เล่ม ๑๓๗ ตอนพิเศษ ๑๖๙ ง ราชกิจจานุเบกษา ๒๔ กรกฎาคม ๒๕๖๓

ประกาศกรมเจ้าท่า

ที่ ๑๑๘/๒๕๖๓

เรื่อง ประมวลข้อบังคับว่าด้วยการขนส่งสินค้าเทกองที่เป็นของแข็งในระวางทางทะเลระหว่างประเทศ International Maritime Solid Bulk Cargoes Code (IMSBC Code)

สืบเนื่องจากอันตรายที่เกิดจากการขนส่งสินค้าเทกองที่เป็นของแข็งในระวางหรือการจัดเก็บสินค้าในระวางที่ไม่เหมาะสม อาจส่งผลให้เกิดการสูญเสียหรือการลดลงของความทรงตัวของเรือในระหว่างเดินทาง ปฏิกิริยาทางเคมีของตัวสินค้า ตลอดจนเกิดความเสียหายต่อโครงสร้างของเรือได้ องค์การทางทะเลระหว่างประเทศจึงได้จัดทำประมวลข้อบังคับว่าด้วยการขนส่งสินค้าเทกองที่เป็นของแข็งในระวางทางทะเลระหว่างประเทศ (International Maritime Solid Bulk Cargoes Code : IMSBC Code) โดยประมวลข้อบังคับดังกล่าวมีวัตถุประสงค์เพื่อกำกับดูแลและอำนวยความสะดวกให้กับผู้เกี่ยวข้องดำเนินการเกี่ยวกับการจัดเก็บและการขนส่งสินค้าประเภทดังกล่าวได้อย่างปลอดภัย โดยการจัดทำและเผยแพร่ข้อมูลเกี่ยวกับอันตราย ตลอดจนคำแนะนำเกี่ยวกับขั้นตอนที่จะนำมาใช้เมื่อมีการขนส่งสินค้าเทกองที่เป็นของแข็งในระวางทางทะเลระหว่างประเทศ ซึ่งประมวลดังกล่าวมีสถานะเป็นตราสารภาคบังคับ (mandatory instrument) ที่ออกตามความอนุสัญญาระหว่างประเทศว่าด้วยความปลอดภัยแห่งชีวิตในทะเล (International Convention for the Safety of Life at Sea : SOLAS (Chapter VI : Carriage of cargoes and oil fuels)) โดยจะต้องมีการติดตามและปรับปรุงให้เป็นปัจจุบันอย่างต่อเนื่อง

กรมเจ้าท่าพิจารณาแล้วเพื่อให้การดำเนินการในกิจกรรมดังกล่าวเป็นไปอย่างปลอดภัย เหมาะสม มีประสิทธิภาพและสอดคล้องกับมาตรฐานที่กำหนดไว้ในอนุสัญญา SOLAS และ IMSBC Code กรมเจ้าท่าเห็นควรประกาศ IMSBC Code เพื่อให้ผู้เกี่ยวข้อง เช่น ผู้ส่ง (Shipper) นายเรือ (Master) ท่าเรือ (Terminal) ฯลฯ ทราบและนำไปปรับใช้ในทางปฏิบัติต่อไป ทั้งนี้ รายละเอียดของ IMSBC Code เป็นไปตามภาคผนวกที่ปรากฏแนบท้ายประกาศนี้

ประกาศ ณ วันที่ ๒๓ มิถุนายน พ.ศ. ๒๕๖๓

วิทยา ยาม่วง

อธิบดีกรมเจ้าท่า

ภาคผนวก

ประมวลข้อบังคับว่าด้วยการขนส่งสินค้าเทกองที่เป็นของแข็ง
ในระวางทางทะเลระหว่างประเทศ (การแก้ไขเพิ่มเติมที่ ๐๕-๑๙)
International Maritime Solid Bulk Cargoes Code (IMSBC Code)
(Amendment 05-19)

THE INTERNATIONAL MARITIME SOLID BULK CARGOES (IMSBC) CODE (AMENDMENT 05-19)

ประมวลข้อบังคับว่าด้วยการขนส่งสินค้าเทกองที่เป็นของแข็งในระวางทางทะเลระหว่างประเทศ (การแก้ไขเพิ่มเติมที่ 05-19)

สารบัญ

ส่วนที่ 1	บทบัญญัติทั่วไป
ส่วนที่ 2	การขนถ่ายสินค้าขึ้นเรือ การขนส่ง และข้อควรระวังเกี่ยวกับการขนถ่ายสินค้าออกจากเรือ
ส่วนที่ 3	ความปลอดภัยของบุคคลและเรือ
ส่วนที่ 4	การประเมินการยอมรับสินค้าที่จะขนส่งอย่างปลอดภัย
ส่วนที่ 5	ขั้นตอนการปรับระดับสินค้า
ส่วนที่ 6	วิธีการในการกำหนดมุมกอง
ส่วนที่ 7	สินค้าที่อาจกลายเป็นของเหลว
ส่วนที่ 8	ขั้นตอนการทดสอบของสินค้าที่อาจกลายเป็นของเหลว
ส่วนที่ 9	สิ่งของที่มีอันตรายจากสารเคมี
ส่วนที่ 10	การขนส่งของเสียที่เป็นของแข็งในระวาง
ส่วนที่ 11	บทบัญญัติด้านการรักษาความปลอดภัย
ส่วนที่ 12	ตารางการแปลงค่า Stowage factor
ส่วนที่ 13	การอ้างอิงถึงข้อมูลและคำแนะนำที่เกี่ยวข้อง
ภาคผนวก 1	ตารางเฉพาะรายของสินค้าเทกองที่เป็นของแข็งในระวาง
ภาคผนวก 2	ขั้นตอนการทดสอบในห้องปฏิบัติการ อุปกรณ์และมาตรฐานที่เกี่ยวข้อง
ภาคผนวก 3	คุณสมบัติของสินค้าเทกองที่เป็นของแข็งในระวาง
ภาคผนวก 4	ดัชนี
ภาคผนวก 5	รายชื่อของสินค้าเทกองในสามภาษา (อังกฤษ ฝรั่งเศส และสเปน)

ส่วนที่ 1

บทบัญญัติทั่วไป

1.1 บทนำ

ควรสังเกตว่ามีข้อบังคับระหว่างประเทศและระดับชาติอื่นๆ อยู่ และข้อบังคับเหล่านั้นอาจยอมรับบทบัญญัติทั้งหมดหรือบางส่วนของประมวลข้อบังคับนี้ นอกจากนี้ การท่าเรือและสถาบันอื่นๆ และองค์การควรยอมรับประมวลข้อบังคับนี้ และอาจใช้เป็นพื้นฐานสำหรับการจัดเก็บและการจัดการกฎข้อบังคับภายในพื้นที่การขนถ่ายสินค้าขึ้นและออกจากเรือ

1.2 สินค้าที่มีระบุไว้ในประมวลข้อบังคับ

1.2.1 สินค้าที่โดยทั่วไปขนส่งแบบเทกอง พร้อมกับคำแนะนำเกี่ยวกับคุณสมบัติและวิธีการจัดการ จะมีตารางสำหรับสินค้าในแต่ละรายการ อย่างไรก็ตามตารางเหล่านี้ไม่ครบถ้วนสมบูรณ์ และคุณสมบัติของสินค้าที่แสดงเป็นเพียงแค่คำแนะนำเท่านั้น ดังนั้น ก่อนที่จะทำการขนถ่ายสินค้าขึ้นเรือจึงจำเป็นจะต้องมีข้อมูลที่ถูกต้องเป็นปัจจุบันจากผู้ส่งเกี่ยวกับคุณสมบัติทางกายภาพและทางเคมีของสินค้าที่จะขนส่ง ผู้ส่งต้องให้ข้อมูลที่เหมาะสมเกี่ยวกับสินค้าที่จะขนส่ง

1.2.2 ในกรณีที่สินค้าเทกองที่เป็นของแข็งในระวางมีการระบุไว้โดยเฉพาะในภาคผนวก 1 ของประมวลข้อบังคับนี้ สินค้าดังกล่าวต้องขนส่งตามบทบัญญัติในตาราง นอกเหนือไปจากบทบัญญัติในส่วนที่ 1 ถึง 10 และ 11.1.1 ของประมวลข้อบังคับนี้ นายเรือต้องปรึกษาหน่วยงานของเมืองท่าที่มีการขนถ่ายสินค้าขึ้นเรือและสินค้าออกจากเรือตามความจำเป็นเกี่ยวกับข้อกำหนดที่อาจมีผลบังคับใช้และใช้สำหรับการขนส่งสินค้า

1.3 สินค้าที่ไม่มีระบุไว้ในประมวลข้อบังคับ

1.3.1 ถ้าหากจะมีการขนส่งสินค้าเทกองที่เป็นของแข็งในระวางซึ่งไม่มีระบุไว้ในภาคผนวก 1 ของประมวลข้อบังคับนี้ ก่อนที่จะทำการขนส่ง ผู้ส่งต้องให้ข้อมูลของลักษณะและคุณสมบัติของสินค้าตามส่วนที่ 4 ของประมวลข้อบังคับนี้แก่กรมเจ้าท่าในกรณีที่ประเทศไทยเป็นเมืองท่าที่มีการขนถ่ายสินค้าขึ้นเรือ กรมเจ้าท่าจะประเมินความสามารถในการรับสินค้าเพื่อขนส่งได้อย่างปลอดภัยตามข้อมูลที่ได้รับ

1.3.1.1 เมื่อมีการประเมินว่าสินค้าเทกองที่เป็นของแข็งในระวางที่จะขนส่ง อาจมีอันตรายตามที่กำหนดเป็นกลุ่ม A หรือ B ของประมวลข้อบังคับนี้ตามที่กำหนดไว้ใน 1.7 จะต้องมีการขอคำแนะนำจากหน่วยงานที่มีอำนาจของเมืองท่าที่มีการขนถ่ายสินค้าออกจากเรือ และรัฐเจ้าของธง จากนั้นกรมเจ้าท่า หน่วยงานที่มีอำนาจของเมืองท่าที่มีการขนถ่ายสินค้าออกจากเรือ และรัฐเจ้าของธงจะกำหนดเงื่อนไขที่เหมาะสมเบื้องต้นสำหรับการขนส่งสินค้านี้

1.3.1.2 เมื่อมีการประเมินว่าสินค้าเทกองที่เป็นของแข็งในระวางที่จะขนส่งไม่มีอันตรายที่เฉพาะเจาะจงสำหรับการขนส่ง การขนส่งสินค้านี้จะได้รับอนุญาต หน่วยงานที่มีอำนาจของเมืองท่าที่มีการขนถ่ายสินค้าออกจากเรือ และรัฐเจ้าของธงจะต้องได้รับแจ้งถึงการอนุญาตนั้น

1.3.2 กรมเจ้าท่าจะต้องจัดให้มีใบรับรองแก่นายเรือที่ระบุถึงลักษณะของสินค้าและเงื่อนไขที่จำเป็นสำหรับการขนส่งและการวิธีการจัดการสินค้า กรมเจ้าท่าต้องส่งคำร้องไปยังองค์การทางทะเลระหว่างประเทศภายในหนึ่งปีหลังจากที่ออกใบรับรอง เพื่อรวมสินค้าเทกองที่เป็นของแข็งในระวางนี้เข้าไปไว้ในภาคผนวก 1 ของประมวลข้อบังคับนี้ รูปแบบของคำร้องนี้จะเป็นไปตามที่ระบุไว้ใน 1.3.3

1.3.3 รูปแบบของคุณสมบัติของสินค้าที่ไม่มีระบุไว้ในประมวลข้อบังคับ และเงื่อนไขสำหรับการขนส่ง (อ้างอิงถึง Guidelines for the submission of information and completion of the format for the properties of cargoes not listed in the International Maritime Solid Bulk Cargoes (IMSBC) Code and their conditions of carriage (MSC.1/Circ.1453/Rev.1))

รายชื่อของสินค้าเทกองชั่วคราว (ตัวพิมพ์ใหญ่)

คำบรรยาย (บรรยายถึงสินค้า)

ลักษณะ (เติมข้อมูลในตาราง)

คุณสมบัติทางกายภาพ			
ขนาด	**มุมกอง**	**ความหนาแน่นรวม (กิโลกรัม/ลูกบาศก์เมตร)**	**Stowage factor (ลูกบาศก์เมตร/ตัน)**
การแบ่งชั้นความเป็นอันตราย			
ชั้น	**อันตรายย่อย**	**สิ่งของที่เป็นอันตรายเฉพาะเมื่อบรรทุกในระวาง**	**กลุ่ม**

อันตราย (แจกแจงอันตรายของการขนส่งสินค้า)

(กำหนดประเภทของข้อกำหนดดังต่อไปนี้ หากไม่จำเป็นต้องมีข้อกำหนดให้เขียน "ไม่มีข้อกำหนดพิเศษ")

การจัดเก็บและการจัดแยก

การรักษาความสะอาดของระวาง

ข้อควรระวังเกี่ยวกับสภาพอากาศ

การขนถ่ายสินค้าขึ้นเรือ

ข้อควรระวัง

การระบายอากาศ

การขนส่ง

การขนถ่ายสินค้าลงเรือ

การทำความสะอาด

(ระบุขั้นตอนฉุกเฉินสำหรับการขนส่งสินค้า หากจำเป็น)

ขั้นตอนฉุกเฉิน

อุปกรณ์ฉุกเฉินพิเศษที่ต้องมี
ขั้นตอนฉุกเฉิน **การดำเนินการในกรณีฉุกเฉินเมื่อเกิดเพลิงไหม้** **การปฐมพยาบาลเบื้องต้น**

1.4 การบังคับใช้และการอนุวัติการตามประมวลข้อบังคับนี้

1.4.1 บทบัญญัติในประมวลข้อบังคับนี้ใช้บังคับกับเรือทุกลำที่อนุสัญญาระหว่างประเทศว่าด้วยความปลอดภัยแห่งชีวิตในทะเล (อนุสัญญา SOLAS) และที่แก้ไขเพิ่มเติมมีผลใช้บังคับ และที่บรรทุกสินค้าเทกองที่เป็นของแข็งในระวางตามที่กำหนดไว้ในข้อบังคับที่ 1-1 ของภาค ก ของบทที่ VI ของอนุสัญญา SOLAS

1.4.2 แม้ว่าประมวลข้อบังคับนี้จะเป็นตราสารภาคบังคับภายใต้อนุสัญญา SOLAS บทบัญญัติต่อไปนี้ของประมวลข้อบังคับยังคงเป็นแค่คำแนะนำหรือการให้ข้อมูล

ส่วนที่ 11 บทบัญญัติด้านการรักษาความปลอดภัย (ยกเว้น 11.1.1)

ส่วนที่ 12 ตารางการแปลงค่า Stowage factor

ส่วนที่ 13 การอ้างอิงถึงข้อมูลและคำแนะนำที่เกี่ยวข้อง

ภาคผนวกอื่นๆ นอกเหนือจากภาคผนวก 1 (ตารางเฉพาะรายของสินค้าเทกองที่เป็นของแข็งในระวาง) และภาคผนวก 5 (รายชื่อของสินค้าเทกองในสามภาษา (อังกฤษ ฝรั่งเศส และสเปน)) และ

ข้อความในส่วนของ “คำบรรยาย”“ลักษณะ (นอกเหนือจากการแบ่งชั้นความเป็นอันตราย)” “อันตราย” และ “ขั้นตอนฉุกเฉิน” ของตารางเฉพาะรายของสินค้าเทกองที่เป็นของแข็งในระวางในภาคผนวก 1

1.4.3 ในบางส่วนของประมวลข้อบังคับนี้ได้มีการกำหนดการหน้าที่เฉพาะไว้ แต่ความรับผิดชอบในการดำเนินการในหน้าที่ดังกล่าวไม่ได้มีการมอบหมายให้บุคคลใดเป็นการเฉพาะ ความรับผิดชอบดังกล่าวอาจแตกต่างกันไปตามกฎหมายและจารีตประเพณีของประเทศต่างๆ และอนุสัญญาระหว่างประเทศที่ประเทศเหล่านี้เข้าร่วมเป็นภาคี เพื่อจุดประสงค์ของประมวลข้อบังคับนี้ ไม่มีความจำเป็นต้องทำการมอบหมายความรับผิดชอบนี้ แต่เพียงเพื่อระบุหน้าที่เท่านั้น ดังนั้นจึงเป็นอภิสิทธิ์ของแต่ละรัฐบาลที่จะมอบหมายความรับผิดชอบนี้

1.5 การยกเว้นและมาตรการที่เทียบเท่า

1.5.1 ในกรณีที่ประมวลข้อบังคับนี้กำหนดให้มีการปฏิบัติตามบทบัญญัติเฉพาะสำหรับการขนส่งสินค้าเทกองที่เป็นของแข็งในระวาง กรมเจ้าท่าหรือหน่วยงานที่มีอำนาจ (รัฐเจ้าของเมืองท่าของเมืองท่าต้นทาง

รัฐเจ้าของเมืองท่าของเมืองท่าปลายทาง หรือรัฐเจ้าของธง) อาจอนุญาตบทบัญญัติอื่นใดโดยการยกเว้น หากพอใจว่าบทบัญญัติดังกล่าวนั้นอย่างน้อยมีประสิทธิภาพและปลอดภัยตามที่กำหนดไว้ในประมวลข้อบังคับนี้ การยอมรับการยกเว้นที่ได้รับอนุญาตภายใต้ส่วนนี้โดยหน่วยงานที่มีอำนาจซึ่งไม่ได้เป็นภาคีอยู่ภายใต้ดุลยพินิจของหน่วยงานที่มีอำนาจนั้น ดังนั้น ก่อนการขนส่งใดๆ ที่ได้รับการยกเว้น ผู้รับการยกเว้นจะต้องแจ้งหน่วยงานที่มีอำนาจอื่นๆ ที่เกี่ยวข้อง

1.5.2 กรมเจ้าท่าหรือหน่วยงานที่มีอำนาจซึ่งได้ริเริ่มเกี่ยวกับการยกเว้น

.1 ต้องส่งสำเนาของการยกเว้นดังกล่าวไปยังองค์การทางทะเลระหว่างประเทศ ซึ่งจะได้นำไปเผยแพร่ให้ภาคีอนุสัญญา SOLAS ทราบ และ

.2 ต้องดำเนินการแก้ไขเพิ่มเติมประมวลข้อบังคับนี้ เพื่อรวมบทบัญญัติที่ได้รับการยกเว้นตามความเหมาะสม

1.5.3 ระยะเวลาที่มีผลใช้บังคับของการยกเว้นต้องไม่เกินห้าปีนับจากวันที่ได้รับอนุญาต การยกเว้นที่ไม่ครอบคลุมภายใต้ 1.5.2.2 อาจได้รับการต่ออายุตามบทบัญญัติของส่วนนี้

1.5.4 สำเนาของการยกเว้นหรือสำเนาอิเล็กทรอนิกส์จะต้องถูกเก็บไว้บนเรือแต่ละลำที่ขนส่งสินค้าเทกองที่เป็นของแข็งในระวางตามความเหมาะสม

1.5.5 ข้อมูลการติดต่อของหน่วยงานที่มีอำนาจหลักของประเทศที่เกี่ยวข้อง จะปรากฏอยู่ในเอกสารฉบับอื่นที่ออกโดยองค์การทางทะเลระหว่างประเทศ

1.6 อนุสัญญา

อนุสัญญา SOLAS บทที่ VI ภาค ก และภาค ข และบทที่ VII ภาค ก-1 และที่แก้ไขเพิ่มเติม เกี่ยวข้องกับการขนส่งสินค้าเทกองที่เป็นของแข็งในระวาง และการขนส่งสินค้าอันตรายในรูปแบบของแข็งในระวาง ตามลำดับ และมีการคัดลอกเฉพาะส่วนที่เกี่ยวข้องตามเนื้อหาด้านล่าง เนื้อหาที่ตัดทอนมานี้ได้รวมเอาการแก้ไขเพิ่มเติมที่มีผลบังคับใช้ในวันที่ 1 มกราคม ค.ศ. 2011

“บทที่ VI

การขนส่งสินค้าและน้ำมันเชื้อเพลิง

ภาค ก

บทบัญญัติทั่วไป

ข้อบังคับที่ 1

การใช้บังคับ

1 เว้นแต่จะกำหนดเป็นอย่างอื่น บทนี้ใช้บังคับกับการขนส่งสินค้า (ยกเว้นของเหลวในระวาง ก๊าซในระวาง และลักษณะของการขนส่งที่ครอบคลุมโดยบทอื่นๆ) ซึ่งเป็นอันตรายโดยลักษณะจำเพาะของสินค้านั้นต่อเรือหรือบุคคลบนเรือ โดยอาจต้องมีการกำหนดข้อควรระวังเป็นพิเศษสำหรับเรือทุกลำที่ข้อบังคับปัจจุบัน

ใช้บังคับ และสำหรับเรือสินค้าที่มีขนาดน้อยกว่า 500 ตันกรอสส์ อย่างไรก็ตามสำหรับเรือสินค้าที่มีขนาดน้อยกว่า 500 ตันกรอสส์ ทางการอาจใช้มาตรการที่มีประสิทธิภาพอื่นๆ เพื่อรับรองความปลอดภัยที่จำเป็นสำหรับเรือเหล่านี้ หากพิจารณาแล้วเห็นว่าที่หลบภัยตามธรรมชาติและสภาพของการเดินเรือที่ใช้บังคับ กับข้อกำหนดเฉพาะของภาค ก หรือภาค ข ในบทนี้ไม่มีเหตุผลหรือไม่จำเป็น

2 เพื่อเสริมบทบัญญัติของภาค ก และ ข ของบทนี้ รัฐภาคีแต่ละรัฐจะต้องทำให้มั่นใจว่ามีการจัดหาข้อมูลที่เหมาะสมของสินค้า และการจัดเก็บ และการยึดตรึงสินค้า โดยเฉพาะอย่างยิ่งที่กำหนดถึงข้อควรระวังที่จำเป็นสำหรับการขนส่งสินค้าดังกล่าวอย่างปลอดภัย*

*อ้างอิงถึง

.1 the Code of Safe Practice for Cargo Stowage and Securing (resolution A.714(17), as amended);

.2 the Code of Safe Practice for Ships Carrying Timber Deck Cargoes, 2011 (2011 TDC Code) (resolution A.1048(27)), Guidance note on precautions to be taken by the masters of ships of below 100 metres in length engaged in the carriage of logs (MSC/Circ.525), and Guidance note on precautions to be taken by masters of ships engaged in the carriage of timber cargoes (MSC/Circ.548); and

.3 IMSBC Code (resolution MSC.268(85), as amended).

ข้อบังคับที่ 1-1

คำนิยาม

เพื่อจุดประสงค์ของบทนี้ เว้นแต่จะกำหนดเป็นอย่างอื่น จะใช้คำนิยามดังต่อไปนี้

1 *IMSBC Code* หมายถึง ประมวลข้อบังคับว่าด้วยการขนส่งสินค้าเทกองที่เป็นของแข็งในระวางทางทะเลระหว่างประเทศ ที่คณะกรรมการความปลอดภัยทางทะเลขององค์การทางทะเลระหว่างประเทศรับรองโดยมติ MSC.268(85) ซึ่งอาจมีการแก้ไขเพิ่มเติมโดยองค์การทางทะเลระหว่างประเทศ โดยมีเงื่อนไขว่าการแก้ไขเพิ่มเติมดังกล่าวถูกรับรอง และมีผลบังคับใช้ตามบทบัญญัติของข้อ VIII ของอนุสัญญาปัจจุบันที่เกี่ยวข้องกับขั้นตอนแก้ไขเพิ่มเติมที่ใช้บังคับกับภาคผนวกนอกเหนือจากบทที่ 1

2 *สินค้าเทกองที่เป็นของแข็งในระวาง* หมายถึง สินค้าใดๆ นอกเหนือจากของเหลวหรือก๊าซ ซึ่งประกอบด้วยการรวมตัวกันของอนุภาค เมล็ดเล็กๆ หรือชิ้นส่วนของสิ่งของขนาดใหญ่ใดๆ ซึ่งโดยทั่วไปมีองค์ประกอบที่เหมือนกัน ซึ่งจะถูกขนถ่ายขึ้นเรือโดยตรงไปยังพื้นที่เก็บสินค้าของเรือ โดยปราศจากการบรรจุในรูปแบบใดๆ

ข้อบังคับที่ 1-2

ข้อกำหนดในการขนส่งสินค้าเทกองที่เป็นของแข็งในระวางนอกเหนือจากเมล็ดพืช

การขนส่งสินค้าเทกองที่เป็นของแข็งในระวางนอกเหนือจากเมล็ดพืชจะต้องเป็นไปตามบทบัญญัติที่เกี่ยวข้องของ IMSBC Code

ข้อบังคับที่ 2

ข้อมูลสินค้า

1 ผู้ส่งจะต้องให้ข้อมูลที่เหมาะสมเกี่ยวกับสินค้าแก่นายเรือหรือตัวแทนอย่างเพียงพอล่วงหน้าก่อนการขนถ่ายสินค้าขึ้นเรือ เพื่อทำให้สามารถหามาตรการป้องกันที่อาจจำเป็นสำหรับการจัดเก็บที่เหมาะสมและการขนส่งที่ปลอดภัยของสินค้า ข้อมูลดังกล่าว*จะต้องได้รับการยืนยันเป็นลายลักษณ์อักษร†โดยเอกสารการขนส่งที่เหมาะสมก่อนที่จะขนถ่ายสินค้าขึ้นเรือ

*อ้างอิงถึง Form for cargo information (MSC/Circ.663).

†อ้างอิงถึง Reference to documents in this regulation does not preclude the use of electronic data processing (EDP) and electronic data interchange (EDI) transmission techniques as an aid to paper documentation

2 ข้อมูลสินค้าต้องประกอบด้วย

.1 ในกรณีของสินค้าทั่วไป และสินค้าที่บรรทุกในหน่วยสินค้า คำอธิบายทั่วไปของสินค้า น้ำหนักมวลรวมของสินค้าหรือหน่วยสินค้า และคุณสมบัติพิเศษใดๆ ที่เกี่ยวข้องของสินค้านั้น เพื่อจุดประสงค์ของข้อบังคับนี้ จะต้องมีการจัดหาข้อมูลสินค้าที่กำหนดในบทย่อยที่ 1.9 ของ Code of Safe Practice for Cargo Stowage and Securing ที่รับรองโดยองค์การทางทะเลระหว่างประเทศโดยมติ A.714 (17) ซึ่งอาจมีการแก้ไขเพิ่มเติม การแก้ไขเพิ่มเติมบทย่อยที่ 1.9 ใดๆ ต้องถูกรับรองและมีผลบังคับใช้ตามบทบัญญัติของข้อ VIII ของอนุสัญญาปัจจุบันที่เกี่ยวข้องกับขั้นตอนแก้ไขเพิ่มเติมที่ใช้บังคับกับภาคผนวกนอกเหนือจากบทที่ 1

.2 ในกรณีของสินค้าเทกองที่เป็นของแข็งในระวาง ข้อมูลตามที่กำหนดในส่วนที่ 4 ของ IMSBC Code

3 ก่อนที่จะทำการขนถ่ายหน่วยสินค้าขึ้นเรือ ผู้ส่งจะต้องตรวจสอบให้แน่ใจว่าน้ำหนักมวลรวมของหน่วยดังกล่าวเป็นไปตามน้ำหนักมวลรวมที่รับรองไว้ในเอกสารการขนส่ง

ข้อบังคับที่ 3

การวิเคราะห์ออกซิเจนและอุปกรณ์ตรวจจับก๊าซ

1 เมื่อทำการขนส่งสินค้าเทกองที่เป็นของแข็งในระวางซึ่งมีแนวโน้มที่จะปล่อยก๊าซพิษ หรือก๊าซไวไฟ หรือก่อให้เกิดการสูญเสียออกซิเจนในพื้นที่เก็บสินค้า จะต้องจัดให้มีเครื่องมือที่เหมาะสมสำหรับการตรวจวัดความเข้มข้นของก๊าซหรือออกซิเจนในอากาศ โดยจะต้องมีคำแนะนำโดยละเอียดสำหรับการใช้เครื่องมือดังกล่าว เครื่องมือดังกล่าวต้องเป็นไปตามความพึงพอใจของทางการ

2 ทางการจะต้องดำเนินการเพื่อให้มั่นใจว่าลูกเรือของเรือได้รับการฝึกอบรมการใช้เครื่องมือดังกล่าว

ข้อบังคับที่ 4

*การใช้ยาปราบศัตรูพืชในเรือ**

จะต้องมีการดำเนินการเกี่ยวกับข้อควรระวังที่เหมาะสมในการใช้ยาปราบศัตรูพืชในเรือ โดยเฉพาะเพื่อจุดประสงค์ในการรมควัน

*อ้างอิงถึง

.1 the *Revised Recommendations on the safe use of pesticides in ships* (MSC.1/Circ.1358);

.2 the *Recommendations on the safe use of pesticides in ships applicable to the fumigation of cargo holds* (MSC.1/Circ.1264, as amended by MSC.1/Circ.1396); and

.3 the *Revised Recommendations on the safe use of pesticides in ships applicable to the fumigation of cargo transport units* (MSC.1/Circ.1361).

ข้อบังคับที่ 5

การจัดเก็บและการยึดตรึงสินค้า

1 สินค้า หน่วยสินค้า† และหน่วยขนส่งสินค้า‡ที่บรรทุกบนหรือใต้ดาดฟ้าจะต้องถูกขนถ่ายขึ้นเรือ จัดเก็บ และยึดตรึง เพื่อป้องกันความเสียหายหรืออันตรายต่อเรือและบุคคลบนเรือ และการสูญหายของสินค้าเท่าที่จะสามารถปฏิบัติได้ตลอดการเดินทาง

†อ้างอิงถึง the Code of Safe Practice for Cargo Stowage and Securing (resolution A.714(17), as amended).

‡อ้างอิงถึง the International Maritime Dangerous Goods (IMDG) Code (resolution MSC.122(75), as amended).

2 สินค้า หน่วยสินค้า และหน่วยขนส่งสินค้าจะต้องได้รับการบรรจุ และยึดตรึงภายในหน่วยเพื่อป้องกันความเสียหายหรืออันตรายต่อเรือและบุคคลบนเรือตลอดการเดินทาง

3 จะต้องมีการดำเนินการเกี่ยวกับข้อควรระวังที่เหมาะสมระหว่างการขนถ่ายสินค้าขึ้นเรือ และการขนส่งสินค้าที่มีน้ำหนักมาก หรือสินค้าที่มีขนาดทางกายภาพที่ไม่ปกติ เพื่อให้แน่ใจว่าไม่เกิดความเสียหายต่อโครงสร้างของเรือ และเพื่อรักษาความทรงตัวที่เหมาะสมของเรือตลอดการเดินทาง

4 จะต้องมีการดำเนินการเกี่ยวกับข้อควรระวังที่เหมาะสมระหว่างการขนถ่ายสินค้าขึ้นเรือ และการขนส่งหน่วยสินค้าและหน่วยขนส่งสินค้าบนเรือบรรทุกยานพาหนะล้อเลื่อน โดยเฉพาะการจัดการการยึดตรึงบนเรือดังกล่าว และบนหน่วยสินค้าและหน่วยขนส่งสินค้า และเกี่ยวกับความแข็งแรงของจุดที่ยึดตรึงหรือผูกรัด

5 ตู้คอนเทนเนอร์จะต้องไม่ถูกบรรจุเกินกว่าน้ำหนักมากที่สุดที่ระบุไว้บนป้ายอนุมัติความปลอดภัยภายใต้อนุสัญญาระหว่างประเทศว่าด้วยคอนเทนเนอร์ที่ปลอดภัย (International Convention for Safe Containers; CSC) และที่แก้ไขเพิ่มเติม

6 สินค้าทุกประเภทที่นอกเหนือจากของแข็งและของเหลวในระวาง หน่วยสินค้า และหน่วยขนส่งสินค้าจะต้องถูกขนถ่ายขึ้นเรือ จัดเก็บ และยึดตรึงตลอดการเดินทาง ตามคู่มือการยึดตรึงสินค้าที่ได้รับการอนุมัติจากทางการ ในเรือที่มีพื้นที่บรรทุกสินค้ายานพาหนะล้อเลื่อนที่กำหนดไว้ตามข้อบังคับที่ II-2/3.41 การยึดตรึงสินค้า หน่วยสินค้า และหน่วยขนส่งสินค้าดังกล่าวทั้งหมดตามคู่มือการยึดตรึงสินค้า จะต้องดำเนินการให้แล้วเสร็จก่อนเรือจะออกจากท่า คู่มือการยึดตรึงสินค้าจะต้องจัดทำขึ้นให้เป็นมาตรฐานอย่างน้อยเทียบเท่ากับแนวทางที่เกี่ยวข้องที่จัดทำโดยองค์การทางทะเลระหว่างประเทศ*

*อ้างอิงถึง *Revised Guidelines for the preparation of the Cargo Securing Manual* (MSC.1/Circ.1353/Rev.1).

ภาค ข

บทบัญญัติพิเศษสำหรับสินค้าเทกองที่เป็นของแข็งในระวาง

ข้อบังคับที่ 6

การยอมรับการขนส่งสินค้า

1 ก่อนที่จะทำการขนถ่ายสินค้าที่เป็นของแข็งในระวางขึ้นเรือ นายเรือต้องได้รับข้อมูลความทรงตัวของเรือที่มีเนื้อหาครบถ้วน และการกระจายตัวของสินค้าสำหรับสภาพการขนถ่ายสินค้าขึ้นเรือที่เป็นมาตรฐาน วิธีการในการจัดหาให้ข้อมูลดังกล่าวต้องเป็นไปตามความพึงพอใจของทางการ†

†อ้างอิงถึง SOLAS regulation II-1/5-1 on Stability information to be supplied to the master.

ข้อบังคับที่ 7

การขนถ่ายสินค้าขึ้นเรือ การขนถ่ายสินค้าออกจากเรือ และการจัดเก็บสินค้าเทกองที่เป็นของแข็งในระวาง‡

‡อ้างอิงถึง the *Code of Practice for the Safe Loading and Unloading of Bulk Carriers* (BLU Code) (resolution A.862(20), as amended).

1 เพื่อจุดประสงค์ของข้อบังคับนี้ ตัวแทนของท่าเรือหมายถึง บุคคลที่ได้รับการแต่งตั้งจากท่าเรือหรือสิ่งอำนวยความสะดวกอื่นๆ ที่ซึ่งเรือทำการขนถ่ายสินค้าขึ้นเรือหรือออกจากเรือ ผู้ที่มีความรับผิดชอบในการปฏิบัติการที่ดำเนินการโดยท่าเรือหรือสิ่งอำนวยความสะดวกนั้น ๆ เกี่ยวกับเรือลำนั้น

2 เพื่อให้นายเรือสามารถป้องกันการรับแรงที่มากเกินไปของโครงสร้างเรือ เรือจะต้องมีคู่มือที่เขียนด้วยภาษาซึ่งนายประจำเรือผู้ซึ่งรับผิดชอบในการปฏิบัติการสินค้าคุ้นเคย ถ้าภาษาที่เขียนไม่ใช่ภาษาอังกฤษ เรือจะต้องจัดให้มีคู่มือที่เขียนด้วยภาษาอังกฤษ คู่มือจะต้องมีข้อมูลอย่างน้อยดังนี้

.1 ข้อมูลความทรงตัวตามที่กำหนดในกฎข้อบังคับที่ II-1/5-1

.2 อัตราในการสูบถ่ายและความจุของน้ำอับเฉาเรือ

.3 ค่าสูงสุดที่ยอมรับได้ในการบรรทุกต่อหน่วยพื้นที่ของแผ่นเหล็กด้านบนพื้นระวางสินค้า

.4 ค่าสูงสุดที่ยอมรับได้ในการบรรทุกต่อระวางสินค้า

.5 คำแนะนำทั่วไปในการขนถ่ายสินค้าขึ้นและออกจากเรือซึ่งเกี่ยวกับความแข็งแรงของโครงสร้างเรือ รวมถึงข้อจำกัดใดๆ ในสภาพการปฏิบัติงานที่เป็นอันตรายมากที่สุดระหว่างการขนถ่ายสินค้าขึ้นเรือ การขนถ่ายสินค้าออกจากเรือ การถ่วงน้ำอับเฉาเรือ และการเดินเรือ

.6 ข้อจำกัดพิเศษใดๆ เช่น ข้อจำกัดในสภาพการปฏิบัติงานที่เป็นอันตรายมากที่สุดที่ถูกกำหนดโดยทางการหรือองค์กรที่ได้รับการยอมรับ (ถ้ามี) และ

.7 แรงสูงสุดที่ยอมรับได้และโมเนนต์ของตัวเรือในระหว่างการขนถ่ายสินค้าขึ้นเรือ การขนถ่ายสินค้าออกจากเรือ และการเดินเรือ เมื่อมีการกำหนดให้คำนวณความแข็งแรง

3 ก่อนที่จะมีการขนถ่ายสินค้าสินค้าเทกองที่เป็นของแข็งในระวาง นายเรือและตัวแทนของท่าเรือต้องตกลงในแผน* ซึ่งต้องให้แน่ใจว่าค่าแรงที่ยอมรับได้และโมเนนต์ของเรือไม่เกินค่าในระหว่างการขนถ่ายสินค้าขึ้นหรือออกจากเรือ และต้องรวมถึงลำดับเหตุการณ์ ปริมาณและอัตราของการขนถ่ายสินค้าขึ้นหรือออกจากเรือ โดยพิจารณาถึงความเร็วของการขนถ่ายสินค้าขึ้นหรือออกจากเรือ จำนวนของการเทสินค้าและความสามารถในการสูบหรือถ่ายน้ำอับเฉาเรือ แผนดังกล่าวและการแก้ไขเพิ่มเติมในภายหลังใดๆ ต้องเสนอต่อเจ้าหน้าที่ที่เหมาะสมของรัฐเมืองท่า

*อ้างอิงถึง the *Code of Practice for the Safe Loading and Unloading of Bulk Carriers* (BLU Code) (resolution A.862(20), as amended).

4 นายเรือและตัวแทนของท่าเรือต้องมั่นใจว่าการปฏิบัติการขนถ่ายสินค้าขึ้นและออกจากเรือดำเนินการสอดคล้องกับแผนที่ได้ตกลงกัน

5 ถ้าในระหว่างการขนถ่ายสินค้าขึ้นหรือออกจากเรือ ข้อจำกัดใดๆ ของเรือตามที่อ้างถึงในวรรคที่ 2 มีค่าเกินหรือหรือมีแนวโน้มที่จะเกิน ถ้าการขนถ่ายสินค้าขึ้นหรือออกจากเรือยังคงดำเนินต่อไป นายเรือมีสิทธิ์ในการระงับการปฏิบัติการและมีหน้าที่ต้องแจ้งต่อเจ้าหน้าที่ที่เหมาะสมของรัฐเมืองท่า นายเรือและตัวแทนของท่าเรือต้องมั่นใจว่าได้มีการดำเนินการแก้ไข เมื่อขนถ่ายสินค้าออกจากเรือ นายเรือและตัวแทนของท่าเรือต้องมั่นใจว่าวิธีการขนถ่ายสินค้าออกจากเรือจะไม่ทำให้โครงสร้างของเรือได้รับความเสียหาย

6 นายเรือต้องมั่นใจว่าคนประจำเรือได้ควบคุมการปฏิบัติการสินค้าอย่างต่อเนื่อง ถ้าเป็นไปได้ต้องตรวจสอบอัตราการกินน้ำลึกของเรืออย่างสม่ำเสมอในระหว่างการขนถ่ายสินค้าขึ้นหรือออกจากเรือเพื่อยืนยันค่าน้ำหนักที่ได้รับ อัตรากินน้ำลึกและน้ำหนักต้องถูกบันทึกลงในสมุดปูมสินค้า ถ้าหากตรวจพบว่ามีความคลาดเคลื่อนอย่างมีนัยสำคัญผิดไปจากแผนที่ได้ตกลงกัน จะต้องทำการปรับแต่งปฏิบัติการขนถ่ายสินค้าหรือการถ่วงน้ำอับเฉาเรือหรือปฏิบัติการทั้งสอง เพื่อให้มั่นใจว่ามีการแก้ไขความคลาดเคลื่อนดังกล่าว

บทที่ 7

การขนส่งสินค้าอันตราย†

†อ้างอิงถึง *General principles for ship reporting systems and ship reporting requirements, including guidelines for reporting incidents involving dangerous goods, harmful substances and/or marine pollutants* (resolution A.851(20), as amended).

ภาค ก-1

การขนส่งสินค้าอันตรายในรูปแบบของแข็งในระวาง

ข้อบังคับที่ 7

คำนิยาม

สินค้าอันตรายในรูปแบบของแข็งในระวาง หมายถึง สิ่งของใดๆ นอกเหนือจากของเหลวหรือก๊าซ ซึ่งประกอบด้วยการรวมตัวกันของอนุภาค เมล็ดเล็กๆ หรือชิ้นส่วนของสิ่งของขนาดใหญ่ใดๆ ซึ่งโดยทั่วไปมีองค์ประกอบที่เหมือนกัน ซึ่งถูกครอบคลุมโดย IMDG Code และถูกขนถ่ายขึ้นเรือโดยตรงไปยังพื้นที่เก็บสินค้าของเรือโดยปราศจากการบรรจุในรูปแบบใดๆ และรวมถึงสิ่งของดังกล่าวที่อยู่ในเรือลำเลียงบนเรือที่บรรทุกเรือลำเลียง

ข้อบังคับที่ 7-1

*การใช้บังคับ**

1 เว้นแต่จะกำหนดเป็นอย่างอื่น ภาคนี้ใช้บังคับกับการขนส่งสินค้าอันตรายในรูปแบบของแข็งในระวางสำหรับเรือทุกลำที่ข้อบังคับปัจจุบันใช้บังคับ และสำหรับเรือสินค้าที่มีขนาดน้อยกว่า 500 ตันกรอสส์

2 ห้ามไม่ให้มีการขนส่งสินค้าอันตรายในรูปแบบของแข็งในระวาง เว้นแต่จะดำเนินการตามบทบัญญัติของภาคนี้

3 เพื่อเสริมบทบัญญัติของภาคนี้ รัฐภาคีแต่ละรัฐจะต้องออกคำแนะนำเกี่ยวกับการตอบสนองต่อเหตุการณ์ฉุกเฉินและการปฐมพยาบาลที่เกี่ยวข้องกับเหตุการณ์ที่เกี่ยวข้องกับสินค้าอันตรายในรูปแบบของแข็งในระวาง โดยจะต้องพิจารณาแนวทางที่จัดทำโดยองค์การทางทะเลระหว่างประเทศ†

*อ้างอิงถึง SOLAS regulation II-2/19, which contains special requirements for ships carrying dangerous goods

†อ้างอิงถึง the *Medical First Aid Guide for Use in Accidents involving Dangerous Goods* (MFAG) which is reproduced in the Supplement to the IMDG Code

ข้อบังคับที่ 7-2

เอกสาร

1 เอกสารทั้งหมดที่เกี่ยวข้องกับการขนส่งสินค้าอันตรายในรูปแบบของแข็งในระวางทางทะเล จะต้องใช้รายชื่อของสินค้าเทกอง (Bulk Cargo Shipping Name) ของสินค้า (ต้องไม่ใช้ชื่อทางการค้าอย่างเดียว)

2 เรือทุกลำที่บรรทุกสินค้าอันตรายในรูปแบบของแข็งในระวาง จะต้องมีรายการพิเศษหรือรายการสินค้าอันตรายบนเรือและตำแหน่งของสินค้านั้น แผนจัดการระวางภายในเรือสินค้าอย่างละเอียดที่ระบุชั้นและตำแหน่งของสินค้าอันตรายทั้งหมดบนเรืออาจถูกนำมาใช้แทนรายการพิเศษหรือรายการสินค้าข้างต้นได้ จะต้องจัดให้มีสำเนาของเอกสารเหล่านี้หนึ่งชุดสำหรับบุคคลหรือองค์กรที่ถูกแต่งตั้งโดยหน่วยงานของรัฐเมืองท่าก่อนที่เรือจะออกเดินทาง

ข้อบังคับที่ 7-3

ข้อกำหนดในการจัดเก็บและจัดแยก

1 สินค้าอันตรายในรูปแบบของแข็งในระวางต้องถูกขนถ่ายขึ้นเรือ และจัดเก็บอย่างปลอดภัยและเหมาะสมตามลักษณะของสินค้า สินค้าที่เข้ากันไม่ได้ต้องถูกจัดแยกออกจากกัน

2 สินค้าอันตรายในรูปแบบของแข็งในระวางซึ่งมีแนวโน้มที่จะเกิดความร้อนหรือการเผาไหม้เอง จะต้องไม่ถูกขนส่ง เว้นแต่จะต้องมีการระวังที่เหมาะสมเพื่อลดโอกาสในการเกิดไฟไหม้

3 สินค้าอันตรายในรูปแบบของแข็งในระวางซึ่งปล่อยไอที่เป็นอันตรายต้องถูกจัดเก็บในพื้นที่เก็บสินค้าที่มีการระบายอากาศที่ดี

ข้อบังคับที่ 7-4

การรายงานอุบัติเหตุที่เกี่ยวกับสินค้าอันตราย

1 เมื่อมีเหตุอุบัติเกิดขึ้นเกี่ยวกับการสูญเสียหรือมีแนวโน้มที่จะสูญเสียสินค้าอันตรายในรูปแบบของแข็งในระวางลงสู่ทะเล นายเรือหรือบุคคลอื่นที่มีหน้าที่รับผิดชอบบนเรือต้องรายงานรายละเอียดของอุบัติเหตุดังกล่าวโดยไม่ล่าช้าและในขอบเขตที่กระทำได้อย่างเต็มที่ไปยังรัฐชายฝั่งที่อยู่ใกล้ที่สุด รายงานจะต้องจัดทำขึ้นตามหลักการทั่วไปและแนวทางที่จัดทำโดยองค์การทางทะเลระหว่างประเทศ*

*อ้างอิงถึง *General principles for ship reporting systems and ship reporting requirements, including Guidelines for reporting incidents involving dangerous goods, harmful substances and/or marine pollutants* (resolution A.851(20), as amended).

2 ในกรณีเหตุการณ์ที่เรือที่อ้างถึงตามวรรค 1 ถูกสละทิ้ง หรือในกรณีที่รายงานของเรือนั้นยังไม่สมบูรณ์หรือหาข้อมูลไม่ได้ บริษัทที่ถูกกำหนดตามข้อบังคับที่ IX/1.2 จะต้องรับหน้าที่ของนายเรือที่ถูกกำหนดโดยข้อบังคับนี้ในขอบเขตที่กระทำได้อย่างเต็มที่

ข้อบังคับที่ 7-5

ข้อกำหนดสำหรับการขนส่งสินค้าอันตรายในรูปแบบของแข็งในระวาง

การขนส่งสินค้าอันตรายในรูปแบบของแข็งในระวางต้องเป็นไปตามบทบัญญัติที่เกี่ยวข้องของ IMSBC Code ตามที่กำหนดไว้ในข้อบังคับที่ VI/1-1.1.”

1.7 คำนิยาม

เพื่อจุดประสงค์ของประมวลข้อบังคับนี้ เว้นแต่จะกำหนดเป็นอย่างอื่น จะใช้คำนิยามดังต่อไปนี้

มุมกอง หมายถึง มุมชันสูงสุดของสิ่งของที่เป็นเม็ดเล็กๆ ที่ไม่เกาะตัวกัน (กล่าวคือ การไหลแบบอิสระ) วัดจากมุมระหว่างระนาบแนวนอนและความลาดเอียงของสิ่งของดังกล่าว

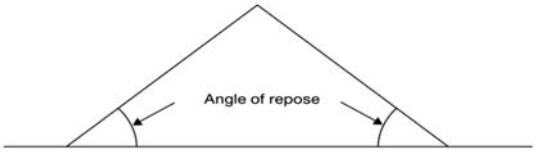

รายชื่อของสินค้าเทกอง (BCSN) ระบุถึงสินค้าเทกองระหว่างการขนส่งทางทะเล เมื่อสินค้าแสดงอยู่ในประมวลข้อบังคับนี้ รายชื่อของสินค้าเทกองจะถูกระบุด้วยตัวอักษรพิมพ์ใหญ่ในตารางเฉพาะรายหรือในดัชนี เมื่อสินค้าเป็นสินค้าอันตรายตามที่กำหนดไว้ในประมวลข้อบังคับระหว่างประเทศว่าด้วยความปลอดภัยในการขนส่งสินค้าอันตรายทางน้ำ (IMDG Code) ตามที่กำหนดไว้ในอนุสัญญา SOLAS บทที่ VII ข้อบังคับ 1.1 ให้อ้างอิงถึง 4.1.1

ความหนาแน่นรวม หมายถึง น้ำหนักของของแข็ง อากาศ และน้ำต่อหน่วยปริมาตร โดยทั่วไปความหนาแน่นรวมจะแสดงเป็นกิโลกรัมต่อลูกบาศก์เมตร (kg/m^3) ช่องว่างในสินค้าอาจถูกเติมด้วยอากาศและน้ำ

พื้นที่เก็บสินค้า หมายถึง พื้นที่ใดๆ ในเรือที่กำหนดให้สำหรับบรรทุกสินค้า

สินค้าที่อาจกลายเป็นของเหลว หมายถึง สินค้าที่มีสัดส่วนของอนุภาคละเอียดและปริมาณความชื้นบ้าง สินค้าอาจกลายเป็นของเหลวถ้าขนส่งในกรณีที่มีปริมาณความชื้นเกินขีดจำกัดของความชื้นที่สามารถขนส่งได้

สิ่งของที่เกาะตัวกัน หมายถึง สิ่งของที่นอกเหนือจากสิ่งของที่ไม่เกาะตัวกัน

หน่วยงานที่มีอำนาจ หมายถึง หน่วยงานกำกับดูแลระดับชาติหรือหน่วยงานที่ได้รับมอบหมายหรือได้รับการยอมรับเพื่อวัตถุประสงค์ใดๆ ที่เกี่ยวข้องกับประมวลข้อบังคับนี้ หน่วยงานที่มีอำนาจต้องปฏิบัติงานอย่างอิสระจากผู้ส่ง

คอนเซนเตรท หมายถึง วัสดุที่ได้มาจากแร่ธรรมชาติโดยกระบวนการของการเพิ่มคุณค่าหรือการปรับปรุงคุณภาพโดยการแยกทางกายภาพหรือทางเคมี และการกำจัดส่วนประกอบที่ไม่พึงประสงค์

สินค้าที่จะขนส่ง หมายถึง สินค้าเทกองที่เป็นของแข็งในระวางที่นำเสนอโดยผู้ส่งเพื่อทำการขนส่ง

จุดความชื้นไหล หมายถึง ปริมาณร้อยละของความชื้นที่ภาวะลื่นไหลก่อตัวภายใต้วิธีการทดสอบที่กำหนดในตัวอย่างที่เป็นตัวแทนของสิ่งของ (ดูวรรค 1 ของภาคผนวก 2)

ภาวะลื่นไหล หมายถึง สถานะที่เกิดขึ้นเมื่อมวลของสิ่งของที่เป็นเม็ดเล็กๆ อิ่มตัวด้วยของเหลว ภายใต้อิทธิพลของกำลังภายนอก เช่น การสั่นสะเทือน การกระทบ หรือการเคลื่อนที่ของเรือ ในระดับที่มันสูญเสียความแข็งแรงทางแนวเฉือนภายในและทำตัวเหมือนของเหลว

GHS หมายถึง Globally Harmonized System of Classification and Labelling of Chemicals ฉบับแก้ไขครั้งที่ 7 ที่เผยแพร่โดยองค์การสหประชาชาติตามเอกสาร ST/SG/AC.10 /30/Rev.7

กลุ่ม เอ ประกอบด้วยสินค้าที่อาจกลายเป็นของเหลว ถ้าขนส่งในกรณีที่มีปริมาณความชื้นเกินขีดจำกัดของความชื้นที่สามารถขนส่งได้

กลุ่ม บี ประกอบด้วยสินค้าที่มีอันตรายจากสารเคมี ซึ่งอาจก่อให้เกิดสถานการณ์อันตรายบนเรือ

กลุ่ม ซี ประกอบด้วยสินค้าที่ไม่กลายเป็นของเหลว (กลุ่ม เอ) หรือไม่มีอันตรายจากสารเคมี (กลุ่ม บี)

สินค้าเทกองที่เป็นของแข็งในระวางที่มีความหนาแน่นสูง หมายถึง สินค้าเทกองที่เป็นของแข็งในระวางที่มี stowage factor ที่ 0.56 m^3/t หรือน้อยกว่า

IMDG Code หมายถึง ประมวลข้อบังคับระหว่างประเทศว่าด้วยความปลอดภัยในการขนส่งสินค้าอันตรายทางน้ำที่รับรองโดยคณะกรรมการความปลอดภัยทางทะเลขององค์การทางทะเลระหว่างประเทศโดย Resolution MSC.122 (75) ซึ่งอาจมีการแก้ไขเพิ่มเติมโดยองค์การทางทะเลระหว่างประเทศ

สิ่งของที่เข้ากันไม่ได้ หมายถึง สิ่งของที่อาจทำปฏิกิริยาอันตรายเมื่อผสมกัน สิ่งของเหล่านี้อยู่ภายใต้ข้อกำหนดของการจัดแยกใน 9.3 และตารางสำหรับสินค้าเฉพาะรายที่จัดอยู่ในกลุ่ม บี

ISPS Code หมายถึง ประมวลข้อบังคับว่าด้วยการรักษาความปลอดภัยของเรือและท่าเรือระหว่างประเทศ ประกอบด้วยภาค ก (บทบัญญัติที่เป็นภาคบังคับ) และภาค ข (บทบัญญัติที่เป็นคำแนะนำ) ที่รับรองเมื่อวันที่ 12 ธันวาคม พ.ศ. 2545 โดยมติที่ 2 ของการประชุมรัฐภาคีของอนุสัญญาระหว่างประเทศว่าด้วยความปลอดภัยแห่งชีวิตในทะเล ค.ศ. 1974 ซึ่งอาจมีการแก้ไขเพิ่มเติมโดยองค์การทางทะเลระหว่างประเทศ

คู่มือการทดสอบและเกณฑ์ หมายถึง สิ่งพิมพ์ขององค์การสหประชาชาติที่มีชื่อว่า “คำแนะนำเกี่ยวกับการขนส่งสินค้าอันตรายคู่มือการทดสอบและเกณฑ์”ฉบับแก้ไขครั้งที่ 6 (ST/SG/AC.10/11/Rev.6/Amendment 1)

สิ่งของที่เป็นอันตรายเฉพาะเมื่อบรรทุกในระวาง (MHB) หมายถึง สิ่งของที่อาจมีอันตรายจากสารเคมีเมื่อขนส่งในระวาง นอกเหนือจากสิ่งของที่จัดเป็นสินค้าอันตรายตาม IMDG Code

ปริมาณความชื้น หมายถึง ส่วนของตัวอย่างที่เป็นตัวแทนที่ประกอบด้วยน้ำ น้ำแข็ง หรือของเหลวอื่นๆ ที่แสดงเป็นอัตราร้อยละของมวลเปียกทั้งหมดของตัวอย่างนั้น

การเคลื่อนย้ายของความชื้น หมายถึง การเคลื่อนที่ของความชื้นที่มีอยู่ในสินค้าโดยการนอนก้นและรวมกันของสินค้าเนื่องจากการสั่นสะเทือนและการเคลื่อนไหวของเรือ น้ำจะถูกแทนที่อย่างต่อเนื่องซึ่งอาจส่งผลให้สินค้าบางส่วนหรือทั้งหมดเกิดภาวะลื่นไหล

สิ่งของที่ไม่เกาะตัวกัน หมายถึง สิ่งของแห้งที่เคลื่อนตัวได้โดยง่าย เนื่องจากการเลื่อนในระหว่างการขนส่งตามที่ระบุไว้ในภาคผนวก 3 วรรค 1 “คุณสมบัติของสินค้าเทกองที่เป็นของแข็งในระวาง”

แหล่งกำเนิดที่อาจเกิดประกายไฟ หมายถึง แต่ไม่จำกัดเพียง การจุดไฟ ไอเสียจากเครื่องจักร ปล่องควันในครัว ปลั๊กไฟและอุปกรณ์ไฟฟ้า ยกเว้นว่าเป็นประเภทที่ได้รับการรับรองว่าปลอดภัย (กรณีของพื้นที่เก็บสินค้าให้อ้างอิงถึงอนุสัญญา SOLAS II-2/19.3.2)

ตัวอย่างที่เป็นตัวแทนสินค้า หมายถึง ตัวอย่างของปริมาณที่เพียงพอสำหรับวัตถุประสงค์ในการทดสอบคุณสมบัติทางกายภาพและทางเคมีของสินค้าที่จะขนส่งเพื่อให้เป็นไปตามข้อกำหนดที่ระบุ

ผู้ส่ง หมายถึง บุคคลใดๆ ผู้ซึ่ง หรือโดยชื่อ หรือในนาม ที่ได้ทำสัญญารับขนของทางทะเลกับผู้ขนส่ง หรือบุคคลใดๆ ผู้ซึ่ง หรือโดยชื่อ หรือในนามที่สินค้าถูกส่งไปตามจริงยังผู้ขนส่งตามสัญญารับขนของทางทะเล

สินค้าเทกองที่เป็นของแข็งในระวาง หมายถึง สินค้าใดๆ นอกเหนือจากของเหลวหรือก๊าซ ซึ่งประกอบด้วยการรวมตัวกันของอนุภาค เมล็ดเล็กๆ หรือชิ้นส่วนของสิ่งของขนาดใหญ่ใดๆ ซึ่งโดยทั่วไปมีองค์ประกอบที่เหมือนกัน ซึ่งจะถูกขนถ่ายขึ้นเรือโดยตรงไปยังพื้นที่เก็บสินค้าของเรือ โดยปราศจากการบรรจุในรูปแบบใดๆ

แหล่งกำเนิดความร้อน หมายถึง โครงสร้างของเรือซึ่งร้อนที่อุณหภูมิพื้นผิวอาจเกิน 55 องศาเซลเซียส ตัวอย่างของโครงสร้างดังกล่าว เช่น ท่อไอน้ำ ขดลวดทำความร้อน ผนังด้านบนหรือด้านข้างของถังเชื้อเพลิงและถังสินค้า และฝากั้นของห้องเครื่อง

Stowage factor หมายถึง ตัวเลขที่แสดงเป็นจำนวนของลูกบาศก์เมตรที่ซึ่งสินค้าขนาดหนึ่งตันจะกินเนื้อที่

ขีดจำกัดของความชื้นที่สามารถขนส่งได้ (TML) ของสินค้าที่อาจกลายเป็นของเหลว หมายถึง ปริมาณความชื้นสูงสุดของสินค้าซึ่งถือว่าปลอดภัยสำหรับการขนส่งในเรือที่ไม่เป็นไปตามบทบัญญัติพิเศษของ 7.3.2 ถูกกำหนดโดยขั้นตอนการทดสอบที่ได้รับอนุมัติจากหน่วยงานที่มีอำนาจ เช่น ที่ระบุไว้ในวรรค 1 ของภาคผนวก 2

การปรับระดับสินค้า หมายถึง การปรับระดับของสินค้าภายในพื้นที่เก็บสินค้าไม่ว่าจะเป็นบางส่วนหรือทั้งหมด

การระบายอากาศ หมายถึง การแลกเปลี่ยนอากาศจากภายนอกสู่ภายในพื้นที่เก็บสินค้า

.1 การระบายอากาศอย่างต่อเนื่อง หมายถึง การระบายอากาศที่ทำตลอดเวลา

.2 การระบายอากาศด้วยเครื่องกล หมายถึง การระบายอากาศโดยใช้พลังงาน

.3 การระบายอากาศตามธรรมชาติ หมายถึง การระบายอากาศที่ไม่ใช้พลังงาน

.4 การระบายอากาศบนพื้นผิว หมายถึง การระบายอากาศของพื้นที่ที่อยู่เหนือสินค้า

ส่วนที่ 2

การขนถ่ายสินค้าขึ้นเรือ การขนส่ง และข้อควรระวังเกี่ยวกับการขนถ่ายสินค้าออกจากเรือ

2.1 การกระจายตัวของสินค้า

2.1.1 บททั่วไป

มีอุบัติเหตุเกิดขึ้นจำนวนหนึ่งอันเป็นผลมาจากการขนถ่ายสินค้าเทกองที่เป็นของแข็งในระวางขึ้นเรือและออกจากเรือที่ไม่เหมาะสม สินค้าเทกองที่เป็นของแข็งในระวางจะต้องขนถ่ายให้มีการกระจายตัวอย่างถูกต้องทั่วทั้งเรือเพื่อให้เรือมีความทรงตัวที่เพียงพอและเพื่อให้แน่ใจว่าโครงสร้างของเรือจะไม่ได้รับแรงจนเกินขนาด นอกจากนี้ผู้ส่งต้องให้ข้อมูลที่เพียงพอกับนายเรือเกี่ยวกับสินค้าตามที่ระบุไว้ในส่วนที่ 4 เพื่อให้แน่ใจว่าเรือขนถ่ายสินค้าขึ้นเรืออย่างถูกต้อง (อ้างอิงถึง The Code of Practice for the Safe Loading and Unloading of Bulk Carriers (BLU Code), adopted by the Organization by resolution A.862(20), as amended)

2.1.2 การป้องกันไม่ให้โครงสร้างของเรือรับแรงจนเกินขนาด

เรือสินค้าทั่วไปโดยปกติจะถูกต่อสร้างขึ้นเพื่อขนส่งสินค้าในช่วง 1.39 ถึง 1.67 ลูกบาศก์เมตรต่อตัน เมื่อขนส่งเต็มความสามารถของน้ำหนักบรรทุกของเรือ เมื่อทำการขนถ่ายสินค้าเทกองที่เป็นของแข็งในระวางที่มีความหนาแน่นสูงต้องให้ความสนใจเป็นพิเศษต่อการกระจายตัวของน้ำหนักสินค้าเพื่อหลีกเลี่ยงการรับแรงที่มากเกินไปโดยคำนึงถึงสภาพของการขนถ่ายสินค้าขึ้นเรือซึ่งอาจแตกต่างจากที่พบตามปกติ และการกระจายตัวของสินค้าที่ไม่เหมาะสมอาจทำให้เกิดแรงต่อโครงสร้างของตัวเรือที่มีการขนถ่ายสินค้าหรือหรือตัวเรือทั้งหมด การกำหนดกฎเกณฑ์ที่แน่นอนสำหรับการกระจายตัวของสินค้าของเรือทุกลำไม่สามารถทำได้ เนื่องจากแบบโครงสร้างของเรือแต่ละลำอาจแตกต่างกันมาก ข้อมูลเกี่ยวกับการกระจายตัวอย่างเหมาะสมของสินค้าอาจมีกำหนดไว้ในหนังสือแสดงข้อมูลความทรงตัวของเรือ หรืออาจได้มาจากการใช้โปรแกรมคำนวณ

2.1.3 ความทรงตัว

2.1.3.1 อนุสัญญา SOLAS บทที่ II-1 ข้อบังคับที่ 5-1 กำหนดให้เรือทุกลำที่อยู่ภายใต้อนุสัญญามีหนังสือแสดงข้อมูลความทรงตัวของเรือ นายเรือต้องสามารถคำนวณความทรงตัวของเรือในสภาวะที่เลวร้ายที่สุดที่คาดไว้ระหว่างการเดินทางรวมกับที่ออกเดินทาง และแสดงให้เห็นว่าเรือมีความทรงตัวเพียงพอ

2.1.3.2 เมื่อใดก็ตามที่มีการขนส่งสินค้าเทกองที่เป็นของแข็งในระวางซึ่งน่าสงสัยว่าจะมีการเคลื่อนตัวโดยง่ายในพื้นที่เก็บสินค้า tween-deck หรือมีขนส่งสินค้าเพียงบางส่วนในระวาง จะต้องมีการติดตั้งสิ่งที่แบ่งแยกการเคลื่อนตัวของสินค้าที่มีความแข็งแรงเพียงพอ

2.1.3.3 สินค้าที่มีความหนาแน่นสูงจะต้องถูกขนถ่ายขึ้นเรือลงในพื้นที่เก็บสินค้าด้านล่างแทนที่จะลงในพื้นที่เก็บสินค้า tween-deck เท่าที่จะสามารถปฏิบัติได้

2.1.3.4 เมื่อมีความจำเป็นต้องบรรทุกสินค้าที่มีความหนาแน่นสูงในพื้นที่เก็บสินค้า tween-decks หรือพื้นที่เก็บสินค้าชั้นบน จะต้องมีการพิจารณาอย่างรอบคอบเพื่อให้แน่ใจว่าพื้นที่ดาดฟ้าเรือไม่ได้รับน้ำหนักมากจนเกินไป และความทรงตัวของเรือจะไม่ลดลงต่ำกว่าระดับต่ำสุดที่ยอมรับได้ซึ่งระบุไว้ในข้อมูลความทรงตัวของเรือ

2.2 การขนถ่ายสินค้าขึ้นเรือและออกจากเรือ

2.2.1 พื้นที่เก็บสินค้าจะต้องได้รับการตรวจสอบและเตรียมการสำหรับสินค้าที่จะขนถ่ายขึ้นเรือ (อ้างอิงถึง The Guidance to ships' crews and terminal personnel for bulk carrier inspections (resolution A.866(20)).

2.2.2 จะต้องเตรียมการหลุมน้ำที่คงค้างในระวางและแผ่นกรองเป็นการพิเศษ เพื่ออำนวยความสะดวกในการระบายน้ำและป้องกันไม่ให้สินค้าเข้าสู่ระบบท่อทาง

2.2.3. ระบบท่อทาง ท่อวัดปริมาณน้ำที่คงค้างในระวาง และท่อทางอื่นๆ ภายในพื้นที่เก็บสินค้าจะต้องอยู่ในสภาพที่ดี

2.2.4. เนื่องจากความเร็วในการขนถ่ายสินค้าขึ้นเรือของสินค้าเทกองที่เป็นของแข็งในระวางที่มีความหนาแน่นสูงบางชนิดอาจจำเป็นต้องมีการดูแลเป็นพิเศษ เพื่อปกป้องอุปกรณ์ในพื้นที่เก็บสินค้าจากความเสียหาย การวัดน้ำที่คงค้างในระวาง หลังจากเสร็จสิ้นการขนถ่ายสินค้าขึ้นเรืออาจมีประสิทธิภาพในการตรวจสอบความเสียหายของอุปกรณ์ในพื้นที่เก็บสินค้า

2.2.5 ระบบระบายอากาศจะต้องถูกปิดหรือกรอง และระบบปรับอากาศอยู่ในโหมดหมุนเวียนระหว่างการขนถ่ายสินค้าขึ้นเรือหรือออกจากเรือ เพื่อลดฝุ่นละอองเข้าสู่พื้นที่อยู่อาศัยหรือพื้นที่ภายในอื่นๆ เท่าที่ปฏิบัติได้

2.2.6 จะต้องมีการพิจารณาอย่างรอบคอบ เพื่อลดขอบเขตที่ฝุ่นละอองอาจจะไปสัมผัสกับชิ้นส่วนที่เคลื่อนไหวของเครื่องจักรบนดาดฟ้าเรือและเครื่องช่วยการเดินเรือภายนอก

ส่วนที่ 3

ความปลอดภัยของบุคคลและเรือ

3.1 ข้อกำหนดทั่วไป

3.1.1 ก่อนและระหว่างการขนถ่ายสินค้าเทกองที่เป็นของแข็งในระวางขึ้นเรือ การขนส่ง และการขนถ่ายสินค้าดังกล่าวออกจากเรือ จะต้องปฏิบัติตามข้อควรระวังเพื่อความปลอดภัยที่จำเป็นทั้งหมด

3.1.2 การประเมินความเสี่ยงด้านความปลอดภัยจากอัคคีภัยในการปฏิบัติงานประจำบนเรือในพื้นที่ขนถ่ายสินค้าจะต้องดำเนินการโดยลูกเรือของเรือสินค้าเทกองที่ขนถ่ายสินค้าด้วยตนเองผ่านระบบสายพานลำเลียงที่ติดตั้งภายในโครงสร้างของเรือ โดยจะต้องคำนึงถึงการป้องกันอัคคีภัยและการทำงานของระบบตรวจจับอัคคีภัยอย่างมีประสิทธิภาพ การควบคุมและการระงับอัคคีภัยภายใต้สภาพการทำงานและสินค้าที่คาดการณ์ไว้ทั้งหมด การประเมินความเสี่ยงด้านความปลอดภัยจากอัคคีภัยจะต้องมีรายละเอียดกำหนดไว้ในระบบการจัดการความปลอดภัยของเรือ (SMS) พร้อมกับเวลาที่แนะนำในการประเมินอย่างสม่ำเสมอ

3.1.3 เรือจะต้องจัดให้มีสำเนาของคำแนะนำเกี่ยวกับการตอบสนองต่อเหตุการณ์ฉุกเฉินและการปฐมพยาบาลที่เกี่ยวข้องกับเหตุการณ์ที่เกี่ยวข้องกับสินค้าอันตรายในรูปแบบของแข็งในระวาง (อ้างอิงถึงThe Medical First Aid Guide for Use in Accidents Involving Dangerous Goods (MFAG) (MSC/Circ.857)

3.2 อันตรายจากพิษ การกัดกร่อน และการหายใจไม่ออก

3.2.1 สินค้าเทกองที่เป็นของแข็งในระวางบางชนิดมีความอ่อนไหวต่อการเกิดปฏิกิริยาออกซิเดชั่นซึ่งอาจส่งผลให้สูญเสียออกซิเจน การปล่อยก๊าซพิษหรือควัน และเกิดความร้อนด้วยตัวเอง สินค้าบางชนิดไม่มีแนวโน้มที่จะเกิดปฏิกิริยาออกซิเดชั่น แต่อาจปล่อยควันพิษออกมาโดยเฉพาะเมื่อเวลาเปียก นอกจากนี้ยังมีสินค้าซึ่งเมื่อเวลาเปียกมีการกัดกร่อนผิวหนัง ตา และเยื่อบุเมือกหรือโครงสร้างของเรือ เมื่อขนส่งสินค้าเหล่านี้จะต้องให้ความสนใจเป็นพิเศษเกี่ยวกับการป้องกันของบุคคลและความจำเป็นในการใช้ความระมัดระวังเป็นพิเศษที่จะต้องดำเนินการก่อนที่จะขนถ่ายสินค้าขึ้นเรือและหลังการขนถ่ายสินค้าออกจากเรือ

3.2.2 ต้องให้ความสนใจอย่างเหมาะสมว่าพื้นที่เก็บสินค้าและพื้นที่ว่างข้างเคียงอาจมีออกซิเจนน้อยลงหรืออาจมีก๊าซพิษหรือก๊าซสลบ และพื้นที่เก็บสินค้าหรือถังว่างเปล่าที่ยังคงปิดบางครั้งอาจมีออกซิเจนไม่เพียงพอต่อการดำรงชีวิต

3.2.3 สินค้าเทกองที่เป็นของแข็งในระวางจำนวนมากมีแนวโน้มที่จะทำให้เกิดการสูญเสียออกซิเจนในพื้นที่เก็บสินค้าหรือถัง สินค้าเหล่านี้รวมถึงผลิตภัณฑ์ผัก และผลิตภัณฑ์จากป่า โลหะที่มีธาตุเหล็ก โลหะซัลไฟด์เข้มข้น และสินค้าที่เป็นถ่านหิน

3.2.4 ก่อนที่จะเข้าสู่พื้นที่ปิดบนเรือ จะต้องปฏิบัติตามขั้นตอนที่เหมาะสมตามคำแนะนำที่จัดทำโดยองค์การทางทะเลระหว่างประเทศ (อ้างอิงถึง Revised recommendations for entering enclosed spaces

aboard ships (resolution A.1050 (27)) จะต้องมีการตั้งข้อสังเกตว่าหลังจากที่มีการทดสอบพื้นที่เก็บสินค้าหรือถังและโดยทั่วไปแล้วปลอดภัยสำหรับการเข้าไป อาจมีพื้นที่เล็กๆ ภายในที่มีออกซิเจนไม่เพียงพอหรือยังมีควันพิษอยู่

3.2.5 เมื่อบรรทุกสินค้าเทกองที่เป็นของแข็งในระวางที่มีแนวโน้มว่าจะปล่อยก๊าซพิษหรือก๊าซไวไฟ และ/หรือทำให้เกิดการสูญเสียออกซิเจนในพื้นที่เก็บสินค้า ต้องจัดให้มีเครื่องมือที่เหมาะสมสำหรับการวัดความเข้มข้นของก๊าซและออกซิเจนในพื้นที่เก็บสินค้า

3.2.6 การเข้าไปในพื้นที่เก็บสินค้าในกรณีฉุกเฉินต้องดำเนินการโดยบุคลากรที่ได้รับการฝึกอบรมที่สวมใส่เครื่องช่วยหายใจและชุดป้องกันเท่านั้น และอยู่ภายใต้การกำกับดูแลของเจ้าหน้าที่ที่รับผิดชอบ

3.3 อันตรายต่อสุขภาพเนื่องจากฝุ่นละออง

เพื่อลดความเสี่ยงเรื้อรังและเฉียบพลันที่เกี่ยวข้องกับการสัมผัสกับฝุ่นละอองของสินค้าเทกองที่เป็นของแข็งในระวาง ไม่สามารถให้ความสำคัญมากเกินไปต่อความต้องการสำหรับมาตรฐานระดับสูงของสุขอนามัยส่วนบุคคลของผู้ที่สัมผัสกับฝุ่นละออง จะต้องมีข้อควรระวังรวมถึงการใช้เครื่องช่วยหายใจที่เหมาะสม ชุดป้องกัน ครีมป้องกันผิวหนัง การซักของใช้ส่วนตัวและซักเสื้อผ้าภายนอกอย่างเพียงพอตามความจำเป็น

3.4 บรรยากาศซึ่งไวไฟ

3.4.1 ฝุ่นละอองของสินค้าเทกองที่เป็นของแข็งในระวางบางประเภทอาจก่อให้เกิดอันตรายจากการระเบิด โดยเฉพาะในขณะขนถ่ายสินค้าขึ้นเรือ ขนถ่ายสินค้าออกจากเรือ และทำความสะอาด ความเสี่ยงนี้สามารถลดได้โดยการระบายอากาศเพื่อป้องกันการก่อตัวของบรรยากาศที่เต็มไปด้วยฝุ่นละออง

3.4.2. สินค้าบางประเภทอาจปล่อยก๊าซไวไฟในปริมาณที่เพียงพอที่ก่อให้เกิดอันตรายจากไฟไหม้หรือการระเบิดได้ ในกรณีที่มีการระบุไว้ในตารางสินค้าในประมวลข้อบังคับนี้หรือโดยข้อมูลของสินค้าที่ได้รับจากผู้ส่ง จะต้องระบายอากาศในพื้นที่เก็บสินค้าอย่างมีประสิทธิภาพตามความจำเป็น บรรยากาศในพื้นที่เก็บสินค้าจะต้องถูกตรวจสอบด้วยเครื่องตรวจจับก๊าซที่เหมาะสม จะต้องคำนึงถึงการระบายอากาศและการตรวจสอบบรรยากาศในพื้นที่ปิดที่อยู่ติดกับพื้นที่เก็บสินค้าด้วย

3.5 การระบายอากาศ

3.5.1 เว้นแต่จะกำหนดเป็นอย่างอื่น เมื่อมีการขนส่งสินค้าที่อาจปล่อยก๊าซพิษออกมา พื้นที่เก็บสินค้าจะต้องได้รับการระบายอากาศด้วยเครื่องกลหรือตามธรรมชาติ และเมื่อมีการขนส่งสินค้าที่อาจปล่อยก๊าซไวไฟออกมา พื้นที่เก็บสินค้าจะต้องได้รับการระบายอากาศด้วยเครื่องกล

3.5.2 หากการระบายอากาศอาจเป็นอันตรายต่อเรือหรือสินค้า อาจหยุดการระบายอากาศดังกล่าว เว้นแต่จะทำให้เกิดความเสี่ยงต่อการระเบิด

3.5.3 เมื่อตารางของสินค้าในประมวลข้อบังคับนี้หรือข้อมูลของสินค้าจากผู้ส่งกำหนดให้มีการระบายอากาศอย่างต่อเนื่อง จะต้องมีการระบายอากาศอย่างต่อเนื่องในขณะที่สินค้าอยู่บนเรือ เว้นแต่ว่าสถานการณ์เปลี่ยนแปลงไปโดยการระบายอากาศจะเป็นอันตรายต่อเรือ

3.5.4 จะต้องจัดให้มีช่องระบายอากาศในพื้นที่เก็บสินค้าเพื่อจุดประสงค์สำหรับการขนส่งสินค้าที่ต้องให้มีการระบายอากาศอย่างต่อเนื่อง ช่องเปิดดังกล่าวจะต้องเป็นไปตามข้อกำหนดของอนุสัญญาระหว่างประเทศว่าด้วยแนวน้ำบรรทุกและที่แก้ไขเพิ่มเติม สำหรับช่องเปิดที่ไม่มีการติดตั้งช่องปิด

3.5.5 การระบายอากาศจะต้องหลีกเลี่ยงก๊าซอันตราย ไอระเหย หรือฝุ่นละอองให้ไม่สามารถเข้าไปในห้องพักหรือพื้นที่ภายในอื่นๆ ในระดับความเข้มข้นที่เป็นอันตราย จะต้องมีการพิจารณาอย่างเหมาะสมเพื่อป้องกันไม่ให้ก๊าซ ไอระเหย หรือฝุ่นละอองที่เป็นอันตรายเข้าสู่พื้นที่ทำงานปิด จะต้องมีการระวังเพื่อปกป้องบุคคลที่อยู่ในพื้นที่ทำงานเหล่านี้

3.5.6 เมื่อสินค้าอาจเกิดความร้อนขึ้นเอง จะต้องไม่มีการระบายอากาศนอกเหนือจากการระบายอากาศบนพื้นผิว และต้องไม่ให้มีอากาศสัมผัสกับสินค้าโดยตรง

3.6 สินค้าภายใต้การรมควันระหว่างการขนส่ง

3.6.1 การรมควันจะต้องดำเนินการตามคำแนะนำที่จัดทำโดยองค์การทางทะเลระหว่างประเทศ (อ้างอิงถึง The Recommendations on the safe use of pesticides in ships applicable to the fumigation of cargo holds (MSC.1/Circ.1264), as amended by MSC.1/Circ.1396)

3.6.2 เมื่อมีการใช้สารรมควัน เช่น ก๊าซฟอสฟีน สำหรับการรมควันระหว่างการขนส่ง จะต้องคำนึงถึงความเป็นพิษร้ายแรงของสารรมควัน โดยคำนึงว่าสารรมควันอาจเข้าสู่พื้นที่ที่ถูกใช้งานแม้ว่าจะมีมาตรการข้อควรระวังหลายอย่างก็ตาม โดยเฉพาะอย่างยิ่งในกรณีที่สารรมควันรั่วไหลจากพื้นที่เก็บสินค้าภายใต้การรมควัน มีความเป็นไปได้ว่าสารรมควันอาจเข้าห้องเครื่องผ่านปล่องระบายอากาศ ท่อ และระบบท่อใดๆ รวมถึง wiring ducts บนหรือใต้ดาดฟ้า หรือระบบลดความชื้นที่อาจเชื่อมต่อกับส่วนต่าง ๆ ของพื้นที่เก็บสินค้าหรือส่วนของห้องเครื่อง จะต้องให้ความสนใจกับพื้นที่อาจมีปัญหาเกิดขึ้น เช่นระบบท่อทางของน้ำท้องเรือและท่อทางของสินค้าและวาล์ว (อ้างอิงถึง paragraph 3.3.2.4 of MSC.1/Circ.1264, as amended by MSC.1/Circ.1396) ควรพิจารณาขั้นตอนการระบายอากาศบนเรือในระหว่างการเดินทางอย่างถี่ถ้วนในทุกกรณีเกี่ยวกับความเป็นไปได้ของการดูดสารรมควัน อาทิเช่น ขั้นตอนและการตั้งค่าการระบายอากาศที่ไม่ถูกต้อง การสร้างสุญญากาศเนื่องจากการปิดอุปกรณ์ที่ไม่ถูกต้อง เครื่องปรับอากาศและระบบระบายอากาศแบบวงปิดของห้องพัก ก่อนที่จะเริ่มขั้นตอนการรมควัน ควรตรวจสอบว่าบานพับระบายอากาศและอุปกรณ์สำหรับปิดมีการติดตั้งอย่างถูกต้อง และวิธีการปิดและปิดผนึกของช่องเปิดของฝากั้นทั้งหมด (เช่นประตูและทางเข้า) จากห้องเครื่องถึงปล่องระบายอากาศ / duct keels และช่องว่างอื่นๆ ที่ในกรณีของการรั่วไหลอาจไม่ปลอดภัยที่จะเข้าไปในระหว่างการรมควันนั้นมีประสิทธิภาพ ได้รับการยืนยันว่าปิด และมีป้ายสัญญาณเตือน (อ้างอิงถึง paragraph 3.3.2.10 of MSC.1/Circ.1264, as amended by MSC.1/Circ.1396.)

3.6.3 การตรวจสอบความปลอดภัยของความเข้มข้นของก๊าซจะต้องดำเนินอย่างต่อเนื่องตลอดการเดินทางอย่างน้อยทุกแปดชั่วโมงในสถานที่ที่เหมาะสมทั้งหมด หรือบ่อยกว่านั้นถ้าผู้ที่ดูแลรับผิดชอบในการรมควันแนะนำ ซึ่งอย่างน้อยจะต้องรวมถึง ห้องพัก ห้องเครื่อง พื้นที่ที่กำหนดไว้สำหรับใช้ในการนำเรือ และพื้นที่ทำงานและห้องเก็บของที่ไปบ่อยครั้ง เช่น forecastle head spaces ที่อยู่ติดกับพื้นที่เก็บสินค้าซึ่งถูกรมควันระหว่างการขนส่ง จะต้องให้ความสนใจเป็นพิเศษกับพื้นที่ที่มีปัญหา เช่นระบบท่อทางของน้ำท้องเรือและสินค้า การอ่านค่าเหล่านี้จะต้องถูกบันทึกไว้ในสมุดปูมเรือ

ส่วนที่ 4
การประเมินการยอมรับสินค้าที่จะขนส่งอย่างปลอดภัย

4.1 การจำแนกและการแบ่งชั้น

4.1.1 รายชื่อของสินค้าเทกอง

4.1.1.1 สินค้าเทกองที่เป็นของแข็งในระวางทุกตัวในประมวลข้อบังคับนี้ได้รับการกำหนดรายชื่อของสินค้าเทกอง (Bulk Cargo Shipping Name; BCSN) เมื่อมีการขนส่งสินค้าเทกองที่เป็นของแข็งในระวางทางทะเลจะต้องมีการระบุ BCSN ไว้ในเอกสารการขนส่ง

4.1.1.2 ในกรณีที่สินค้าเป็นสินค้าอันตรายและไม่ได้ระบุชื่อที่ถูกต้องในการขนส่งโดยทั่วไป (generic Proper Shipping Name) หรือไม่ได้ระบุไว้เป็นอย่างอื่น (not otherwise specified; N.O.S) ในประมวลข้อบังคับระหว่างประเทศว่าด้วยความปลอดภัยในการขนส่งสินค้าอันตรายทางน้ำ (IMDG Code) BCSN จะประกอบด้วยชื่อที่ถูกต้องในการขนส่งและตามด้วยหมายเลข UN

4.1.1.3 ยกเว้นเฉพาะ RADIOACTIVE MATERIAL, LOW SPECIFIC ACTIVITY (LSA-I), non-fissile or fissile-excepted UN 2912 , RADIOACTIVE MATERIAL, SURFACE CONTAMINATED OBJECTS (SCO-I), non-fissile or fissile-excepted UN 2913 และ ENVIRONMENTALLY HAZARDOUS SUBSTANCE, SOLID, N.O.S. UN 3077 ในกรณีที่สินค้าเป็นสินค้าอันตรายที่ระบุชื่อที่ถูกต้องในการขนส่งโดยทั่วไป (generic Proper Shipping Name)และ/หรือไม่ได้ระบุไว้เป็นอย่างอื่น (not otherwise specified; N.O.S) ในประมวลข้อบังคับระหว่างประเทศว่าด้วยความปลอดภัยในการขนส่งสินค้าอันตรายทางน้ำ (IMDG Code) BCSN จะประกอบ

.1 ชื่อทางเคมีหรือทางเทคนิคของสิ่งของ

.2 คำอธิบายเฉพาะเพื่อระบุคุณสมบัติของสิ่งของ และ

.3 หมายเลข UN

4.1.2 หากมีการขนส่งของเสียเพื่อนำไปกำจัดหรือนำไปกำจัดต่อ ชื่อของสินค้าจะต้องนำหน้าด้วยคำว่า “WASTE”

4.1.3 การระบุสินค้าเทกองที่เป็นของแข็งในระวางอย่างถูกต้องช่วยอำนวยความสะดวกในการระบุเงื่อนไขที่จำเป็นในการขนส่งสินค้าและขั้นตอนการเกิดเหตุฉุกเฉินอย่างปลอดภัย

4.1.4 สินค้าเทกองที่เป็นของแข็งในระวางจะถูกแบ่งชั้นตามความเหมาะสมตามคู่มือการทดสอบและเกณฑ์ของสหประชาชาติ ตอนที่ III (UN Manual of Tests and Criteria, part III) คุณสมบัติต่างๆ ของสินค้าเทกองที่เป็นของแข็งในระวางที่ถูกกำหนดตามประมวลข้อบังคับนี้จะถูกกำหนดตามความเหมาะสมกับสินค้านั้นตามขั้นตอนการทดสอบที่ได้รับอนุมัติจากหน่วยงานที่มีอำนาจในประเทศต้นทางเมื่อมีขั้นตอนการทดสอบดังกล่าว ในกรณีที่ไม่มีขั้นตอนการทดสอบดังกล่าว คุณสมบัติของสินค้าเทกองที่เป็นของแข็งในระวางเหล่านั้น

จะต้องกำหนดตามความเหมาะสมกับสินค้านั้นตามขั้นตอนการทดสอบที่กำหนดไว้ในภาคผนวก 2 ของประมวลข้อบังคับนี้

4.2 การให้ข้อมูล

4.2.1 ผู้ส่งจะต้องให้ข้อมูลที่เหมาะสมเกี่ยวกับสินค้าแก่นายเรือหรือตัวแทนอย่างเพียงพอล่วงหน้าก่อนการขนถ่ายสินค้าขึ้นเรือ เพื่อทำให้สามารถหามาตรการป้องกันที่อาจจำเป็นสำหรับการจัดเก็บที่เหมาะสมและการขนส่งที่ปลอดภัยของสินค้า

4.2.2 ข้อมูลสินค้าจะต้องได้รับการยืนยันเป็นลายลักษณ์อักษรโดยเอกสารการขนส่งที่เหมาะสมก่อนที่จะขนถ่ายสินค้าขึ้นเรือ ข้อมูลสินค้าต้องประกอบด้วย

.1 BCSN เมื่อชื่อของสินค้าแสดงอยู่ในประมวลข้อบังคับนี้ (อาจใช้ชื่อรองนอกเหนือจาก BCSN)

.2 กลุ่มของสินค้า (เอ และ บี, เอ, บี หรือ ซี)

.3 ชั้นของสินค้า (ถ้ามี)

.4 หมายเลข UN นำหน้าด้วยตัวอักษร “UN” สำหรับสินค้า (ถ้ามี)

.5 ปริมาณรวมของสินค้า

.6 stowage factor

.7 ความจำเป็นในการปรับระดับสินค้าและขั้นตอนการปรับระดับสินค้าตามความจำเป็น

.8 โอกาสในการเคลื่อนตัวของสินค้า รวมถึงมุมกอง (ถ้ามี)

.9 ข้อมูลเพิ่มเติมในรูปแบบของใบสำคัญรับรองเกี่ยวกับปริมาณความชื้นของสินค้า และขีดจำกัดของความชื้นที่สามารถขนส่งได้ในกรณีที่คอนเซนเตรทหรือสินค้าอื่นๆ ที่อาจกลายเป็นของเหลว

.10 โอกาสในการก่อตัวของฐานเปียก

.11 ก๊าซพิษหรือก๊าซไวไฟที่อาจเกิดขึ้นจากสินค้า (ถ้ามี)

.12 ความสามารถในการติดไฟ ความเป็นพิษ การกัดกร่อน และความโน้มเอียงต่อการสูญเสียออกซิเจนของสินค้า (ถ้ามี)

.13 คุณสมบัติการเกิดความร้อนด้วยตัวเองของสินค้าและความต้องการในการปรับระดับสินค้า(ถ้ามี)

.14 คุณสมบัติในการปล่อยก๊าซไวไฟเมื่อสัมผัสกับน้ำ (ถ้ามี)

.15 คุณสมบัติของสารกัมมันตรังสี (ถ้ามี)

.16 สินค้านั้นจัดว่าเป็นอันตรายต่อสภาพแวดล้อมทางทะเลหรือไม่ตามภาคผนวก 1 ของภาคผนวก 5 ของอนุสัญญาระหว่างประเทศว่าด้วยการป้องกันมลพิษจากเรือ ค.ศ.1973 และพิธีสาร ค.ศ.1978 และที่แก้ไขเพิ่มเติม และ

.17 ข้อมูลอื่นๆ ที่กำหนดโดยกรมเจ้าท่า

4.2.3 ข้อมูลที่ผู้ส่งจัดเตรียมให้จะต้องมาพร้อมกับใบประกาศ ตัวอย่างของแบบฟอร์มแจ้งการขนส่งสินค้าถูกกำหนดไว้ดังนี้ ทั้งนี้ระบบ Electronic Data Processing (EDP) หรือ Electronic Data Interchange (EDI) อาจถูกนำมาใช้เพื่อเป็นตัวช่วยสำหรับเอกสารในรูปแบบกระดาษ

FORM FOR CARGO INFORMATION
for Solid Bulk Cargoes

<table>
<tr><td colspan="2">BCSN</td></tr>
<tr><td>Shipper</td><td>Transport document number</td></tr>
<tr><td>Consignee</td><td>Carrier</td></tr>
<tr><td>Name/means of transport
Port/place of departure</td><td rowspan="2">Instructions or other matters</td></tr>
<tr><td>Port/place of destination</td></tr>
<tr><td>General description of the cargo
(Type of material/particle size)</td><td>Gross mass (kg/tonnes)</td></tr>
<tr><td colspan="2">Specifications of bulk cargo, if applicable:
Stowage factor:
Angle of repose, if applicable:
Trimming procedures:
Chemical properties if potential hazard*:
* e.g. class & UN No. and/or MHB hazard(s)</td></tr>
<tr><td>Group of the cargo
☐ Group A and B*
☐ Group A*
☐ Group B
☐ Group C
* For cargoes which may liquefy (group A and group A and B cargoes)</td><td>Transportable moisture limit

Moisture content at shipment</td></tr>
<tr><td>Classification relating to MARPOL Annex V

☐ harmful to the marine environment
☐ not harmful to the marine environment

Relevant special properties of the cargo (e.g. highly soluble in water)</td><td>Additional certificate(s)*
☐ Certificate of moisture content and transportable moisture limit
☐ Weathering certificate
☐ Exemption certificate
☐ Other (specify)
*If required</td></tr>
<tr><td>DECLARATION
I hereby declare that the consignment is fully and accurately described and that the given test results and other specifications are correct to the best of my knowledge and belief and can be considered as representative for the cargo to be loaded.</td><td>Name/status, company/organization of signatory

Place and date

Signature on behalf of shipper</td></tr>
</table>

4.3 ใบสำคัญรับรองการทดสอบ

4.3.1 เพื่อให้ได้ข้อมูลที่จำเป็นใน 4.2.1 ผู้ส่งจะต้องจัดให้มีการสุ่มตัวอย่างและทดสอบสินค้าอย่างเหมาะสม ผู้ส่งต้องมอบใบสำคัญรับรองการทดสอบที่เหมาะสมให้กับนายเรือหรือตัวแทนหากจำเป็นตามประมวลข้อบังคับนี้

4.3.2 เมื่อมีการขนส่งคอนเซนเตรทหรือสินค้าอื่นที่อาจกลายเป็นของเหลว ผู้ส่งจะต้องมอบใบสำคัญรับรองที่ลงนามของขีดจำกัดของความชื้นที่สามารถขนส่งได้ให้กับนายเรือหรือตัวแทน และใบสำคัญรับรองที่ลงนามหรือใบประกาศปริมาณความชื้นแต่ละรายการที่ออกโดยหน่วยงานที่ได้รับการยอมรับจากกรมเจ้าท่าในกรณีที่ประเทศไทยเป็นเมืองท่าที่มีการขนถ่ายสินค้าขึ้นเรือ ใบสำคัญรับรองขีดจำกัดของความชื้นที่สามารถขนส่งได้ต้องประกอบด้วยหรือมาพร้อมกับผลลัพธ์ของการทดสอบเพื่อกำหนดขีดจำกัดของความชื้นที่สามารถขนส่งได้ ใบประกาศปริมาณความชื้นต้องประกอบด้วยหรือมาพร้อมกับคำแถลงของผู้ส่งจากความรู้และความเชื่อที่ดีที่สุดของผู้ส่งว่าปริมาณความชื้นเป็นปริมาณความชื้นเฉลี่ยของสินค้าในเวลาที่ใบประกาศถูกนำเสนอต่อนายเรือ

4.3.3 เมื่อมีการขนส่งคอนเซนเตรทหรือสินค้าอื่นที่อาจกลายเป็นของเหลว ผู้ส่งต้องเป็นผู้กำหนดขั้นตอนสำหรับการสุ่มตัวอย่าง การทดสอบ และการควบคุมปริมาณความชื้นโดยคำนึงถึงบทบัญญัติของประมวลข้อบังคับนี้ เพื่อให้แน่ใจว่าปริมาณความชื้นน้อยกว่าขีดจำกัดของความชื้นที่สามารถขนส่งได้เมื่อสินค้าอยู่บนเรือ ขั้นตอนดังกล่าวต้องได้รับการอนุมัติและดำเนินการตรวจสอบโดยกรมเจ้าท่าในกรณีที่ประเทศไทยเป็นเมืองท่าที่มีการขนถ่ายสินค้าขึ้นเรือ (อ้างอิงถึง Guidelines for developing and approving procedures for sampling, testing and controlling the moisture content for solid bulk cargoes which may liquefy (MSC.1/Circ.1454/Rev.1)) เอกสารที่ออกโดยหน่วยงานที่มีอำนาจซึ่งระบุว่าขั้นตอนได้รับการอนุมัติจะถูกส่งมอบให้กับนายเรือหรือตัวแทน

4.3.4 ในการจัดทำขั้นตอนตาม 4.3.3 หากสินค้าถูกขนถ่ายจากเรือลำเลียงไปยังเรือ ผู้ส่งต้องมีขั้นตอนในการป้องกันสินค้าในเรือลำเลียงจากฝนและน้ำเข้ารวมอยู่ด้วย

4.3.5 เมื่อมีการขนถ่ายคอนเซนเตรทหรือสินค้าอื่นที่อาจกลายเป็นของเหลวลงในพื้นที่เก็บสินค้าของเรือมากกว่าหนึ่งระวาง ใบสำคัญรับรองหรือใบประกาศปริมาณความชื้นจะต้องรับรองปริมาณความชื้นของสินค้าแต่ละชนิดของอย่างละเอียดที่ขนถ่ายลงในพื้นที่เก็บสินค้า แม้จะมีข้อกำหนดนี้ แต่ถ้าการสุ่มตัวอย่างตามขั้นตอนมาตรฐานที่ได้รับการยอมรับในระดับสากลหรือระดับชาติระบุว่าสินค้าที่จะขนส่งมีปริมาณความชื้นที่สม่ำเสมอกันทั้งหมด ในกรณีนี้ ใบสำคัญรับรองหรือใบประกาศปริมาณความชื้นเฉลี่ยเพียงหนึ่งใบสำหรับพื้นที่เก็บสินค้าทั้งหมดสามารถใช้ได้

4.3.6 ในกรณีที่จำเป็นต้องมีใบสำคัญรับรองสำหรับตารางเฉพาะรายสำหรับสินค้าที่มีอันตรายจากสารเคมี ใบสำคัญรับรองต้องประกอบด้วยหรือมาพร้อมกับคำแถลงของผู้ส่งจากความรู้และความเชื่อที่ดีที่สุดของผู้ส่งว่าลักษณะทางเคมีของสินค้าเป็นสิ่งที่ปรากฏในเวลาที่มีการขนถ่ายสินค้าขึ้นเรือ อย่างไรก็ตาม ต้องแน่ใจว่าตัวอย่างที่นำมาเป็นตัวแทนของกองสินค้าทั้งหมด

4.4 ขั้นตอนการสุ่มตัวอย่าง

4.4.1 การทดสอบคุณสมบัติทางกายภาพของสินค้าที่จะขนส่งนั้นไม่มีความหมาย เว้นแต่จะดำเนินการก่อนที่จะขนถ่ายสินค้าขึ้นเรือจากตัวอย่างที่เป็นตัวแทนสินค้าที่แท้จริง

4.4.2 การสุ่มตัวอย่างจะต้องดำเนินการโดยบุคคลที่ผ่านการฝึกอบรมอย่างเหมาะสมในขั้นตอนการสุ่มตัวอย่างเท่านั้น และผู้ซึ่งอยู่ภายใต้การดูแลของบุคคลที่ตระหนักถึงคุณสมบัติของสินค้าที่จะขนส่ง และรวมถึงหลักการและวิธีปฏิบัติในการเก็บตัวอย่าง

4.4.3 สำหรับคอนเซนเตรทหรือสินค้าอื่นที่อาจกลายเป็นของเหลว ผู้ส่งจะต้องอำนวยความสะดวกในการเข้าถึงกองสินค้าเพื่อวัตถุประสงค์ในการตรวจสอบ การสุ่มตัวอย่าง และการทดสอบในภายหลังโดยตัวแทนที่ได้รับการเสนอชื่อจากเรือ

4.4.4 ก่อนที่จะสุ่มเก็บตัวอย่างและภายในขอบเขตของความเหมาะสม จะต้องดำเนินการตรวจสอบสินค้าที่จะขนส่งซึ่งประกอบเป็นสินค้าของเรือด้วยตาเปล่า ส่วนสำคัญของสิ่งของที่มีการปนเปื้อน หรือแตกต่างกันอย่างมีนัยสำคัญในลักษณะหรือปริมาณความชื้นจากกลุ่มของสินค้าที่จะขนส่ง จะต้องถูกสุ่มตัวอย่างและวิเคราะห์แยกต่างหาก ในบางครั้งอาจจำเป็นต้องปฏิเสธสิ่งของบางส่วนที่ไม่เหมาะสมสำหรับการขนส่งขึ้นอยู่กับผลลัพธ์ที่ได้จากการทดสอบเหล่านี้

4.4.5 ตัวอย่างที่เป็นตัวแทนของสินค้าต้องหาได้มาจากการใช้เทคนิคที่คำนึงถึงปัจจัยต่อไปนี้

.1 ประเภทของสิ่งของ

.2 การกระจายตัวของขนาดอนุภาค

.3 องค์ประกอบของสิ่งของและความผันแปร

.4 ลักษณะที่ซึ่งวัสดุถูกเก็บในกองสินค้า รถไฟหรือภาชนะอื่นๆ และถ่ายโอนหรือขนถ่ายโดยระบบการขนถ่ายสิ่งของ เช่น conveyors, loading chutes, crane grabs ฯลฯ

.5 อันตรายจากสารเคมี (ความเป็นพิษ การกัดกร่อน ฯลฯ)

.6 ลักษณะที่ต้องพิจารณากำหนด ปริมาณความชื้น ขีดจำกัดของความชื้นที่สามารถขนส่งได้ ความหนาแน่นรวม stowage factor มุมกอง ฯลฯ

.7 ความผันแปรของการกระจายความชื้นของสินค้าที่จะขนส่ง ซึ่งอาจเกิดขึ้นเนื่องจากสภาพอากาศ การระบายน้ำตามธรรมชาติ เช่น เพื่อลดระดับกองสินค้าหรือภาชนะบรรจุหรือการเคลื่อนย้ายของความชื้นในรูปแบบอื่นๆ และ

.8 การเปลี่ยนแปลงที่อาจเกิดขึ้นหลังจากการแข็งตัวของสิ่งของ

4.4.6 ต้องใช้ความระมัดระวังอย่างที่สุดเพื่อป้องกันการเปลี่ยนแปลงในคุณภาพและลักษณะตลอดกระบวนการสุ่มตัวอย่าง ตัวอย่างสำหรับการทดสอบความชื้นจะต้องใส่ในภาชนะที่ผนึกแน่นไม่ให้อากาศเข้าและที่ไม่ดูดซับทันที ภาชนะจะต้องที่มีพื้นที่ว่างให้น้อยที่สุดเพื่อลดการเปลี่ยนแปลงความชื้นใดๆ และต้องติดเครื่องหมายอย่างเหมาะสม

4.4.7 เว้นแต่จะกำหนดเป็นอย่างอื่น การสุ่มตัวอย่างสำหรับการทดสอบที่กำหนดในประมวลข้อบังคับนี้จะต้องเป็นไปตามขั้นตอนมาตรฐานที่ได้รับการยอมรับในระดับสากลหรือระดับประเทศ

4.4.8 สำหรับแร่แร่ที่ยังไม่ผ่านกระบวนการ การสุ่มตัวอย่างกองสินค้าแบบคงที่จะดำเนินการได้เฉพาะเมื่อสามารถเข้าถึงความลึกในสุดของกองสินค้า และสามารถคัดแยกตัวอย่างจากความลึกในสุดของกองสินค้าได้เท่านั้น

4.5 ช่วงเวลาระหว่างการสุ่มตัวอย่าง/การทดสอบและการขนถ่ายสินค้าขึ้นเรือสำหรับการกำหนดขีดจำกัดของความชื้นที่สามารถขนส่งได้ และปริมาณความชื้น

4.5.1 ผู้ส่งจะต้องรับผิดชอบในการตรวจสอบให้แน่ใจว่าการทดสอบเพื่อกำหนดขีดจำกัดของความชื้นที่สามารถขนส่งได้ของสินค้าเทกองที่เป็นของแข็งในระวางต้องดำเนินการภายในหกเดือนก่อนถึงวันที่ขนถ่ายสินค้าขึ้นเรือ แม้จะมีบทบัญญัตินี้ เมื่อองค์ประกอบหรือลักษณะของสินค้าเปลี่ยนแปลงไปไม่ว่าด้วยเหตุผลใดก็ตาม ผู้ส่งจะต้องรับผิดชอบในการตรวจสอบให้แน่ใจว่ามีการทดสอบเพื่อกำหนดขีดจำกัดของความชื้นที่สามารถขนส่งได้อีกครั้ง หลังจากมีการสันนิษฐานอย่างสมเหตุสมผลว่ามีการเปลี่ยนแปลงดังกล่าวเกิดขึ้น

4.5.2 ผู้ส่งจะต้องรับผิดชอบในการตรวจสอบให้แน่ใจว่าการสุ่มตัวอย่างและการทดสอบความชื้นจะดำเนินการใกล้เคียงกับวันที่จะเริ่มต้นของการขนถ่ายสินค้าขึ้นเรือ ช่วงเวลาระหว่างการสุ่มตัวอย่าง/การทดสอบ และวันที่เริ่มต้นของการขนถ่ายสินค้าขึ้นเรือจะต้องไม่เกิน 7 วัน หากสินค้าสัมผัสกับฝนหรือหิมะอย่างมีนัยสำคัญระหว่างเวลาของการทดสอบและวันที่ของการขนถ่ายสินค้าขึ้นเรือเสร็จสมบูรณ์ ผู้ส่งจะต้องรับผิดชอบในการรับรองว่าปริมาณความชื้นของสินค้ายังน้อยกว่าขีดจำกัดของความชื้นที่สามารถขนส่งได้และมีการให้หลักฐานนี้แก่นายเรือโดยเร็วที่สุด

4.5.3 ตัวอย่างของสินค้าที่แช่แข็งจะต้องทำการทดสอบขีดจำกัดของความชื้นที่สามารถขนส่งได้หรือปริมาณความชื้นหลังจากที่ความชื้นอิสระได้ละลายอย่างสมบูรณ์

4.6 ขั้นตอนการสุ่มตัวอย่างสำหรับกองสินค้าคอนเซนเตรท

4.6.1 ไม่สามารถระบุวิธีการสุ่มตัวอย่างเพียงวิธีเดียวสำหรับสินค้าที่จะขนส่งทั้งหมดได้ เนื่องจากลักษณะของสิ่งของและรูปแบบที่มีอยู่จะมีผลต่อการเลือกขั้นตอนที่จะใช้ ในกรณีที่ไม่มีขั้นตอนการสุ่มตัวอย่างมาตรฐานที่ยอมรับในระดับสากลหรือระดับประเทศ อาจใช้ขั้นตอนการสุ่มตัวอย่างต่อไปนี้สำหรับกองสินค้าคอนเซนเตรทเพื่อกำหนดปริมาณความชื้นและขีดจำกัดของความชื้นที่สามารถขนส่งได้ของแร่คอนเซนเตรท ขั้นตอนเหล่านี้ไม่ได้มีวัตถุประสงค์เพื่อทดแทนขั้นตอนการสุ่มตัวอย่าง เช่น การใช้การสุ่มตัวอย่างอัตโนมัติซึ่งได้ความถูกต้องที่เท่าเทียมหรือเหนือกว่าของปริมาณความชื้นหรือขีดจำกัดของความชื้นที่สามารถขนส่งได้

4.6.2 ตัวอย่างย่อยจะถูกเก็บในรูปแบบแบบเดียวกันอย่างสมเหตุสมผล หากเป็นไปได้จากกองสินค้าที่ปรับระดับ

4.6.3 วาดแผนผังของกองสินค้าและแบ่งออกเป็นพื้นที่ แต่ละกองมีปริมาณประมาณ 125 ตัน 250 ตันหรือ 500 ตัน ขึ้นอยู่กับปริมาณของคอนเซนเตรทที่จะขนส่งทางเรือ แผนผังดังกล่าวจะระบุจำนวนของตัวอย่างย่อยที่จำเป็นและจุดที่จะดำเนินการเก็บตัวอย่าง ทุกๆ ตัวอย่างย่อยที่เก็บได้มาจากใต้พื้นผิวของจุดที่กำหนดประมาณ 50 เซนติเมตร

4.6.4 จำนวนตัวอย่างย่อยและขนาดของตัวอย่าง มีรายละเอียดดังต่อไปนี้

สินค้าที่จะขนส่งไม่มากกว่า 15,000 ตัน
เก็บตัวอย่างย่อย 200 กรัม ต่อสินค้า 125 ตันที่จะขนส่ง

สินค้าที่จะขนส่งมากกว่า 15,000 ตัน แต่ไม่มากกว่า 60,000 ตัน
เก็บตัวอย่างย่อย 200 กรัม ต่อสินค้า 250 ตันที่จะขนส่ง

สินค้าที่จะขนส่งมากกว่า 60,000 ตัน
เก็บตัวอย่างย่อย 200 กรัม ต่อสินค้า 500 ตันที่จะขนส่ง

4.6.5 ตัวอย่างย่อยสำหรับกำหนดปริมาณความชื้นจะถูกเก็บในภาชนะที่ปิดสนิท (เช่น ถุงพลาสติก กระป๋อง หรือถังโลหะขนาดเล็ก) ทันทีที่ดึงออกจากพาหนะไปยังห้องปฏิบัติการทดสอบที่ซึ่งตัวอย่างย่อยถูกผสมอย่างทั่วถึงเพื่อให้ได้ตัวอย่างที่เป็นตัวแทนของทั้งหมด ในกรณีที่ไม่มีสิ่งอำนวยความสะดวกในการทดสอบที่สถานที่ทดสอบ การผสมดังกล่าวจะกระทำภายใต้สภาวะที่ควบคุม ณ กองสินค้า และตัวอย่างที่เป็นตัวแทนจะถูกเก็บในภาชนะที่ปิดสนิท และส่งต่อไปยังห้องปฏิบัติการทดสอบ

4.6.6 ขั้นตอนพื้นฐาน รวมถึง

.1 การระบุสินค้าที่จะขนส่งที่จะถูกสุ่มเก็บตัวอย่าง

.2 การกำหนดจำนวนของแต่ละตัวอย่างย่อย และตัวอย่างที่เป็นตัวแทนตามที่กำหนดไว้ใน 4.6.4

.3 การกำหนดตำแหน่งที่จะได้เก็บตัวอย่างย่อย และวิธีการรวมตัวอย่างย่อยดังกล่าวเพื่อให้ได้ตัวอย่างที่เป็นตัวแทน

.4 การรวบรวมตัวอย่างย่อยเฉพาะรายและเก็บไว้ในภาชนะที่ปิดสนิท

.5 การผสมตัวอย่างย่อยอย่างทั่วถึง เพื่อให้ได้ตัวอย่างที่เป็นตัวแทน และ

.6 การเก็บตัวอย่างที่เป็นตัวแทนในภาชนะที่ปิดสนิท หากต้องส่งต่อไปยังห้องปฏิบัติการทดสอบ

4.7 ตัวอย่างของขั้นตอนการสุ่มตัวอย่างที่เป็นมาตรฐาน

- ISO 3082:2017 – *Iron ores – Sampling and sample preparation procedures*
(Note: Under this Standard the in situ sampling of ships and stockpiles is not permitted)

- IS1405:2010 – *Iron Ores – Sampling & Sample Preparation – Manual Method*
(Note: This Indian Standard covers the in situ sampling of stockpiles up to a height of 3 m)

- ISO 1988: 1975 – *Hard coal – Sampling*

- ASTM D2234/D2234M –17– Standard Practice for Collection of a Gross Sample of Coal

- Australian Standards

AS 4264.1 – *Coal and Coke-Sampling: Part 1: Coal – Sampling Procedures*

AS 1141 – Series – *Methods of sampling and testing aggregates*

BS 1017-1:1989 – *Sampling of coal and coke. Methods for sampling of coal*

BS 1017-2:1994 – *Sampling of coal and coke. Methods for sampling of coke*

- Canadian Standard Sampling Procedure for Concentrate Stockpiles

- European Communities Method of Sampling for the Control of Fertilizers

- JIS M 8100 – Japanese General Rules for Methods of Sampling Bulk Materials

- JIS M 8100:1992 – Particulate cargoes – General Rules for Methods of Sampling

- Polish Standard Sampling Procedure for:

- Iron and Manganese Ores – Ref. No. PN-67/H-04000

- Non-ferrous Metals – Ref. No. PN-70/H-04900

- Russian Federation Standard Sampling Procedure for the Determination of Moisture Content in Ore Concentrates

4.8 เอกสารที่จำเป็นบนเรือที่บรรทุกสินค้าอันตราย

4.8.1 เรือทุกลำที่บรรทุกสินค้าอันตรายในรูปแบบของแข็งในระวางจะต้องมีรายการพิเศษหรือรายการสินค้าอันตรายบนเรือและตำแหน่งของสินค้าตามอนุสัญญาระหว่างประเทศว่าด้วยความ ปลอดภัยแห่งชีวิตในทะเล บทที่ VII ข้อบังคับที่ 7-2.2 แผนจัดการระวางภายในเรือสินค้าอย่างละเอียดที่ระบุชั้นและตำแหน่งของสินค้าอันตรายทั้งหมดบนเรือ อาจถูกนำมาใช้แทนรายการพิเศษหรือรายการสินค้าข้างต้นได้

4.8.2 เมื่อมีการบรรทุกสินค้าอันตรายในรูปแบบของแข็งในระวางบนเรือจะต้องมีคำแนะนำที่เหมาะสมในการตอบสนองต่อเหตุการณ์ฉุกเฉินที่เกี่ยวข้องกับสินค้าดังกล่าว

4.8.3 เรือสินค้าที่มีขนาดตั้งแต่ 500 ตันกรอสส์ขึ้นไปที่ต่อสร้างขึ้นในหรือหลังวันที่ 1 กันยายน 2527 และเรือสินค้าที่มีขนาดน้อยกว่า 500 ตันกรอสส์ขึ้นไปที่ต่อสร้างขึ้นในหรือหลังวันที่ 1 กุมภาพันธ์ 2535 ซึ่งอยู่ภายใต้อนุสัญญาระหว่างประเทศว่าด้วยความปลอดภัยแห่งชีวิตในทะเล บทที่ II-2 ข้อบังคับที่ 19.4 จะต้องมีหนังสือรับรองการปฏิบัติตามเมื่อบรรทุกสินค้าอันตรายในรูปแบบของแข็งในระวาง ยกเว้นชั้น 6.2 และชั้น 7

ส่วนที่ 5

ขั้นตอนการปรับระดับสินค้า

5.1 บทบัญญัติทั่วไปสำหรับการปรับระดับสินค้า

5.1.1 การปรับระดับสินค้าจะช่วยลดโอกาสในการเคลื่อนตัวของสินค้า และลดอากาศที่เข้าไปในสินค้า อากาศที่เข้าไปในสินค้าอาจทำให้สินค้าเกิดความร้อนด้วยตัวเอง เพื่อลดความเสี่ยงเหล่านี้สินค้าต้องถูกปรับระดับอย่างสมเหตุสมผลตามความจำเป็น

5.1.2 พื้นที่เก็บสินค้าจะต้องมีสินค้าเต็มเท่าที่จะทำได้ โดยไม่ส่งผลต่อโครงสร้างท้องเรือหรือพื้นที่เก็บสินค้า tween deck ให้มีการรับน้ำหนักจนมากเกินไป เพื่อป้องกันการเลื่อนของสินค้าเทกองที่เป็นของแข็งในระวาง จะต้องคำนึงถึงปริมาณของสินค้าเทกองที่เป็นของแข็งในระวางในแต่ละพื้นที่เก็บสินค้า โดยคำนึงถึงความเป็นไปได้ของการเคลื่อนที่และโมเมนต์และแรงตามแนวยาวของเรือ สินค้าต้องกระจายอย่างกว้างขวางที่สุดเท่าที่ทำได้ในขอบเขตของพื้นที่เก็บสินค้า ทั้งนี้ อาจต้องนำทางเลือกสำหรับการจำกัดการขนถ่ายสินค้าลงในระวางที่กำหนดในอนุสัญญาระหว่างประเทศว่าด้วยความปลอดภัยแห่งชีวิตในทะเล บทที่ XII มาพิจารณาด้วย

5.1.3 นายเรือมีสิทธิที่จะกำหนดให้ระดับสินค้าถูกปรับแต่ง ในกรณีที่มีข้อกังวลเกี่ยวกับความทรงตัวของเรือตามข้อมูลที่มีอยู่ โดยคำนึงถึงลักษณะและแผนการเดินทางของเรือ

5.2 บทบัญญัติพิเศษสำหรับเรือที่มีดาดฟ้าหลายชั้น

5.2.1 เมื่อมีกาขนถ่ายสินค้าเทกองที่เป็นของแข็งในระวางลงในพื้นที่เก็บสินค้าด้านล่าง สินค้าจะต้องถูกปรับระดับอย่างเพียงพอเพื่อให้มีการกระจายมวลที่เท่ากันบนโครงสร้างท้องเรือ

5.2.2 เมื่อมีการบรรทุกสินค้าในพื้นที่เก็บสินค้า tween deck ของเรือ hatchways ของพื้นที่เก็บสินค้า tween deck ดังกล่าวต้องถูกปิด ในกรณีที่ข้อมูลการขนถ่ายสินค้าขึ้นเรือบ่งบอกว่ามีระดับแรงเค้นที่ไม่สามารถยอมรับได้ต่อโครงสร้างท้องเรือ ถ้าหาก hatchways ถูกเปิดทิ้งไว้ สินค้าต้องถูกปรับระดับอย่างสมเหตุสมผล และต้องแผ่ขยายจากกราบหนึ่งไปยังอีกกราบหนึ่ง หรือยึดโดยเพิ่มเติมการแบ่งส่วนตามแนวยาวที่มีความแข็งแรงที่เพียงพอ ความสามารถในการรับน้ำหนักบรรทุกที่ปลอดภัยของพื้นที่เก็บสินค้า tween deck จะต้องถูกตรวจสอบเพื่อให้แน่ใจว่าโครงสร้างของดาดฟ้าไม่ได้รับน้ำหนักเกิน

5.2.3 ถ้ามีการบรรทุกสินค้าถ่านหินในพื้นที่เก็บสินค้า tween deck ของเรือ hatchways ของพื้นที่เก็บสินค้า tween deck ดังกล่าวต้องถูกปิดอย่างแน่นหนา เพื่อป้องกันอากาศเคลื่อนผ่านสินค้าในพื้นที่เก็บสินค้า tween deck

5.3 บทบัญญัติพิเศษสำหรับสินค้าเทกองที่เกาะตัวกัน

5.3.1 สินค้าชื้นและแห้งบางประเภทมีการเกาะตัวกันเป็นก้อน สำหรับสินค้าที่เกาะตัวกันให้ใช้บทบัญญัติทั่วไปใน 5.1

5.3.2 มุมกองไม่ได้เป็นตัวบ่งชี้ความทรงตัวของสินค้าเทกองที่เกาะตัวกัน และมุมกองไม่ได้รวมอยู่ในตารางเฉพาะรายสำหรับสินค้าเทกองที่เกาะตัวกัน

5.4 บทบัญญัติพิเศษสำหรับสินค้าเทกองที่ไม่เกาะตัวกัน

5.4.1 สินค้าเทกองที่ไม่เกาะตัวกันมีระบุไว้ในวรรค 1 ในภาคผนวก 3 และสินค้าอื่นใดๆ ที่ไม่ได้ระบุไว้ในภาคผนวกที่แสดงคุณสมบัติของสิ่งของที่ไม่เกาะตัวกัน

5.4.2 เพื่อจุดประสงค์ของการปรับระดับสินค้า สินค้าเทกองที่เป็นของแข็งในระวางสามารถแบ่งประเภทออกเป็นที่เกาะตัวกันหรือที่ไม่เกาะตัวกัน มุมกองเป็นลักษณะของสินค้าเทกองที่ไม่เกาะตัวกัน ซึ่งเป็นตัวบ่งบอกถึงความทรงตัวของสินค้าและได้ถูกรวมไว้ในตารางเฉพาะรายสำหรับสินค้าที่ไม่เกาะตัวกัน จะต้องมีการกำหนดมุมกองของสินค้าซึ่งบทบัญญัติในส่วนนี้บังคับใช้ วิธีการในการกำหนดมุมกองอยู่ในส่วนที่ 6

5.4.3 สินค้าเทกองที่ไม่เกาะตัวกันที่มีมุมกองน้อยกว่าหรือเท่ากับ 30 องศา

สินค้าเหล่านี้ที่ไหลอย่างอิสระเหมือนเมล็ดพืชจะต้องบรรทุกตามบทบัญญัติที่ใช้บังคับกับการจัดเก็บสินค้าจำพวกเมล็ดพืช (อ้างอิงถึง Chapter VI of the SOLAS Convention, and the International Code for the Safe Carriage of Grain in Bulk (resolution MSC.23(59)) จะต้องนำความหนาแน่นรวมของสินค้ามาพิจารณาเมื่อกำหนด

.1 โครงสร้างส่วนประกอบของเรือ และการจัดการความปลอดภัยในการยึดตรึงของการแบ่งกั้นพื้นที่ และช่องรับสินค้าบริเวณผนังกั้นระวาง และ

.2 ผลกระทบต่อความทรงตัวเรือของสินค้าที่สามารถเคลื่อนที่ไปมาในระวางได้

5.4.4 สินค้าเทกองที่ไม่เกาะตัวกันที่มีมุมกองมากกว่า 30 องศาจนถึง 35 องศา

สินค้าเหล่านี้ต้องถูกปรับระดับตามเกณฑ์ต่อไปนี้

.1 ความไม่เรียบของพื้นผิวสินค้าที่วัดเป็นระยะทางแนวดิ่ง (Δh) ระหว่างระดับสูงสุดและต่ำสุดของพื้นผิวสินค้าจะต้องไม่เกิน B/10 เมื่อ B คือความกว้างของเรือหน่วยเป็นเมตร โดยค่าสูงสุดของ Δh ที่ยอมรับได้เท่ากับ 1.5 เมตร หรือ

.2 การขนถ่ายสินค้าขึ้นเรือกระทำโดยใช้อุปกรณ์ปรับระดับที่ได้รับอนุมัติจากกรมเจ้าท่า

5.4.5 สินค้าเทกองที่ไม่เกาะตัวกันที่มีมุมกองมากกว่า 35 องศา

สินค้าเหล่านี้ต้องถูกปรับระดับตามเกณฑ์ต่อไปนี้

.1 ความไม่เรียบของพื้นผิวสินค้าที่วัดเป็นระยะทางแนวดิ่ง (Δh) ระหว่างระดับสูงสุดและต่ำสุดของพื้นผิวสินค้าจะต้องไม่เกิน B/10 เมื่อ B คือความกว้างของเรือหน่วยเป็นเมตร โดยค่าสูงสุดของ Δh ที่ยอมรับได้เท่ากับ 2 เมตร หรือ

.2 การขนถ่ายสินค้าขึ้นเรือกระทำโดยใช้อุปกรณ์ปรับระดับที่ได้รับอนุมัติจากกรมเจ้าท่า

ส่วนที่ 6

วิธีการในการกำหนดมุมกอง

6.1 บททั่วไป

มุมกองของสินค้าเทกองที่ไม่เกาะตัวกันต้องวัดโดยวิธีการที่ได้รับอนุมัติจากกรมเจ้าท่าตามที่กำหนดโดย 4.1.4 ของประมวลข้อบังคับนี้

6.2 วิธีการทดสอบที่แนะนำ

มีวิธีการต่างๆ มากมายที่ใช้ในการกำหนดมุมกองของสินค้าเทกองที่ไม่เกาะตัวกัน วิธีทดสอบที่แนะนำมีดังต่อไปนี้

6.2.1 วิธีการแบบ Tilting box

วิธีการทดสอบในห้องปฏิบัติการนี้เหมาะสำหรับสิ่งของที่เป็นเม็ดเล็กๆ ที่ไม่เกาะตัวกัน ซึ่งมีขนาดของเมล็ดไม่เกิน 10 มิลลิเมตร คำอธิบายเกี่ยวกับอุปกรณ์และขั้นตอนของวิธีการนี้กำหนดไว้ใน 2.1 ของภาคผนวก 2

6.2.2 วิธีการแบบ Shipboard test

ในกรณีที่ไม่มีเครื่องมือสำหรับวิธีการแบบ Tilting box ขั้นตอนทางเลือกอื่นในการกำหนดมุมกองโดยประมาณกำหนดไว้ใน 2.2 ของภาคผนวก 2

ส่วนที่ 7

สินค้าที่อาจกลายเป็นของเหลว

7.1 บทนำ

7.1.1 จุดประสงค์ของส่วนนี้คือเพื่อให้นายเรือและบุคคลอื่นที่มีหน้าที่รับผิดชอบในการขนถ่ายสินค้าขึ้นเรือและบรรทุกสินค้าเทกองให้ความสนใจกับความเสี่ยงที่เกี่ยวข้องกับการกลายเป็นของเหลวของสินค้าเทกองและข้อควรระวังเพื่อลดความเสี่ยง สินค้าดังกล่าวอาจปรากฏอยู่ในลักษณะเป็นเม็ดเล็กๆ ค่อนข้างแห้งขณะขนถ่ายขึ้นเรือ และยังอาจมีความชื้นเพียงพอที่จะกลายเป็นของเหลวภายใต้การกระตุ้นของการอัดแน่นและการสั่นสะเทือนที่เกิดขึ้นในระหว่างการเดินทาง

7.1.2 การเคลื่อนไหวของเรืออาจทำให้สินค้าเคลื่อนตัวมากพอที่จะพลิกคว่ำเรือ การเคลื่อนตัวของสินค้าแบ่งออกเป็นสองประเภท ได้แก่ การเลื่อนไถล (Sliding failure) หรือการกลายเป็นของเหลว (Liquefaction) การปรับระดับสินค้าตามส่วนที่ 5 สามารถป้องกันการเลื่อนไถล (Sliding failure) ได้

7.1.3 สินค้าที่อาจกลายเป็นของเหลวบางชนิดยังอาจเกิดความร้อนขึ้นเองได้ด้วย

7.2 สภาพของการเป็นอันตราย

7.2.1 สินค้ากลุ่ม เอ ประกอบด้วยสัดส่วนของอนุภาคขนาดเล็กและความชื้นจำนวนหนึ่ง สินค้ากลุ่ม เอ อาจกลายเป็นของเหลวในระหว่างการเดินทาง แม้ว่าสินค้าจะเกาะตัวกันและได้มีการปรับระดับสินค้าแล้ว การกลายเป็นของเหลวส่งผลให้สินค้าเคลื่อนตัว ปรากฏการณ์นี้อธิบายได้ดังนี้

.1 ปริมาตรของช่องว่างระหว่างอนุภาคลดลงเมื่อสินค้าถูกอัดแน่นเนื่องจากการเคลื่อนที่ของเรือ ฯลฯ

.2 การลดลงของช่องว่างระหว่างอนุภาคของสินค้าทำให้แรงดันน้ำในช่องว่างเพิ่มขึ้น และ

.3 การเพิ่มของแรงดันน้ำช่วยลดแรงเสียดทานระหว่างอนุภาคของสินค้า ส่งผลให้ความแข็งแรงทางแนวเฉือนของสินค้าลดลง

7.2.2 การกลายเป็นของเหลวจะไม่เกิดขึ้นเมื่อสินค้าประกอบด้วยอนุภาคขนาดใหญ่หรือรวมเป็นกลุ่มก้อนและน้ำไหลผ่านช่องว่างระหว่างอนุภาคและไม่มีแรงดันน้ำเพิ่มขึ้น

7.2.3 การเคลื่อนตัวของสินค้าที่เกิดจากการกลายเป็นของเหลวอาจเกิดขึ้นเมื่อปริมาณความชื้นเกินกว่าขีดจำกัดของความชื้นที่สามารถขนส่งได้ สินค้าบางชนิดมีความอ่อนไหวต่อการเคลื่อนย้ายของความชื้นและอาจพัฒนาฐานเปียกที่เป็นอันตราย แม้ว่าปริมาณความชื้นเฉลี่ยจะน้อยกว่าขีดจำกัดของความชื้นที่สามารถขนส่งได้ แม้ว่าพื้นผิวสินค้าอาจแห้ง การกลายเป็นของเหลวที่ไม่สามารถตรวจจับได้อาจเกิดขึ้นส่งผลให้เกิดการเคลื่อนตัวของสินค้า สินค้าที่มีความชื้นสูงมีแนวโน้มที่จะเลื่อนโดยเฉพาะอย่างยิ่งเมื่อสินค้านั้นตื้นและมีมุมเอียงมาก

7.2.4 ในสถานะของเหลวที่มีความหนืด สินค้าอาจไหลไปทางด้านหนึ่งของเรือด้วยการโคลง แต่ไม่กลับมาพร้อมกับการโคลงในทางตรงข้าม เพราะเหตุนี้เรืออาจถึงมุมเอียงที่มีอันตรายและพลิกคว่ำอย่างกะทันหัน

7.3 ข้อกำหนดสำหรับสินค้าที่อาจกลายเป็นของเหลว

7.3.1 บททั่วไป

7.3.1.1 คอนเซนเตรทหรือสินค้าอื่นที่อาจกลายเป็นของเหลวจะได้รับการยอมรับสำหรับการขนถ่ายสินค้าขึ้นเรือได้ เมื่อปริมาณความชื้นที่แท้จริงของสินค้าน้อยกว่าขีดจำกัดของความชื้นที่สามารถขนส่งได้เท่านั้น แม้จะมีข้อกำหนดนี้ สินค้าที่มีความชื้นเกินขีดจำกัดของความชื้นที่สามารถขนส่งได้อาจขนส่งโดยเรือสินค้าที่ต่อสร้างขึ้นหรือติดตั้งอุปกรณ์พิเศษเพื่อจำกัดการเคลื่อนตัวของสินค้าตามที่กำหนดไว้ใน 7.3.2

7.3.1.2 แม้จะมีบทบัญญัติใน 1.4 ของประมวลข้อบังคับนี้ ข้อกำหนดใน 4.2.2.9 4.2.2.10 4.3.2 ถึง 4.3.5 4.5 4.6 และ 8 ของประมวลข้อบังคับนี้ไม่ใช้บังคับกับสินค้าที่อาจกลายเป็นของเหลว โดยมีเงื่อนไขว่าสินค้าจะถูกขนส่งโดยเรือสินค้าที่ต่อสร้างขึ้นหรือติดตั้งอุปกรณ์พิเศษเพื่อจำกัดการเคลื่อนตัวของสินค้าตามที่กำหนดไว้ใน 7.3.2 หรือโดยเรือสินค้าที่ต่อสร้างขึ้นพิเศษสำหรับสินค้าที่เป็นผงแห้งที่กำหนดไว้ใน 7.3.3

7.3.1.3 สินค้าที่ประกอบด้วยของเหลว นอกเหนือจากสินค้าบรรจุหีบห่อในรูปแบบกระป๋องหรือสินค้าที่คล้ายกันต้องไม่ถูกจัดเก็บไว้ในพื้นที่เก็บสินค้าเดียวกันด้านบนหรืออยู่ติดกับสินค้าเทกองที่เป็นของแข็งในระวาง

7.3.1.4 จะต้องมีมาตรการที่เพียงพอเพื่อป้องกันไม่ให้ของเหลวเข้าไปในพื้นที่เก็บสินค้าที่ซึ่งสินค้าเทกองที่เป็นของแข็งในระวางถูกจัดเก็บอยู่ระหว่างการเดินทาง

7.3.1.5 นายเรือจะต้องระวังเกี่ยวกับอันตรายที่อาจเกิดขึ้นจากการใช้น้ำเพื่อทำให้สินค้าเทกองที่เป็นของแข็งในระวางเย็นลงขณะที่เรืออยู่ในทะเล การใช้น้ำอาจนำปริมาณความชื้นของสินค้าเทกองที่เป็นของแข็งในระวางเหล่านี้ไปสู่ภาวะลื่นไหล (Flow state) เมื่อมีความจำเป็นจะต้องพิจารณาใช้น้ำในรูปแบบการพ่นเป็นละอองน้ำ

7.3.2 เรือสินค้าที่ต่อสร้างขึ้นหรือติดตั้งอุปกรณ์พิเศษเพื่อจำกัดการเคลื่อนตัวของสินค้า

7.3.2.1 เรือสินค้าที่ต่อสร้างขึ้นพิเศษเพื่อจำกัดการเคลื่อนตัวของสินค้าต้องมีขอบเขตเกี่ยวกับโครงสร้างที่ถาวรเพื่อให้มีการจำกัดการเคลื่อนตัวของสินค้าใดๆ ให้อยู่ในระดับที่ยอมรับได้ เรือดังกล่าวต้องมีหลักฐานการอนุมัติจากสำนักมาตรฐานเรือ กรมเจ้าท่าเก็บไว้บนเรือ

7.3.2.2 เรือสินค้าที่ติดตั้งอุปกรณ์พิเศษเพื่อจำกัดการเคลื่อนตัวของสินค้าต้องติดตั้งสิ่งที่แบ่งแยกแบบพกพาที่ออกแบบมาเป็นพิเศษเพื่อจำกัดการเคลื่อนตัวของสินค้าใดๆ ให้อยู่ในระดับที่ยอมรับได้ เรือสินค้าที่ติดตั้งอุปกรณ์พิเศษต้องต้องปฏิบัติข้อกำหนดดังต่อไปนี้

.1 การออกแบบและการจัดวางตำแหน่งของการจัดการพิเศษดังกล่าวต้องจัดให้มีอย่างเพียงพอ ไม่เพียงแต่ควบคุมกำลังที่มหาศาลที่เกิดจากการเคลื่อนตัวของการไหลของสินค้าเทกองที่มีความหนาแน่นสูง แต่จำเป็นต้องลดโมเมนต์คว่ำเรือที่อาจเกิดขึ้นลงในระดับความปลอดภัยที่ยอมรับได้ที่เกิดขึ้นจากการเคลื่อนตัวของสินค้าตามขวางในพื้นที่เก็บสินค้า สิ่งที่แบ่งแยกที่จัดให้มีตามข้อกำหนดนี้ต้องไม่สร้างด้วยไม้

.2 องค์ประกอบของโครงสร้างเรือที่ล้อมรอบสินค้าดังกล่าวต้องมีการเสริมความแข็งแรงตามความจำเป็น

.3 แผนของการจัดการพิเศษ และรายละเอียดของสภาพความทรงตัวซึ่งใช้เป็นพื้นฐานในการออกแบบต้องได้รับการอนุมัติจากสำนักมาตรฐานเรือ กรมเจ้าท่า เรือดังกล่าวต้องมีหลักฐานการอนุมัติจากสำนักมาตรฐานเรือ กรมเจ้าท่าเก็บไว้บนเรือ

7.3.2.3 การยื่นเอกสารให้กับสำนักมาตรฐานเรือ กรมเจ้าท่า เพื่อการขออนุมัติข้างต้น ประกอบด้วย

.1 แบบแปลนโครงสร้างที่เกี่ยวข้อง รวมถึงส่วนตามยาวและส่วนตามขวาง

.2 รายการคำนวณความทรงตัวที่แสดงการกระจายของสินค้าและของเหลวในถังและสินค้าที่อาจกลายเป็นของเหลว โดยคำนึงถึงการจัดการขนถ่ายสินค้าและความเป็นไปได้ในการเคลื่อนตัวของสินค้า และ

.3 ข้อมูลอื่นๆ ที่อาจช่วยในการประเมินตามที่สำนักมาตรฐานเรือ กรมเจ้าท่า กำหนดเพิ่มเติม

7.3.3 เรือสินค้าที่ต่อสร้างขึ้นพิเศษสำหรับสินค้าที่เป็นผงแห้ง

7.3.3.1 เรือสินค้าที่ต่อสร้างขึ้นพิเศษสำหรับสินค้าที่เป็นผงแห้งจะต้องได้รับการออกแบบและต่อสร้างเพื่อ

.1 บรรทุกสินค้าที่เป็นผงแห้งเท่านั้น และ

.2 จัดการกับสินค้าโดยใช้ระบบชนิดปิด โดยอุปกรณ์นิวเมติกส์ซึ่งป้องกันสินค้าจากการสัมผัสกับอากาศ

7.3.3.2 เรือดังกล่าวต้องมีหลักฐานการอนุมัติจากสำนักมาตรฐานเรือ กรมเจ้าท่าเก็บไว้บนเรือ

ส่วนที่ 8

ขั้นตอนการทดสอบของสินค้าที่อาจกลายเป็นของเหลว

8.1 บททั่วไป

สำหรับสินค้ากลุ่ม เอ จะต้องมีการกำหนดปริมาณความชื้นจริงและขีดจำกัดของความชื้นที่สามารถขนส่งได้ตามขั้นตอนที่กำหนดโดยหน่วยงานที่เหมาะสมตามข้อ 4.1.4 ของประมวลข้อบังคับนี้

8.2 ขั้นตอนการทดสอบการวัดปริมาณความชื้น

ปัจจุบันมีวิธีการระหว่างประเทศและระดับชาติที่ได้รับการยอมรับในการกำหนดปริมาณความชื้นสำหรับสิ่งของต่างๆ โดยมีการอ้างอิงอยู่ใน 1.1.4.4 ของภาคผนวก 2

8.3 วิธีการกำหนดขีดจำกัดของความชื้นที่สามารถขนส่งได้

วิธีการแนะนำสำหรับการกำหนดขีดจำกัดของความชื้นที่สามารถขนส่งได้ปรากฏอยู่ในภาคผนวก 2

8.4 ขั้นตอนการทดสอบเพิ่มเติมสำหรับการกำหนดความเป็นไปได้ของการกลายเป็นของเหลว

8.4.1 นายเรืออาจดำเนินการทดสอบเพื่อประเมินความเป็นไปได้ของการกลายเป็นของเหลวของสินค้าบนเรือหรือที่ท่าเทียบเรือ โดยวิธีการเพิ่มเติมดังต่อไปนี้

เตรียมกระป๋องทรงกระบอกหรือภาชนะบรรจุที่คล้ายคลึงกัน (ความจุ 0.5 ถึง 1 ลิตร) พร้อมตัวอย่างของสิ่งของเติมเข้าไปครึ่งหนึ่ง และจับกระป๋องด้วยมือเดียวแล้วกระแทกกับพื้นผิวที่แข็ง เช่น โต๊ะแข็ง จากความสูงประมาณ 0.2 เมตร โดยทำซ้ำ 25 ครั้ง เว้นระยะเวลาห่างกัน 1 หรือ 2 วินาที จากนั้นให้ตรวจสอบความชื้นอิสระหรือสภาพของเหลวบนพื้นผิว หากความชื้นอิสระหรือสภาพของเหลวปรากฏขึ้น ควรเตรียมการทดสอบทางห้องปฏิบัติการเพิ่มเติมเกี่ยวกับสิ่งของนั้นก่อนที่จะยอมรับให้มีการขนถ่ายสินค้าขึ้นเรือ

8.4.2 ถ้าตัวอย่างยังคงแห้ง หลังจากที่ทดสอบกับกระป๋องหรือภาชนะด้วยขั้นตอนข้างต้น ปริมาณความชื้นของสิ่งของอาจยังคงเกินขีดจำกัดของความชื้นที่สามารถขนส่งได้ (TML)

ส่วนที่ 9

สิ่งของที่มีอันตรายจากสารเคมี

9.1 บททั่วไป

สินค้าเทกองที่เป็นของแข็งในระวางซึ่งอาจมีอันตรายจากสารเคมีในระหว่างการขนส่ง เนื่องจากคุณลักษณะหรือคุณสมบัติทางเคมี เป็นสินค้ากลุ่ม บี สิ่งของเหล่านี้สามารถจำแนกได้ดังนี้

.1 สินค้าอันตราย (ตาม 9.2.2) ที่ไม่มีอันตรายจากสารเคมีเพิ่มเติมที่ระบุใน 9.2.3

.2 สิ่งของที่เป็นอันตรายเฉพาะเมื่อบรรทุกในระวาง (ตาม 9.2.3) หรือ

.3 สินค้าอันตรายที่มีอันตรายจากสารเคมีเพิ่มเติมที่ระบุใน 9.2.3 ด้วย

ดังนั้นจึงมีความจำเป็นต้องได้รับข้อมูลที่เป็นปัจจุบันและถูกต้องเกี่ยวกับคุณสมบัติทางกายภาพและทางเคมีของสินค้าที่จะขนส่งในระวาง ก่อนที่จะขนถ่ายสินค้าขึ้นเรือ

9.2 การแบ่งชั้นความเป็นอันตราย

9.2.1 การแบ่งชั้นของสิ่งของที่มีสารเคมีอันตรายและที่จะขนส่งในระวางภายใต้ข้อกำหนดของประมวลข้อบังคับนี้จะต้องเป็นไปตาม 9.2.2 และ 9.2.3

9.2.2 การแบ่งชั้นของสินค้าอันตราย

อนุสัญญาระหว่างประเทศว่าด้วยความปลอดภัยแห่งชีวิตในทะเล (SOLAS) บทที่ VII ข้อบังคับที่ 7 ได้นิยามความหมายของสินค้าอันตรายในรูปแบบของแข็งในระวาง ดังนั้นเพื่อจุดประสงค์ของประมวลข้อบังคับนี้ สินค้าอันตรายจะถูกแบ่งชั้นตามส่วนที่ 2 ของประมวลข้อบังคับระหว่างประเทศว่าด้วยความปลอดภัยในการขนส่งสินค้าอันตรายทางน้ำ (IMDG Code)

9.2.2.1 ชั้น 4.1 ของแข็งไวไฟ

สิ่งของในชั้นนี้เป็นของแข็งที่ติดไฟได้อย่างรวดเร็ว และเป็นของแข็งที่อาจเกิดการลุกไหม้ได้เนื่องจากการเสียดสีกัน

9.2.2.2 ชั้น 4.2 สารที่มีความเสี่ยงต่อการลุกไหม้ได้เอง

สิ่งของในชั้นนี้เป็นสิ่งของที่เมื่อสัมผัสกับอากาศโดยปราศจากพลังงานจากภายนอกมีความเสี่ยงต่อการเกิดความร้อนได้เอง นอกเหนือจากสารที่สามารถลุกติดไฟได้เองในอากาศ

9.2.2.3 ชั้น 4.3 สารที่ให้ก๊าซไวไฟเมื่อสัมผัสกับน้ำ

สิ่งของในชั้นนี้เป็นของแข็งซึ่งเมื่อทำปฏิกิริยากับน้ำแล้วติดไฟได้เอง หรือปล่อยก๊าซไวไฟในปริมาณที่อันตราย

9.2.2.4 ชั้น 5.1 สารออกซิไดส์

สิ่งของในชั้นนี้เป็นสิ่งของที่อาจจะเป็นสาเหตุหรือทำให้สารอื่นเกิดการลุกไหม้โดยการปล่อยออกซิเจน ในขณะที่ตัวของสารเองไม่จำเป็นต้องติดไฟ

9.2.2.5 ชั้น 6.1 สารพิษ

สิ่งของในชั้นนี้เป็นสิ่งของที่อาจทำให้เสียชีวิต หรือบาดเจ็บสาหัส หรือเป็นอันตรายต่อสุขภาพของมนุษย์เมื่อกลืนกิน หรือสูดดม หรือสัมผัสทางผิวหนัง

9.2.2.6 ชั้น 7 วัสดุกัมมันตรังสี

สิ่งของในชั้นนี้เป็นสิ่งของใดก็ตามที่มีนิวไคลด์รังสีโดยที่ทั้งความเข้มข้นของค่ากัมมันตภาพและค่ากัมมันตภาพรวมในสินค้าที่ส่ง มีค่าเกินค่าที่ระบุไว้ในข้อ 2.7.2.2.1 ถึง 2.7.2.2.6 ของประมวลข้อบังคับระหว่างประเทศว่าด้วยความปลอดภัยในการขนส่งสินค้าอันตรายทางน้ำ (IMDG Code)

9.2.2.7 ชั้น 8 สารกัดกร่อน

สิ่งของในชั้นนี้เป็นสิ่งของซึ่งโดยปฏิกิริยาทางเคมีจะทำให้เกิดความเสียหายอย่างรุนแรงเมื่อสัมผัสกับเนื้อเยื่อมีชีวิตหรือจะเกิดความเสียหายอย่างมีนัยสำคัญ หรือแม้กระทั่งทำลายสินค้าอื่นๆ หรือพาหนะในการขนส่งสินค้า

9.2.2.8 ชั้น 9 สารและสิ่งของอันตรายเบ็ดเตล็ด

สิ่งของในชั้นนี้เป็นสารและสิ่งของที่มีความเป็นอันตรายขณะทำการขนส่งที่ไม่เข้าข่ายสินค้าอันตรายในชั้นอื่นๆ

9.2.3 สิ่งของที่เป็นอันตรายเฉพาะเมื่อบรรทุกในระวาง (MHB)

9.2.3.1 บททั่วไป

9.2.3.1.1 สิ่งของเหล่านี้เมื่อบรรทุกในระวางจะมีอันตรายจากสารเคมี นอกเหนือจากอันตรายโดยระบบการแบ่งชั้นของประมวลข้อบังคับระหว่างประเทศว่าด้วยความปลอดภัยในการขนส่งสินค้าอันตรายทางน้ำ (IMDG Code) สิ่งของเหล่านี้เมื่อบรรทุกในระวางจะมีความเสี่ยงสูง และต้องการความระมัดระวังเป็นพิเศษ

9.2.3.1.2 สิ่งของจะถูกจัดประเภทเป็นสิ่งของที่เป็นอันตรายเฉพาะเมื่อบรรทุกในระวาง (MHB) ถ้าสิ่งของมีอันตรายจากสารเคมีอย่างน้อยหนึ่งอย่าง (ไม่รวมอันตรายซึ่งครอบคลุมโดยระบบการแบ่งชั้นของ IMDG Code) ตามที่กำหนดไว้ด้านล่าง เมื่อมีการกำหนดวิธีการทดสอบต้องใช้ตัวอย่างที่เป็นตัวแทนของสินค้าที่จะขนส่งในการทดสอบ จะต้องเก็บตัวอย่างเข้าไปจากพื้นผิว 200 ถึง 360 มิลลิเมตร ทุกๆ ระยะ 3 เมตร ตลอดความยาวของกองสินค้า

9.2.3.1.3 สิ่งของอาจถูกจัดประเภทเป็นสิ่งของที่เป็นอันตรายเฉพาะเมื่อบรรทุกในระวาง (MHB) โดยการเปรียบเทียบกับสินค้าที่คล้ายคลึงกันที่มีคุณสมบัติอันตรายที่ทราบหรือโดยการบันทึกจากอุบัติเหตุ

9.2.3.1.4 ถึงแม้ว่าความเป็นอันตรายทางเคมีจะต้องมีการกำหนดอย่างใกล้เคียงเพื่อสร้างวิธีการแบบเดียวกันในการจัดประเภทสิ่งของที่เป็นอันตรายเฉพาะเมื่อบรรทุกในระวาง (MHB) ในกรณีที่ประสบการณ์ของมนุษย์หรือปัจจัยอื่นๆ บ่งชี้ว่าจำเป็นต้องพิจารณาอันตรายจากสารเคมีอื่นๆ จะต้องนำสิ่งเหล่านี้มาพิจารณาด้วยเสมอ ในกรณีที่การเบี่ยงเบนจากอันตรายทางเคมีที่อธิบายไว้ใน 9.2.3.2 ถึง 9.2.3.7 ได้รับการยอมรับ

(อันตรายอื่นๆ (OH)) จะต้องมีการบันทึกอย่างเหมาะสมพร้อมเหตุผล อันตรายอื่นๆ จะรวมอยู่ในส่วนของ "อันตราย" ในตารางเฉพาะรายของสินค้า

9.2.3.1.5 จะมีการระบุสัญลักษณ์อ้างอิงไว้ในช่อง “MHB” ของตารางลักษณะสำหรับแต่ละตารางเฉพาะรายของสินค้าที่ถูกจัดประเภทเป็นสิ่งของที่เป็นอันตรายเฉพาะเมื่อบรรทุกในระวาง (MHB) เมื่อสิ่งของมีอันตรายจากสารเคมีอย่างน้อยหนึ่งอย่างตามที่กำหนดไว้ด้านล่าง สัญลักษณ์อ้างอิงของแต่ละความเป็นอันตรายจะรวมอยู่ในช่อง “MHB” ตารางสรุปของสัญลักษณ์อ้างอิงแสดงอยู่ในตารางด้านล่าง

อันตรายจากสารเคมี	**สัญลักษณ์อ้างอิง**
ของแข็งที่ติดไฟได้	CB
ของแข็งที่เกิดความร้อนด้วยตัวเอง	SH
ของแข็งที่ปล่อยก๊าซไวไฟเมื่อเปียก	WF
ของแข็งที่ปล่อยก๊าซพิษเมื่อเปียก	WT
ของแข็งมีพิษ	TX
ของแข็งที่มีฤทธิ์กัดกร่อน	CR
อันตรายอื่นๆ	OH

9.2.3.2 ของแข็งที่ติดไฟได้: MHB (CB)

9.2.3.2.1 สิ่งของเหล่านี้ติดไฟง่ายหรือเกิดประกายไฟง่ายเมื่อขนส่งในระวาง และไม่เป็นไปตามเกณฑ์ที่กำหนดไว้สำหรับการรวมไว้ในชั้น 4.1 (ดู 9.2.2.1 ของประมวลข้อบังคับนี้)

9.2.3.2.2 สิ่งของที่มีลักษณะเป็นผง เม็ดเล็ก หรือคล้ายแป้งเปียกต้องถูกจัดประเภทเป็นสิ่งของที่เป็นอันตรายเฉพาะเมื่อบรรทุกในระวาง (MHB) เมื่อเวลาของการเผาไหม้ของการทดสอบอย่างน้อยหนึ่งครั้งที่ดำเนินการตามวิธีการทดสอบเบื้องต้นที่อธิบายไว้ในคู่มือการทดสอบและเกณฑ์ของสหประชาชาติ ตอนที่ III, 33.2.1.4.3.1 น้อยกว่า 2 นาที ผงโลหะหรือโลหะผสมต้องถูกจัดประเภทเป็นสิ่งของที่เป็นอันตรายเฉพาะเมื่อบรรทุกในระวาง (MHB) เมื่อสามารถเกิดประกายไฟและปฏิกิริยากระจายไปตามความยาวทั้งหมดของตัวอย่างใน 20 นาทีหรือน้อยกว่า ตัวอย่างทดสอบในการทดสอบเบื้องต้นมีความยาว 200 มิลลิเมตร ข้อมูลสรุปของวิธีการนี้แสดงอยู่ในตารางด้านล่าง

สินค้าของแข็ง	**ชั้นอันตราย 4.1, กลุ่มการบรรจุ III** **เวลาเผาไหม้, ระยะที่เผาไหม้**	**MHB** **เวลาเผาไหม้, ระยะที่เผาไหม้**
ผงโลหะ	มากกว่า 5 นาที แต่ไม่มากกว่า 10 นาที, 250 มิลลิเมตร	≤ 20 นาที, 200 มิลลิเมตร
สิ่งของที่เป็นของแข็ง	< 45 วินาที, 100 มิลลิเมตร	≤ 2 นาที, 200 มิลลิเมตร

9.2.3.3 ของแข็งที่เกิดความร้อนด้วยตัวเอง: MHB (SH)

9.2.3.3.1 สิ่งของเหล่านี้เกิดความร้อนด้วยตัวเองเมื่อขนส่งในระวาง และไม่เป็นไปตามเกณฑ์ที่กำหนดไว้สำหรับการรวมไว้ในชั้น 4.2 (ดู 9.2.2.2 ของประมวลข้อบังคับนี้)

9.2.3.3.2 สิ่งของต้องถูกจัดประเภทเป็นสิ่งของที่เป็นอันตรายเฉพาะเมื่อบรรทุกในระวาง (MHB) หากในการทดสอบที่ดำเนินการตามวิธีการทดสอบที่ให้ไว้ในคู่มือการทดสอบและเกณฑ์ขององค์การสหประชาชาติ ตอนที่ III, 33.3.1.6 และอุณหภูมิของตัวอย่างทดสอบเพิ่มขึ้นมากกว่า 10 องศาเซลเซียส เมื่อใช้ตัวอย่างลูกบาศก์ที่มีขนาด 100 มิลลิเมตร ที่ 140 องศาเซลเซียส และที่ 100 องศาเซลเซียส ผังงานต่อไปนี้แสดงให้เห็นถึงขั้นตอนการทดสอบ

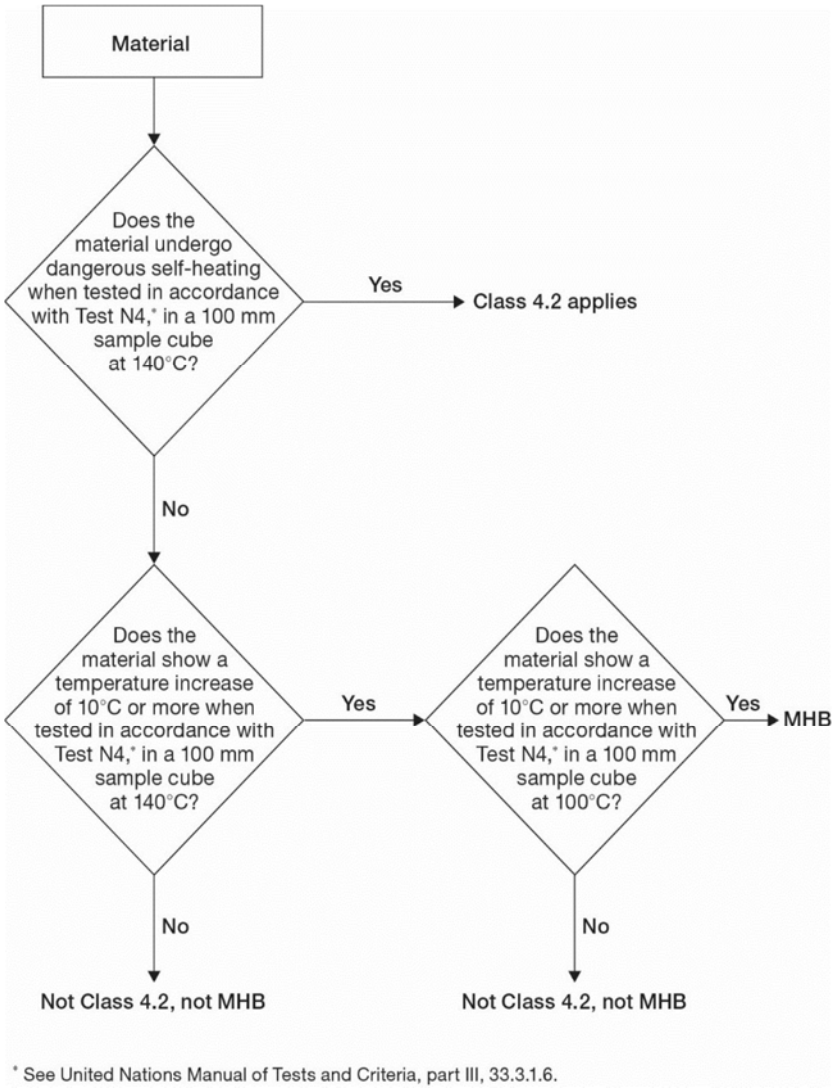

9.2.3.3.3 นอกจากนี้ สิ่งของต้องถูกจัดประเภทเป็นสิ่งของที่เป็นอันตรายเฉพาะเมื่อบรรทุกในระวาง (MHB) หากพบว่าอุณหภูมิสูงขึ้น 10 องศาเซลเซียสหรือมากกว่าอุณหภูมิโดยรอบในระหว่างส่วนใดๆ ของการทดสอบที่ดำเนินการตามวิธีการทดสอบที่อธิบายไว้ในคู่มือการทดสอบและเกณฑ์ขององค์การสหประชาชาติ ตอนที่ III, 33.4.1.4.3.5 เมื่อทำการทดสอบนี้ควรวัดอุณหภูมิของตัวอย่างอย่างต่อเนื่องตลอด 48 ชั่วโมง หากสิ้นสุดระยะเวลา 48 ชั่วโมงและอุณหภูมิยังคงกำลังเพิ่มขึ้น ระยะเวลาการทดสอบจะต้องถูกขยายตามวิธีการทดสอบ

9.2.3.4 ของแข็งที่ปล่อยก๊าซไวไฟเมื่อเปียก: MHB (WF)

9.2.3.4.1 สิ่งของเหล่านี้ปล่อยก๊าซไวไฟเมื่อสัมผัสกับน้ำเมื่อขนส่งในระวาง และไม่เป็นไปตามเกณฑ์ที่กำหนดไว้สำหรับการรวมไว้ในชั้น 4.3 (ดู 9.2.2.3 ของประมวลข้อบังคับนี้)

9.2.3.4.2 สิ่งของต้องถูกจัดประเภทเป็นสิ่งของที่เป็นอันตรายเฉพาะเมื่อบรรทุกในระวาง (MHB) หากในการทดสอบที่ดำเนินการตามวิธีการทดสอบที่ให้ไว้ในคู่มือการทดสอบและเกณฑ์ขององค์การสหประชาชาติ ตอนที่ III, 33.4.1 และอัตราการปล่อยก๊าซไวไฟนั้นมากกว่าศูนย์ เมื่อทำการทดสอบนี้จะต้องคำนวณอัตราการปล่อยก๊าซทุกๆ 1 ชั่วโมง ตลอดเป็นเวลา 48 ชั่วโมง หากสิ้นสุดระยะเวลา 48 ชั่วโมงและอัตราการปล่อยยังคงกำลังเพิ่มขึ้น ระยะเวลาการทดสอบจะต้องถูกขยายตามวิธีการทดสอบ

9.2.3.5 ของแข็งที่ปล่อยก๊าซพิษเมื่อเปียก: MHB (WT)

9.2.3.5.1 สิ่งของเหล่านี้ปล่อยก๊าซพิษเมื่อสัมผัสกับน้ำเมื่อขนส่งในระวาง

9.2.3.5.2 สิ่งของต้องถูกจัดประเภทเป็นสิ่งของที่เป็นอันตรายเฉพาะเมื่อบรรทุกในระวาง (MHB) หากในการทดสอบที่ดำเนินการตามวิธีการทดสอบที่ให้ไว้ในคู่มือการทดสอบและเกณฑ์ขององค์การสหประชาชาติ ตอนที่ III, 33.4.1 และอัตราการปล่อยก๊าซพิษนั้นมากกว่าศูนย์ จะต้องทำการวัดการปล่อยก๊าซพิษโดยใช้ขั้นตอนการทดสอบเดียวกันกับการปล่อยก๊าซไวไฟตามที่กำหนดในวิธีการทดสอบ เมื่อทำการทดสอบนี้จะต้องคำนวณอัตราการปล่อยก๊าซทุกๆ 1 ชั่วโมง ตลอดเป็นเวลา 48 ชั่วโมง หากสิ้นสุดระยะเวลา 48 ชั่วโมงและอัตราการปล่อยยังคงกำลังเพิ่มขึ้น ระยะเวลาการทดสอบจะต้องถูกขยายตามวิธีการทดสอบ

9.2.3.5.3 ก๊าซจะต้องถูกเก็บรวบรวมตลอดช่วงเวลาทดสอบที่กำหนดไว้ข้างต้น ก๊าซจะได้รับการวิเคราะห์ทางเคมีและทดสอบความเป็นพิษหากไม่เป็นที่รู้จักและไม่มีข้อมูลความเป็นพิษทางการหายใจแบบเฉียบพลัน ถ้าก๊าซเป็นที่รู้จัก ความเป็นพิษทางการหายใจจะต้องถูกประเมินตามข้อมูลที่มีอยู่ทั้งหมดโดยใช้การทดสอบเป็นทางเลือกสุดท้ายในการหาข้อสรุปของความเป็นอันตรายนี้ ก๊าซพิษในส่วนนี้คือก๊าซที่แสดงความเป็นพิษทางการหายใจแบบเฉียบพลัน (LC_{50}) ที่หรือต่ำกว่า 20,000 ppmV หรือ 20 mg/L โดยการทดสอบ 4 ชั่วโมง (GHS Acute Toxicity Gases/Vapours Category 4)

9.2.3.6 ของแข็งมีพิษ: MHB (TX)

9.2.3.6.1 สิ่งของเหล่านี้มีพิษที่เป็นอันตรายกับมนุษย์ถ้าสูดดมหรือสัมผัสกับผิวหนัง เมื่อขนถ่ายสินค้าขึ้นเรือ ขนถ่ายสินค้าออกจากเรือ หรือขนส่งในระวาง และไม่เป็นไปตามเกณฑ์ที่กำหนดไว้สำหรับการรวมไว้ในชั้น 6.1 (ดู 9.2.2.5 ของประมวลข้อบังคับนี้)

9.2.3.6.2 สิ่งของต้องถูกจัดประเภทเป็นสิ่งของที่เป็นอันตรายเฉพาะเมื่อบรรทุกในระวาง (MHB) ตามเกณฑ์ที่วางไว้ในส่วนที่ 3 ของ GHS

.1 สินค้าที่ก่อให้เกิดฝุ่นที่มีความเป็นพิษทางการหายใจแบบเฉียบพลัน (LC_{50}) ที่ 1-5 mg/L โดยการทดสอบ 4 ชั่วโมง (GHS Acute Toxicity Dusts Category 4)

.2 สินค้าที่ก่อให้เกิดฝุ่นที่แสดงความเป็นพิษทางการหายใจเท่ากับหรือน้อยกว่า 1 mg/L/4 h (GHS Specific Target Organ Toxicity Single Exposure Inhalation Dust Category 1) หรือต่ำกว่า 0.02 mg/L/6 h/d (GHS Specific Target Organ Toxicity Repeated Dose Inhalation Dust Category 1)

.3 สินค้าที่แสดงความเป็นพิษทางผิวหนังแบบเฉียบพลัน (LD_{50}) ที่ 1,000-2,000 mg/kg (GHS Acute Toxicity Dermal Category 4)

.4 สินค้าที่แสดงความเป็นพิษทางผิวหนังที่หรือต่ำกว่า 1,000 mg (GHS Specific Target Organ Toxicity Single Exposure Dermal Category 1) หรือต่ำกว่า 20 mg/kg bw/d โดยการทดสอบ 90 วัน (GHS Specific Target Organ Toxicity Repeated Dose Dermal Category 1)

.5 สินค้าที่แสดงสารก่อมะเร็ง (GHS Category 1A and 1B), ฤทธิ์ก่อกลายพันธุ์ (GHS Category 1A and 1B) หรือความเป็นพิษต่อระบบสืบพันธุ์ (GHS Category 1A and 1B)

9.2.3.7 ของแข็งที่มีฤทธิ์กัดกร่อน: MHB (CR)

9.2.3.7.1 สิ่งของเหล่านี้กัดกร่อนผิวหนัง ดวงตา หรือโลหะ หรือเป็นตัวเพิ่มความไวต่อการกระตุ้นอาการแพ้ต่อระบบทางเดินหายใจ และไม่เป็นไปตามเกณฑ์ที่กำหนดไว้สำหรับการรวมไว้ในชั้น 8 (ดู 9.2.2.7 ของประมวลข้อบังคับนี้)

9.2.3.7.2 สิ่งของต้องถูกจัดประเภทเป็นสิ่งของที่เป็นอันตรายเฉพาะเมื่อบรรทุกในระวาง (MHB) ตามเกณฑ์ที่วางไว้ในส่วนที่ 3 ของ GHS

.1 สินค้าที่เป็นที่รู้จักกันว่าเป็นตัวเพิ่มความไวต่อการกระตุ้นอาการแพ้ต่อระบบทางเดินหายใจ (GHS Respiratory Sensitization Category 1)

.2 สินค้าที่แสดงอาการระคายเคืองผิวหนังที่มีค่าเฉลี่ยที่หรือสูงกว่า 2.3 สำหรับ erythema/eschar หรือ oedema (GHS Skin Corrosion/Irritation Category 2)

.3 สินค้าที่แสดงอาการระคายเคืองตาที่มีค่าเฉลี่ยที่หรือสูงกว่า 1 สำหรับ corneal opacity/irititis หรือ 2 สำหรับ conjunctival redness/oedema (GHS Serious Eye Damage Category 1 or Eye Irritation Category 2A)

9.2.3.7.3 สิ่งของต้องถูกจัดประเภทเป็นสิ่งของที่เป็นอันตรายเฉพาะเมื่อบรรทุกในระวาง (MHB) เมื่ออัตราการกัดกร่อนบนพื้นผิวเหล็กหรืออลูมิเนียมอยู่ระหว่าง 4 มิลลิเมตรและ 6.25 มิลลิเมตร ต่อปีที่อุณหภูมิทดสอบ 55 องศาเซลเซียสเมื่อทดสอบกับสิ่งของทั้งสอง สำหรับวัตถุประสงค์ในการทดสอบเหล็กประเภท S235JR+CR (1.0037 resp. St 37-2), S275J2G3+CR (1.0144 resp. St 44-3) ต้องใช้ ISO 3574:1999, Unified Numbering System (UNS) G10200 หรือ SAE 1020 และสำหรับการทดสอบอลูมิเนียม non-clad ประเภท 7075-T6 หรือ AZ5GU T6 การทดสอบที่ยอมรับได้มีกำหนดไว้ในคู่มือการทดสอบและเกณฑ์ของสหประชาชาติตอนที่ III ส่วนที่ 37 เมื่อทำการทดสอบนี้ตัวอย่างจะต้องมีความชื้นอย่างน้อย 10% โดยมวล ถ้าหากตัวอย่างที่เป็นตัวแทนของสินค้าที่จะขนส่งไม่มีความชื้นมากกว่า 10% โดยมวล จะต้องเติมน้ำเข้าไปในตัวอย่าง

9.3 ข้อกำหนดในการจัดเก็บและการจัดแยก

9.3.1 ข้อกำหนดทั่วไป

9.3.1.1 อันตรายที่อาจเกิดขึ้นกับสินค้ากลุ่ม บี และอยู่ภายใต้การแบ่งชั้นของ 9.2.2 หรือการจัดประเภทของ 9.2.3 นำมาซึ่งความจำเป็นในการจัดแยกสินค้าที่เข้ากันไม่ได้ การจัดแยกจะต้องคำนึงถึงอันตรายย่อยที่ระบุไว้ด้วย

9.3.1.2 นอกเหนือจากการจัดแยกทั่วไประหว่างชั้นทั้งหมดของสิ่งของแล้ว ในบางครั้งอาจมีความจำเป็นต้องแยกสิ่งของเฉพาะรายออกจากกัน ในกรณีที่มีการจัดแยกจากสิ่งของที่ติดไฟได้จะต้องเข้าใจว่าจะไม่รวมวัสดุสำหรับการบรรจุหีบห่อ Ceiling หรือ Dunnage เข้าไป ในกรณีเหล่านี้จะต้องมีไว้ให้น้อยที่สุด

9.3.1.3 เพื่อวัตถุประสงค์ในการจัดแยกสิ่งของที่เข้ากันไม่ได้ คำว่า “ระวางสินค้า” และ “ห้องกั้น” หมายถึงพื้นที่เก็บสินค้าที่ล้อมรอบด้วยฝากั้นเหล็ก หรือแผ่นเหล็กตัวเรือและโดยดาดฟ้าเหล็ก ขอบเขตของพื้นที่ดังกล่าวจะต้องทนต่อไฟและของเหลว

9.3.1.4 เมื่อจะมีการบรรทุกสินค้าเทกองที่เป็นของแข็งในระวางกลุ่ม บี ที่แตกต่างกัน 2 ประเภทหรือมากกว่า การจัดแยกสินค้าจะต้องเป็นไปตาม 9.3.4

9.3.1.5 ในกรณีที่มีการบรรทุกสินค้าเทกองที่เป็นของแข็งในระวางหลากหลายชนิดในพื้นที่เก็บสินค้าเดียวกัน จะต้องบังคับใช้บทบัญญัติในการจัดแยกที่เข้มงวดที่สุดที่ใช้กับสินค้าหลากหลายชนิดใดๆ ในพื้นที่เก็บสินค้านั้นทั้งหมด

9.3.1.6 เมื่อจะมีการบรรทุกสินค้าเทกองที่เป็นของแข็งในระวางกลุ่ม บี และสินค้าอันตรายในรูปแบบบรรจุหีบห่อ การจักแยกสินค้าจะต้องเป็นไปตาม 9.3.3

9.3.1.7 จะต้องไม่จัดการกับสิ่งของที่เข้ากันไม่ได้พร้อมกัน เมื่อการขนถ่ายสินค้าหนึ่งประเภทขึ้นเรือดำเนินการแล้วเสร็จ จะต้องทำการปิดฝาระวางของพื้นที่เก็บสินค้าและทำความสะอาดเศษสินค้าที่ตกค้างบนดาดฟ้าเรือก่อนที่จะเริ่มทำการขนถ่ายสิ่งของอื่นๆ ขึ้นเรือ ในกรณีขนถ่ายสินค้าออกจากเรือให้ปฏิบัติตามขั้นตอนเดียวกัน

9.3.1.8 เพื่อหลีกเลี่ยงการปนเปื้อน จะต้องเก็บสินค้าจำพวกอาหารทั้งหมดไว้

.1 "แยกออกจาก" สิ่งของที่ระบุว่าเป็นพิษ

.2 “แยกออกโดยห้องกั้นหรือระวางสินค้าจาก” สิ่งของที่ติดเชื้อทั้งหมด

.3 “แยกออกจาก” วัสดุกัมมันตรังสี

.4 “ห่างออกจาก” สิ่งของที่มีฤทธิ์กัดกร่อน

คำศัพท์ถูกกำหนดไว้ใน 9.3.3 และ 9.3.4 ตามความเหมาะสม

9.3.1.9 สิ่งของที่อาจปล่อยก๊าซพิษในปริมาณที่เพียงพอที่จะส่งผลกระทบต่อสุขภาพจะต้องไม่ถูกจัดเก็บไว้ในพื้นที่ที่ซึ่งก๊าซดังกล่าวอาจแทรกซึมเข้าไปในพื้นที่อยู่อาศัยหรือระบบระบายอากาศที่เชื่อมต่อกับพื้นที่อยู่อาศัย

9.3.1.10 สิ่งของที่มีอันตรายจากการกัดกร่อนที่มีความรุนแรงซึ่งส่งผลกระทบต่อเนื้อเยื่อของมนุษย์หรือโครงสร้างของเรือ จะมีการขนส่งขึ้นเรือได้ก็ต่อเมื่อมีการดำเนินการเกี่ยวกับข้อควรระวังและมาตรการป้องกันที่เพียงพอแล้วเท่านั้น

9.3.1.11 ภายหลังจากขนถ่ายสินค้าที่เป็นพิษหรือออกซิไดส์ออกจากเรือ พื้นที่ที่ใช้สำหรับการขนส่งจะต้องได้รับการตรวจสอบการปนเปื้อนก่อนนำไปใช้กับสินค้าอื่น พื้นที่ที่มีการปนเปื้อนต้องทำความสะอาดและตรวจสอบอย่างเหมาะสมก่อนนำไปใช้กับสินค้าอื่น

9.3.1.12 ภายหลังจากขนถ่ายสินค้าออกจากเรือ จะต้องทำการตรวจสอบเศษสินค้าที่ตกค้างอย่างรอบคอบและต้องกำจัดออกก่อนที่จะมีการนำเรือไปบรรทุกสินค้าอื่น

9.3.1.13 สำหรับสินค้าที่ในกรณีฉุกเฉินจะต้องเปิดฝาระวาง ฝาระวางเหล่านี้จะต้องอยู่ในสภาพที่ทำให้สามารถเปิดออกได้อย่างอิสระ

9.3.2 ข้อกำหนดพิเศษ

9.3.2.1 สิ่งของในชั้น 4.1, 4.2 และ 4.3

9.3.2.1.1 สิ่งของของชั้นเหล่านี้จะต้องเก็บไว้ในที่เย็นและแห้งเท่าที่จะปฏิบัติได้อย่างสมเหตุสมผล และเว้นแต่จะกำหนดเป็นอย่างอื่นในประมวลข้อบังคับนี้ จะต้องจัดเก็บไว้ “ห่างออกจาก” แหล่งกำเนิดความร้อนหรือประกายไฟทั้งหมด

9.3.2.1.2 อุปกรณ์ไฟฟ้าและสายเคเบิลจะต้องอยู่ในสภาพดีและมีการป้องกันอย่างเหมาะสมจากการลัดวงจรและประกายไฟ ในกรณีที่จำเป็นต้องใช้ฝากั้นเพื่อให้เหมาะสมกับวัตถุประสงค์ในการจัดแยก การแทรกสายเคเบิลและท่อร้อยสายไฟของดาดฟ้าและฝากั้นจะต้องถูกปิดผนึกกับทางเดินของก๊าซและไอน้ำ

9.3.2.1.3 สินค้าที่อาจจะปล่อยไอหรือก๊าซที่สามารถสร้างส่วนผสมที่ระเบิดได้กับอากาศจะต้องถูกจัดเก็บไว้ในพื้นที่ที่มีการระบายอากาศด้วยเครื่องกล

9.3.2.1.4 จะต้องมีการห้ามสูบบุหรี่ในพื้นที่อันตราย และต้องแสดงเครื่องหมาย “NO SMOKING” อย่างชัดเจน

9.3.2.2 สิ่งของในชั้น 5.1

9.3.2.2.1 สินค้าของชั้นนี้จะต้องเก็บไว้ในที่เย็นและแห้งเท่าที่จะปฏิบัติได้อย่างสมเหตุสมผล และเว้นแต่จะกำหนดเป็นอย่างอื่นในประมวลข้อบังคับนี้ จะต้องจัดเก็บไว้ “ห่างออกจาก” แหล่งกำเนิดความร้อนหรือประกายไฟทั้งหมด รวมถึงจะต้องจัดเก็บ “แยกออกจาก” สิ่งของที่ติดไฟได้อื่นๆ

9.3.2.2.2 ก่อนที่จะขนถ่ายสินค้าของชั้นนี้ขึ้นเรือ จะต้องให้ความสนใจเป็นพิเศษในการทำความสะอาดพื้นที่เก็บสินค้าที่จะทำการขนถ่ายสินค้าขึ้นเรือ จะต้องใช้สิ่งของที่ใช้ในการผูกรัดและป้องกันที่ไม่ติดไฟเท่าที่จะปฏิบัติได้อย่างสมเหตุสมผล และจะต้องใช้ dunnage ที่ทำจากไม้ให้น้อยที่สุด

9.3.2.2.3 จะต้องระวังเพื่อหลีกเลี่ยงการแทรกซึมของสิ่งของออกซิไดซ์เข้าไปในพื้นที่เก็บสินค้าอื่น ท้องเรือและพื้นที่อื่นๆ ซึ่งอาจมีสิ่งของที่ติดไฟได้

9.3.2.3 สิ่งของในชั้น 7

9.3.2.3.1 พื้นที่เก็บสินค้าที่ใช้ในการขนส่งวัสดุกัมมันตรังสีกัมมันตภาพจำเพาะต่ำ (LSA-I) และวัตถุที่มีการเปรอะเปื้อนบนพื้นผิว (SCO-I) จะต้องไม่ถูกใช้กับสินค้าอื่นๆ จนกว่าจะทำชำระล้างการปนเปื้อนโดยบุคคลที่มีคุณสมบัติ เพื่อให้การปนเปื้อนแบบไม่ติดแน่นบนพื้นผิวใดๆ เมื่อเฉลี่ยบนพื้นที่ 300 ตารางเซนติเมตร ไม่เกินระดับต่อไปนี้

4 Bq/cm^2 (10^{-4} μCi/cm^2)	for beta and gamma emitters and the low-toxicity alpha emitters; natural uranium; natural thorium; uranium-235 or uranium-238; thorium-232; thorium-228 and thorium-230 when contained in ores, physical or chemical concentrates; radionuclides with a half-life of less than 10 days; และ
0.4 Bq/cm^2 (10^{-5} μCi/cm^2)	for all other alpha emitters

9.3.2.4 สิ่งของในชั้น 8 หรือสิ่งของที่มีคุณสมบัติคล้ายคลึงกัน

9.3.2.4.1 สินค้าเหล่านี้จะต้องเก็บไว้ในที่แห้งเท่าที่จะปฏิบัติได้อย่างสมเหตุสมผล

9.3.2.4.2 ก่อนที่จะขนถ่ายสินค้าเหล่านี้ขึ้นเรือ จะต้องให้ความสนใจกับการทำความสะอาดพื้นที่เก็บสินค้าที่จะใช้ โดยเฉพาะอย่างยิ่งเพื่อให้แน่ใจว่าพื้นที่เหล่านี้แห้ง

9.3.2.4.3 จะต้องป้องกันการแทรกซึมของสิ่งของเหล่านี้ไปยังพื้นที่เก็บสินค้า ท้องเรือ หลุมน้ำที่คงค้าง และระหว่างแผงเพดาน

9.3.2.4.4 ต้องให้ความสนใจเป็นพิเศษในการทำความสะอาดพื้นที่เก็บสินค้า ภายหลังการขนถ่ายสินค้าออกจากเรือ เนื่องจากเศษสินค้าที่ตกค้างเหล่านี้อาจกัดกร่อนโครงสร้างของเรืออย่างมาก ให้พิจารณาทำความสะอาดพื้นที่เก็บสินค้าและตามด้วยการทำให้แห้งอย่างรอบคอบ

9.3.3 การจัดแยกระหว่างสิ่งของเทกองแห้งที่มีอันตรายจากสารเคมีและสินค้าอันตรายในรูปแบบบรรจุหีบห่อ

9.3.3.1 เว้นแต่จะกำหนดไว้เป็นอย่างอื่นในส่วนนี้หรือในตารางเฉพาะราย การจัดแยกระหว่างสินค้าเทกองที่เป็นของแข็งในระวางกลุ่ม บี และสินค้าอันตรายในรูปแบบบรรจุหีบห่อ จะต้องเป็นไปตามตารางต่อไปนี้

9.3.3.2 จะต้องพิจารณารายการสินค้าอันตรายของประมวลข้อบังคับระหว่างประเทศว่าด้วยความปลอดภัยในการขนส่งสินค้าอันตรายทางน้ำ (IMDG Code) เพื่อหาข้อกำหนดเพิ่มเติมเกี่ยวกับการจัดเก็บและการจัดแยกสินค้าอันตรายในรูปแบบบรรจุหีบห่อ

	Dangerous goods in packaged form																
Bulk cargo (classified as dangerous goods)	Class/ Division	1.1 1.2 1.5	1.3	1.4	2.1	2.2 2.3	3	4.1	4.2	4.3	5.1	5.2	6.1	6.2	7	8	9
Flammable solids	4.1	4	3	2	2	2	2	X	1	X	1	2	X	3	2	1	X
Substances liable to spontaneous combustion	4.2	4	3	2	2	2	2	1	X	1	2	2	1	3	2	1	X
Substances which, in contact with water, emit flammable gases	4.3	4	4	2	2	X	2	X	1	X	2	2	X	2	2	1	X
Oxidizing substances (agents)	5.1	4	4	2	2	X	2	1	2	2	X	2	1	3	1	2	X
Toxic substances	6.1	2	2	X	X	X	X	X	1	X	1	1	X	1	X	X	X
Radioactive materials	7	2	2	2	2	2	2	2	2	2	1	2	X	3	X	2	X
Corrosive substances	8	4	2	2	1	X	1	1	1	1	2	2	X	3	2	X	X
Miscellaneous dangerous substances and articles	9	X	X	X	X	X	X	X	X	X	X	X	X	X	X	X	X
Materials hazardous only in bulk (MHB)	MHB	X	X	X	X	X	X	X	X	X	X	X	X	3	X	X	X

ตัวเลขจะเกี่ยวข้องกับคำศัพท์ในการจัดแยก ดังต่อไปนี้

1 “ห่างออกจาก”

จัดแยกอย่างมีประสิทธิภาพ เพื่อให้สิ่งของที่เข้ากันไม่ได้ไม่สามารถมีปฏิกิริยาอันตรายต่อกันในกรณีเกิดอุบัติเหตุ แต่อาจบรรทุกในระวางสินค้าหรือห้องกั้นหรือบนดาดฟ้าเดียวกัน โดยให้จัดแยกในแนวราบอย่างต่ำ 3 เมตร เมื่อมองในแนวดิ่ง

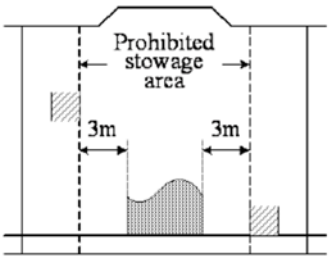

2 “แยกออกจาก”

ในระวางสินค้าที่ต่างกันเมื่อจัดเก็บใต้ดาดฟ้า การจัดแยกในแนวตั้ง กล่าวคือ ในห้องกั้นที่ต่างกันอาจยอมรับได้ว่าเทียบเท่ากับการจัดแยกนี้ ถ้าดาดฟ้าที่คั่นอยู่ทนต่อไฟและของเหลว

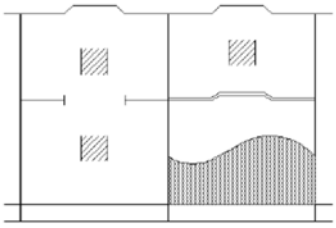

3 “แยกออกโดยห้องกั้นหรือระวางสินค้าจาก”

หมายถึงการจัดแยกในแนวตั้งหรือแนวราบ หากดาดฟ้าไม่ทนต่อไฟและของเหลว เฉพาะการจัดแยกตามแนวยาว กล่าวคือ โดยการคั่นห้องกั้นเท่านั้น ที่ยอมรับได้

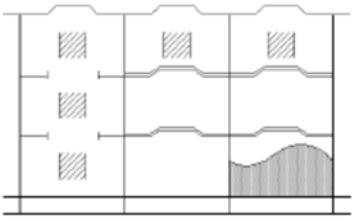

4 “แยกตามแนวยาวออกโดยคั่นห้องกั้นหรือระวางสินค้าจาก”

การจัดแยกในแนวตั้งอย่างเดียวไม่เป็นไปตามข้อกำหนดนี้

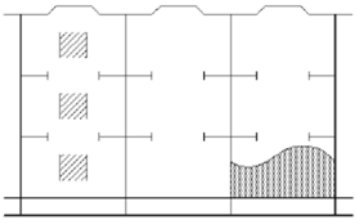

X การจัดแยกปรากฏอยู่ในรายการสินค้าอันตรายของ IMDG Code หรือตารางเฉพาะรายในประมวลข้อบังคับนี้ (ถ้ามี)

คำอธิบายภาพ

สิ่งของเทกองแห้งที่อ้างอิง

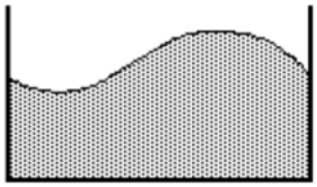

หีบห่อที่บรรจุสินค้าที่เข้ากันไม่ได้

ดาดฟ้าที่ทนต่อไฟและของเหลว

หมายเหตุ : เส้นแนวตั้งแสดงถึงฝากั้นผนึกน้ำแนวขวางระหว่างพื้นที่เก็บสินค้า

9.3.4 การจัดแยกระหว่างสินค้าเทกองที่เป็นของแข็งในระวางที่มีอันตรายจากสารเคมี

เว้นแต่จะกำหนดไว้เป็นอย่างอื่นในส่วนนี้หรือในตารางเฉพาะรายของสินค้ากลุ่ม บี การจัดแยกระหว่างสินค้าเทกองที่เป็นของแข็งในระวางที่มีอันตรายจากสารเคมี จะต้องเป็นไปตามตารางต่อไปนี้

Solid bulk materials										
	Class/ Division	4.1	4.2	4.3	5.1	6.1	7	8	9	MHB
Flammable solids	4.1	X								
Substances liable to spontaneous combustion	4.2	2	X							
Substances which, in contact with water, emit flammable gases	4.3	3	3	X						
Oxidizing substances	5.1	3	3	3	X					
Toxic substances	6.1	X	X	X	2	X				
Radioactive materials	7	2	2	2	2	2	X			
Corrosive substances	8	2	2	2	2	X	2	X		
Miscellaneous dangerous substances and articles	9	X	X	X	X	X	2	X	X	
Materials hazardous only in bulk (MHB)	MHB	X	X	X	X	X	2	X	X	X

ตัวเลขจะเกี่ยวข้องกับคำศัพท์ในการจัดแยก ดังต่อไปนี้

2 “แยกออกจาก”

ในระวางสินค้าที่ต่างกันเมื่อจัดเก็บใต้ดาดฟ้า การจัดแยกในแนวตั้ง กล่าวคือ ในห้องกั้นที่ต่างกันอาจยอมรับได้ว่าเทียบเท่ากับการจัดแยกนี้ ถ้าดาดฟ้าที่คั่นอยู่ทนต่อไฟและของเหลว

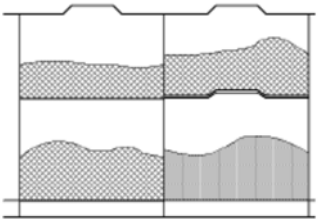

3 “แยกออกโดยห้องกั้นหรือระวางสินค้าจาก”

หมายถึงการจัดแยกในแนวตั้งหรือแนวราบ หากดาดฟ้าไม่ทนต่อไฟและของเหลว เฉพาะการจัดแยกตามแนวยาว กล่าวคือ โดยการคั่นห้องกั้นเท่านั้น ที่ยอมรับได้

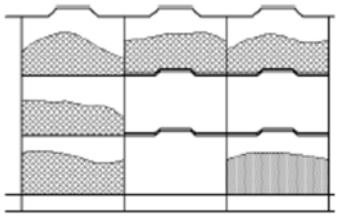

X การจัดแยกปรากฏอยู่ในตารางเฉพาะรายในประมวลข้อบังคับนี้ (ถ้ามี)

คำอธิบายภาพ

สิ่งของเทกองแห้งที่อ้างอิง

สิ่งของเทกองแห้งที่เข้ากันไม่ได้

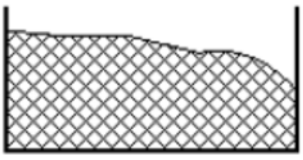

ดาดฟ้าที่ทนต่อไฟและของเหลว

หมายเหตุ : เส้นแนวตั้งแสดงถึงฝากั้นผนึกน้ำแนวขวางระหว่างพื้นที่เก็บสินค้า

ส่วนที่ 10

การขนส่งของเสียที่เป็นของแข็งในระวาง

10.1 คำนำ

10.1.1 การเคลื่อนย้ายข้ามแดนของของเสียเป็นภัยคุกคามต่อสุขภาพของมนุษย์และต่อสิ่งแวดล้อม

10.1.2 ของเสียจะต้องขนส่งตามคำแนะนำและอนุสัญญาระหว่างประเทศที่เกี่ยวข้อง และเฉพาะอย่างยิ่งโดยบทบัญญัติของประมวลข้อบังคับนี้ในกรณีที่เกี่ยวข้องกับการขนส่งในระวางทางทะเล

10.2 คำนิยาม

10.2.1 *ของเสีย* สำหรับจุดประสงค์ของส่วนนี้ หมายถึง สินค้าเทกองที่เป็นของแข็งในระวางที่มีหรือปนเปื้อนส่วนประกอบหนึ่งรายการหรือมากกว่านั้นซึ่งอยู่ภายใต้บทบัญญัติของประมวลข้อบังคับนี้ที่ใช้กับสินค้าในชั้น 4.1, 4.2, 4.3, 5.1, 6.1, 8 หรือ 9 ซึ่งไม่มีการใช้งานโดยตรง แต่จะถูกขนส่งเพื่อไปทิ้งเท เผา หรือการกำจัดโดยวิธีอื่น ๆ

10.2.2 *การเคลื่อนย้ายข้ามแดนของของเสีย* หมายถึง การขนส่งของของเสียจากพื้นที่ภายในเขตอำนาจของประเทศหนึ่งไปยัง หรือผ่านพื้นที่ภายใต้เขตอำนาจของประเทศหนึ่ง หรือไปยังหรือผ่านพื้นที่ที่มิได้อยู่ภายใต้เขตอำนาจของประเทศใด โดยมีประเทศที่เกี่ยวข้องในการเคลื่อนย้ายอย่างน้อย 2 ประเทศ

10.3 การใช้บังคับ

10.3.1 บทบัญญัติของส่วนนี้ใช้บังคับกับการขนส่งของเสียในระวางโดยเรือ และต้องพิจารณาร่วมกับบทบัญญัติอื่นๆ ทั้งหมดของประมวลข้อบังคับนี้

10.3.2 สินค้าแห้งที่มีหรือปนเปื้อนด้วยวัสดุกัมมันตรังสีจะต้องอยู่ภายใต้บทบัญญัติที่ใช้บังคับกับการขนส่งวัสดุกัมมันตรังสี และไม่ถือว่าเป็น “ของเสีย” ตามจุดประสงค์ของส่วนนี้

10.4 การเคลื่อนย้ายข้ามแดนภายใต้อนุสัญญาบาเซล (อ้างอิงถึง Basel Convention on the Control of Transboundary Movements of Hazardous Wastes and their Disposal (1989))

การเคลื่อนย้ายข้ามแดนของของเสียจะได้รับอนุญาตให้เริ่มได้ก็ต่อเมื่อ

.1 การแจ้งถูกส่งโดยหน่วยงานที่มีอำนาจของประเทศต้นทาง หรือโดยผู้ก่อกำเนิดหรือผู้ส่งออกผ่านช่องทางของหน่วยงานที่มีอำนาจของประเทศต้นทางไปยังประเทศปลายทาง และ

.2 หน่วยงานที่มีอำนาจของประเทศต้นทางซึ่งอนุญาตให้เคลื่อนย้ายได้รับความยินยอมเป็นลายลักษณ์อักษรจากประเทศปลายทางระบุว่าของเสียจะถูกเผาหรือกำจัดด้วยวิธีการอื่นๆ อย่างปลอดภัย

10.5 เอกสาร

นอกเหนือจากเอกสารที่จำเป็นสำหรับการขนส่งสินค้าเทกองที่เป็นของแข็งในระวาง การเคลื่อนย้ายข้ามแดนของของเสียทั้งหมด จะต้องมาพร้อมกับเอกสารการเคลื่อนย้ายของเสียจากจุดที่การเคลื่อนย้ายข้ามแดนเริ่มต้นจนถึงจุดของการกำจัด เอกสารนี้จะต้องจัดให้มีไว้ตลอดเวลาสำหรับหน่วยงานที่มีอำนาจ และแก่ทุกคนที่เกี่ยวข้องในการจัดการการขนส่งของเสีย

10.6 การแบ่งชั้นของของเสีย

10.6.1 ของเสียที่มีส่วนประกอบเพียงอย่างเดียว ซึ่งเป็นสินค้าที่อยู่ภายใต้บทบัญญัติแห่งประมวลข้อบังคับนี้ที่ใช้กับสินค้าในชั้น 4.1, 4.2, 4.3, 5.1, 5.1, 6.1, 8 หรือ 9 จะถือว่าเป็นสินค้าเฉพาะรายนั้น หากความเข้มข้นของส่วนประกอบของของเสียยังคงแสดงอันตรายที่มีอยู่ในส่วนประกอบเอง ของเสียจะถูกแบ่งชั้นเป็นชั้นที่ใช้กับส่วนประกอบนั้น

10.6.2 ของเสียที่มีส่วนประกอบสองรายการหรือมากกว่านั้น ซึ่งเป็นสินค้าที่อยู่ภายใต้บทบัญญัติของประมวลข้อบังคับนี้ที่ใช้กับสินค้าในชั้น 4.1, 4.2, 4.3, 5.1, 6.1, 8, หรือ 9 ต้องถูกแบ่งชั้นภายใต้ชั้นที่เหมาะสมตามลักษณะและคุณสมบัติที่เป็นอันตรายตามที่อธิบายไว้ใน 10.6.3 และ 10.6.4

10.6.3 การแบ่งชั้นตามลักษณะและคุณสมบัติที่เป็นอันตรายจะต้องดำเนินการดังต่อไปนี้

.1 การกำหนดลักษณะทางกายภาพและทางเคมีและคุณสมบัติทางสรีรวิทยาโดยการวัดหรือการคำนวณตามด้วยการแบ่งชั้นตามเกณฑ์ที่ใช้บังคับกับส่วนประกอบนั้น หรือ

.2 ถ้าการกำหนดไม่สามารถทำได้ ของเสียจะต้องถูกแบ่งชั้นตามส่วนประกอบที่แสดงถึงอันตรายที่เด่นชัด

10.6.4 ในการกำหนดความเป็นอันตรายที่เด่นชัด จะต้องนำเกณฑ์ดังต่อไปนี้มาพิจารณา

.1 หากส่วนประกอบหนึ่งรายการหรือมากกว่านั้นจัดอยู่ในชั้นใดชั้นหนึ่ง และของเสียแสดงอันตรายที่มีอยู่ในส่วนประกอบเหล่านี้ ของเสียจะรวมอยู่ในชั้นนั้น หรือ

.2 หากมีส่วนประกอบตกอยู่ภายใต้ชั้นสองชั้นหรือมากกว่านั้น การแบ่งชั้นของของเสียจะต้องคำนึงถึงลำดับความสำคัญที่ใช้กับสินค้าที่มีอันตรายหลายอย่างที่กำหนดไว้ใน IMDG Code

10.7 การจัดเก็บและการจัดการของเสีย

ของเสียต้องถูกจัดเก็บและจัดการตามบทบัญญัติของส่วนที่ 1 ถึง 9 ของประมวลข้อบังคับนี้ และด้วยบทบัญญัติเพิ่มเติมใดๆ ที่รวมอยู่ในตารางเฉพาะรายของสินค้ากลุ่ม บี ที่ใช้กับส่วนประกอบที่แสดงอันตรายนั้น

10.8 การจัดแยก

ของเสียต้องถูกจัดแยกตามบทบัญญัติใน 9.3.3 และ 9.3.4 ตามความเหมาะสม

10.9 ขั้นตอนในกรณีเกิดอุบัติเหตุ

ในกรณีที่ระหว่างการขนส่งและของเสียจะก่อให้เกิดอันตรายต่อเรือที่บรรทุกหรือสิ่งแวดล้อม นายเรือจะต้องแจ้งหน่วยงานที่อำนาจของประเทศต้นทางและปลายทางทันที และรับคำแนะนำเกี่ยวกับสิ่งที่ต้องดำเนินการ

ส่วนที่ 11

บทบัญญัติด้านการรักษาความปลอดภัย

บทนำ

บทบัญญัติในส่วนนี้ระบุถึงการรักษาความปลอดภัยของสินค้าเทกองที่เป็นของแข็งในระวางที่ขนส่งทางทะเล ให้พึงระลึกไว้เสมอว่าสารบางชนิดที่ขนส่งในรูปแบบของสินค้าเทกองไม่ว่าจะโดยลักษณะที่แท้จริงตามธรรมชาติ หรือเมื่อจัดส่งร่วมกับสารอื่นๆ อาจใช้เป็นส่วนประกอบหรือเพิ่มประสิทธิภาพของอาวุธที่ใช้ในการกระทำที่ผิดกฎหมาย (ให้พึงระลึกไว้เสมอด้วยว่าเรือที่ใช้ในการบรรทุกสินค้าเทกองที่เป็นของแข็งในระวางอาจถูกนำมาใช้เป็นพาหนะในการขนส่งอาวุธ ที่ไม่ได้รับอนุญาต อุปกรณ์ก่อความไม่สงบหรือวัตถุระเบิดโดยไม่คำนึงถึงลักษณะของสินค้าที่บรรทุก) กรมเจ้าท่าอาจบังคับใช้บทบัญญัติในการรักษาความปลอดภัยเพิ่มเติม ซึ่งควรพิจารณาเมื่อมีการเสนอหรือขนส่งสินค้าเทกองที่เป็นของแข็งในระวาง บทบัญญัติของส่วนนี้ยังคงเป็นคำแนะนำยกเว้น 11.1.1

11.1 บทบัญญัติทั่วไปสำหรับบริษัท เรือ และท่าเรือ

11.1.1 บทบัญญัติที่เกี่ยวข้องของอนุสัญญา SOLAS บทที่ XI-2 และที่แก้ไขเพิ่มเติม และภาค ก ของประมวลข้อบังคับว่าด้วยการรักษาความปลอดภัยของเรือและท่าเรือระหว่างประเทศ (ISPS Code) จะใช้บังคับกับบริษัท เรือ และท่าเรือที่จัดการและขนส่งสินค้าเทกองที่เป็นของแข็งในระวาง และซึ่งอนุสัญญา SOLAS 74 บทที่ XI-2 และที่ แก้ไขเพิ่มเติมใช้บังคับ โดยคำนึงถึงคำแนะนำที่ให้ไว้ในภาค ข ของ ISPS Code

11.1.2 ควรพิจารณาถึงบทบัญญัติที่เกี่ยวข้องกับการรักษาความปลอดภัยของ ILO/IMO Code of practice on security in ports และ IMDG Code ตามความเหมาะสม

11.1.3 บุคลากรของบริษัทที่อยู่บนฝั่ง บุคลากรที่ทำงานบนเรือ และบุคลากรของท่าเรือใดที่มีส่วนร่วมในการจัดการและขนส่งสินค้าเทกองที่เป็นของแข็งในระวางควรตระหนักถึงข้อกำหนดด้านการรักษาความปลอดภัยสำหรับสินค้า นอกเหนือจากที่ระบุไว้ใน ISPS Code และสอดคล้องกับความรับผิดชอบของพวกเขา

11.1.4 การฝึกอบรมเจ้าหน้าที่รักษาความปลอดภัยประจำบริษัท บุคลากรของบริษัทที่อยู่บนฝั่งที่มีหน้าที่ในการรักษาความปลอดภัย เจ้าหน้าที่รักษาความปลอดภัยประจำท่าเรือ และบุคลากรของท่าเรือที่มีหน้าที่ในการรักษาความปลอดภัยที่มีส่วนร่วมในการจัดการและขนส่งสินค้าเทกองที่เป็นของแข็งในระวาง ควรมีองค์ประกอบในเรื่องของการตระหนักรู้ถึงการรักษาความปลอดภัยที่เกี่ยวข้องกับลักษณะของสินค้าเหล่านั้น ตัวอย่างเช่น ในกรณีที่สินค้าดังกล่าวสิ่งของที่เป็นอันตรายเฉพาะเมื่อบรรทุกในระวาง (MHB)

11.1.5 คนประจำเรือและบุคลากรของท่าเรือทุกคนที่ไม่ได้กล่าวถึงใน 11.1.4 และมีส่วนร่วมในการขนส่งสินค้าเทกองที่เป็นของแข็งในระวางควรคุ้นเคยกับบทบัญญัติของแผนการรักษาความปลอดภัยที่เกี่ยวข้องกับสินค้าเหล่านั้นซึ่งสอดคล้องกับความรับผิดชอบของพวกเขา

11.2 บทบัญญัติทั่วไปสำหรับบุคลากรที่อยู่บนฝั่ง

11.2.1 เพื่อจุดประสงค์ของส่วนย่อยนี้ บุคลากรที่อยู่บนฝั่งจะครอบคลุมบุคคลเช่นผู้ที่

- เตรียมเอกสารสำหรับการขนส่งสินค้าเทกอง
- เสนอสินค้าเทกองสำหรับการขนส่ง

- รับสินค้าเทกองเพื่อการขนส่ง
- จัดการสินค้าเทกอง
- จัดเตรียมแผนการขนถ่ายสินค้า/บรรทุกสินค้าเทกอง
- ขนถ่ายสินค้าเทกองขึ้นเรือ/ออกจากเรือ และ
- บังคับใช้ หรือสำรวจ หรือตรวจสอบการปฏิบัติตามกฎและข้อบังคับที่ใช้บังคับ หรือ
- เป็นบุคคลอื่นที่มีส่วนเกี่ยวข้องในการจัดการและขนส่งสินค้าเทกองตามที่กรมเจ้าท่ากำหนด

อย่างไรก็ตาม บทบัญญัติของ 11.2 ไม่ใช้บังคับกับ

- เจ้าหน้าที่รักษาความปลอดภัยประจำบริษัทและบุคลากรที่อยู่บนฝั่งที่กล่าวถึงในภาค ก ส่วนที่ 13.1 ของ ISPS Code
- เจ้าหน้าที่รักษาความปลอดภัยประจำเรือและคนประจำเรือที่กล่าวถึงในภาค ก ส่วนที่ 13.2 และ 13.3 ของ ISPS Code
- เจ้าหน้าที่รักษาความปลอดภัยประจำท่าเรือ เจ้าหน้าที่ที่ปฏิบัติหน้าที่รักษาความปลอดภัย และเจ้าหน้าที่ของท่าเรือที่มีหน้าที่รักษาความปลอดภัยโดยเฉพาะที่กล่าวถึงในภาค ก ส่วนที่ 18.1 และ 18.2 ของ ISPS Code

สำหรับการฝึกอบรมเจ้าหน้าที่และบุคลากรข้างต้นให้อ้างอิงกับ ISPS Code

11.2.2 บุคลากรที่อยู่บนฝั่งที่มีส่วนร่วมในการขนส่งสินค้าเทกองที่เป็นของแข็งในระวางทางทะเล ควรพิจารณาบทบัญญัติของ การรักษาความปลอดภัยในการขนส่งสินค้าเทกองที่เป็นของแข็งในระวางที่สอดคล้องกับความรับผิดชอบของพวกเขา

11.2.3 การฝึกอบรมด้านการรักษาความปลอดภัย

11.2.3.1 การฝึกอบรมบุคลากรที่อยู่บนฝั่งควรรวมถึงองค์ประกอบในเรื่องของการตระหนักรู้ถึงการรักษาความปลอดภัย ความจำเป็นในการควบคุมการเข้าถึงสินค้าและเรือ และคำแนะนำทั่วไปเกี่ยวกับประเภทของสินค้าเทกองที่มีความสำคัญด้านการรักษาความปลอดภัย

11.2.3.2 การฝึกอบรมในเรื่องของการตระหนักรู้ถึงการรักษาความปลอดภัยควรระบุถึงลักษณะของความเสี่ยงต่อความปลอดภัย การรับรู้ความเสี่ยงต่อความปลอดภัย วิธีการแก้ไขและลดความเสี่ยง และสิ่งที่จะต้องดำเนินการในกรณีที่เกิดการฝ่าฝืนการรักษาความปลอดภัย การฝึกอบรมควรรวมถึงการตระหนักรู้ถึงแผนการรักษาความปลอดภัย (ถ้าเหมาะสม อ้างอิงถึง 11.3) สอดคล้องกับความรับผิดชอบรวมถึงการดำเนินการตามแผนการรักษาความปลอดภัยของแต่ละบุคคล

11.2.3.3 การฝึกอบรมดังกล่าวควรจัดให้มีหรือตรวจสอบเมื่อมีการจ้างงานในตำแหน่งที่เกี่ยวข้องกับการขนส่งสินค้าเทกองทางทะเล และควรเสริมด้วยการอบรมทบทวนเป็นระยะๆ

11.2.3.4 บันทึกของการฝึกอบรมด้านการรักษาความปลอดภัยทั้งหมดควรถูกเก็บไว้โดยนายจ้างและเปิดเผยต่อลูกจ้างหากมีการร้องขอ

11.3 บทบัญญัติสำหรับสินค้าเทกองที่เป็นของแข็งในระวางที่มีผลกระทบสูง

11.3.1 เพื่อจุดประสงค์ของส่วนย่อยนี้ สินค้าเทกองที่เป็นของแข็งในระวางที่มีผลกระทบสูงซึ่งมีความเป็นไปได้สูงที่จะกระทบต่อการรักษาความปลอดภัย คือสินค้าที่มีความเป็นไปได้ที่จะถูกนำไปใช้ในทางที่ผิดในการกระทำที่ผิดกฎหมาย และซึ่งอาจส่งผลให้เกิดผลกระทบร้ายแรง เช่น การสูญเสียชีวิตเป็นจำนวนมากหรือการทำลายล้างสูง ตัวอย่างเช่น class 5.1 ammonium nitrate UN 1942 และ ammonium nitrate based fertilizers UN 2067

11.3.2 บทบัญญัติของส่วนย่อยนี้ไม่ใช้บังคับกับเรือและท่าเรือ (ดู ISPS Code ในส่วนของแผนรักษาความปลอดภัยของเรือ และแผนรักษาความปลอดภัยของท่าเรือ)

11.3.3 ผู้ส่งและบุคคลอื่นๆ มีส่วนร่วมในการขนส่งสินค้าเทกองที่เป็นของแข็งในระวางซึ่งมีความเป็นไปได้สูงที่จะกระทบต่อการรักษาความปลอดภัยควรนำมาใช้ นำไปปฏิบัติ และปฏิบัติตามแผนการรักษาความปลอดภัยที่ระบุอย่างน้อยองค์ประกอบที่กำหนดไว้ใน 11.3.4

11.3.4 แผนการรักษาความปลอดภัยควรประกอบด้วยองค์ประกอบอย่างน้อยดังต่อไปนี้

.1 การจัดสรรความรับผิดชอบเฉพาะด้านเพื่อการรักษาความปลอดภัยให้แก่บุคคลที่มีความสามารถและมีคุณสมบัติมี เพื่อให้มีอำนาจที่เหมาะสมในการดำเนินการตามหน้าที่

.2 บันทึกของสินค้าเทกองที่เป็นของแข็งในระวางซึ่งมีความเป็นไปได้สูงที่จะกระทบต่อการรักษาความปลอดภัยหรือประเภทของสินค้าเทกองที่เป็นของแข็งในระวางซึ่งมีความเป็นไปได้สูงที่จะกระทบต่อการรักษาความปลอดภัยที่มีการขนส่ง

.3 การทบทวนการปฏิบัติงานปัจจุบันและการประเมินจุดอ่อน รวมถึงการขนส่งต่อเนื่อง การจัดเก็บชั่วคราว การจัดการและการกระจายสินค้า ตามความเหมาะสม

.4 แถลงการณ์ที่ชัดเจนเกี่ยวกับมาตรการต่างๆ รวมถึงการฝึกอบรม นโยบาย (รวมถึงการตอบสนองต่อภัยคุกคามที่สูงขึ้น การตรวจสอบพนักงาน/การจ้างงานใหม่ ฯลฯ) แนวทางการปฏิบัติงาน (เช่นทางเลือก/การใช้เส้นทางที่เป็นที่รู้จัก การควบคุมการเข้าถึงเรือ พื้นที่เก็บและขนถ่ายสินค้าเทกอง ความใกล้กับโครงสร้างพื้นฐานที่เปราะบาง ฯลฯ) อุปกรณ์และทรัพยากรที่จะใช้เพื่อลดความเสี่ยง

.5 ขั้นตอนที่มีประสิทธิภาพและเป็นปัจจุบันสำหรับการรายงานและการจัดการกับภัยคุกคามด้านการรักษาความปลอดภัย การฝ่าฝืนการรักษาความปลอดภัย หรือเหตุการณ์ที่อาจส่งผลกระทบต่อความปลอดภัย

.6 ขั้นตอนการประเมินและทดสอบแผนการรักษาความปลอดภัย และขั้นตอนสำหรับการทบทวนและปรับปรุงแผนเป็นระยะๆ

.7 มาตรการเพื่อให้เกิดความมั่นใจในการรักษาความปลอดภัยของข้อมูลการขนส่งที่มีอยู่ในแผน และ

.8 มาตรการเพื่อให้เกิดความมั่นใจว่าได้มีการจำกัดการกระจายข้อมูลการขนส่งเท่าที่จะทำได้

ส่วนที่ 12

ตารางการแปลงค่า Stowage factor

12.1 Cubic metres per metric tonne to cubic feet per long ton (2,240 lb, 1,016 kg)

Factor: 1 m^3/t = 35.87 ft^3/ton (rounded to the nearest hundredth of a ft^3/ton)

m^3/t	0.00	0.01	0.02	0.03	0.04	0.05	0.06	0.07	0.08	0.09
0.0	-	0.36	0.72	1.08	1.43	1.79	2.15	2.51	2.87	3.23
0.1	3.59	3.95	4.30	4.66	5.02	5.38	5.74	6.10	6.46	6.82
0.2	7.17	7.53	7.89	8.25	8.61	8.97	9.33	9.68	10.04	10.40
0.3	10.76	11.12	11.48	11.84	12.20	12.55	12.91	13.27	13.63	13.99
0.4	14.35	14.71	15.07	15.42	15.78	16.14	16.50	16.86	17.22	17.58
0.5	17.94	18.29	18.65	19.01	19.37	19.73	20.09	20.45	20.80	21.16
0.6	21.52	21.88	22.24	22.60	22.96	23.32	23.67	24.03	24.39	24.75
0.7	25.11	25.47	25.83	26.19	26.54	26.90	27.26	27.62	27.98	28.34
0.8	28.70	29.05	29.41	29.77	30.13	30.49	30.85	31.21	31.57	31.92
0.9	32.28	32.64	33.00	33.36	33.72	34.08	34.44	34.79	35.15	35.51
1.0	35.87	36.23	36.59	36.95	37.31	37.66	38.02	38.38	38.74	39.10
1.1	39.46	39.82	40.17	40.53	40.89	41.25	41.61	41.97	42.33	42.69
1.2	43.04	43.40	43.76	44.12	44.48	44.84	45.20	45.56	45.91	46.27
1.3	46.63	46.90	47.35	47.71	48.07	48.43	48.78	49.14	49.50	49.86
1.4	50.22	50.58	50.94	51.29	51.65	52.01	52.37	52.73	53.09	53.45
1.5	53.81	54.16	54.52	54.88	55.24	55.60	55.96	56.32	56.67	57.03
1.6	57.39	57.75	58.11	58.47	58.83	59.19	59.54	59.90	60.26	60.62

ft^3/ton

12.2 Cubic feet per long ton (ft3/ton) (2,240 lb, 1,016 kg) to cubic metres per metric tonne (m3/t) (2,204 lb, 1,000 kg)

Factor: 1 ft^3/ton = 0.02788 m^3/t (rounded to the nearest ten thousandth of a m^3/t)

ft^3/ton	0	1	2	3	4	5	6	7	8	9
0	-	0.0279	0.0558	0.0836	0.1115	0.1394	0.1676	0.1952	0.2230	0.2509
10	0.2788	0.3067	0.3346	0.3624	0.3903	0.4182	0.4461	0.4740	0.5018	0.5297
20	0.5576	0.5855	0.6134	0.6412	0.6691	0.6970	0.7249	0.7528	0.7806	0.8085
30	0.8364	0.8643	0.8922	0.9200	0.9479	0.9758	1.0037	1.0316	1.0594	1.0873
40	1.1152	1.1431	1.1710	1.1988	1.2267	1.2546	1.2825	1.3104	1.3382	1.3661
50	1.3940	1.4219	1.4498	1.4776	1.5055	1.5334	1.5613	1.5892	1.6170	1.6449
60	1.6728	1.7007	1.7286	1.7564	1.7843	1.8122	1.8401	1.8680	1.8958	1.9237
70	1.9516	1.9795	2.0074	2.0352	2.0631	2.0910	2.1189	2.1468	2.1746	2.2025
80	2.2304	2.2583	2.2862	2.3140	2.3419	2.3698	2.3977	2.4256	2.4534	2.4818
90	2.5092	2.5371	2.5650	2.5928	2.6207	2.6486	2.6765	2.7044	2.7322	2.7601
100	2.7880	2.8159	2.8438	2.8716	2.8995	2.9274	2.9553	2.9832	3.0110	3.0389

m^3/t

ส่วนที่ 13

การอ้างอิงถึงข้อมูลและคำแนะนำที่เกี่ยวข้อง

13.1 บททั่วไป

ส่วนนี้แสดงรายการอ้างอิงถึงตราสาร IMO และมาตรฐานสากลอื่นๆ (เช่น ISO, IEC) ที่เกี่ยวข้องกับข้อกำหนดในประมวลข้อบังคับนี้ (ควรสังเกตว่ารายการนี้อาจไม่ครบถ้วนสมบูรณ์)

13.2 รายการอ้างอิง

การอ้างอิงถึงของส่วนย่อยในประมวลข้อบังคับนี้ การอ้างอิงถึงตราสาร IMO ที่เกี่ยวข้อง หรือมาตรฐานและหัวข้ออยู่ในตารางต่อไปนี้ แถวที่ 1 มีการอ้างอิงไปยังหมายเลขของส่วนย่อยในประมวลข้อบังคับนี้ แถวที่ 2 มีการอ้างอิงตราสาร IMO ที่เกี่ยวข้องหรือมาตรฐานที่อ้างอิง แถวที่ 3 ระบุหัวข้อที่เกี่ยวข้อง

Reference to subsections in this Code (1)	Reference to the relevant IMO instruments or standard (2)	Subject (3)

13.2.1 สินค้าอันตรายและการแบ่งชั้น

9.2	IMDG Code (SOLAS VII/1.1) SOLAS VII/1.2	Classification of dangerous goods

13.2.2 ความทรงตัว

2.1.3	SOLAS II-1/5-1	Stability information
2.1.3	SOLAS VI/6.1	Stability information
2.1.3	SOLAS VI/7.2.1	Stability information
2.1.3	SOLAS VI/7.4	Loading and trimming of bulk cargoes
2.1.3	SOLAS XII/8	Stability information

13.2.3 การจัดการระบบดับไฟ

General Group B	SOLAS II-2/10.7	Fire-extinguishing arrangements in cargo spaces
General Group B	FSS Code, chapter 5	Fixed Gas Fire-Extinguishing Systems
General	FSS Code, chapter 9	Fixed fire detection and fire alarm systems
General	FSS Code, chapter 10	Sample extraction smoke detection systems
Group B	SOLAS II-2/19	Special requirements for ships carrying dangerous goods
Group A, B and C	MSC.1/Circ.1395/Rev.4	List of solid bulk cargoes for which a fixed gas fire-extinguishing system may be exempted or for which a fixed gas fire-extinguishing system is ineffective

13.2.4 การระบายอากาศ

General Group B	International Convention on Load Lines 1966, Annex I, regulation 19	Ventilation openings
General Group B	SOLAS II-2/9.7	Ventilation systems
General Group B	SOLAS II-2/19.3.4	Ventilation for ships carrying dangerous goods
General Group B	MSC.1/Circ.1434	Unified Interpretation of SOLAS II-2/19.3.4
General Group B	MSC.1/Circ.1120	Unified Interpretation of SOLAS including II-2/19.3.2, 19.3.4 and 19.3.4.2
General Group B	IEC 60092-506	Electrical standards for equipment safe for use in an explosive atmosphere

13.2.5 การป้องกันตัวบุคคล

General Group B	IMO/WHO/ILO *Medical First Aid Guide for Use in Accidents Involving Dangerous Goods* (MFAG)	First aid measures
General Group B	SOLAS II-2/10.10 and FSS Code, chapter 3	Fire-fighter's outfits
General Group B	SOLAS II-2/19.3.6.1 and FSS Code, chapter 3	Protective clothing
General Group B	SOLAS II-2/19.3.6.2 and FSS Code, chapter 3	Self-contained breathing apparatus

13.2.6 การตรวจจับก๊าซ

General	SOLAS VI/3	Oxygen analysis and gas detection equipment
General	Recommendations on the safe use of pesticides in ships applicable to the fumigation of cargo holds (MSC.1/Circ.1264), as amended by MSC.1/Circ.1396	Gas detection equipment for fumigation
General	IEC 60092-506	Electrical standards for equipment safe for use in an explosive atmosphere

13.2.7 ข้อมูล/เอกสารขั้นต่ำ

4.8.3	SOLAS II-2/19.4	Document of compliance for carriage of dangerous goods
4.2	SOLAS VI/2	Cargo information
4.2	SOLAS XII/8 SOLAS XII/10	Cargo restrictions and other information Density of bulk cargoes
4.2	SOLAS VI/7.2	Stability and other information on ships
4.2	SOLAS VII/7-2	Documentation for solid bulk dangerous goods
4.2	MARPOL Annex V, regulation 4.3	Discharge of garbage outside special areas
4.2	MARPOL Annex V, regulation 6.1.2.2	Discharge of garbage within special areas
4.2	MARPOL Annex V, appendix 1	Cargo information

13.2.8 การแยกขอบเขตของพื้นที่ห้องเครื่อง

Group B	SOLAS II-2/3.2, 3.4, 3.10	Definitions of "A", "B" and "C" class divisions
Group B	SOLAS II-2/9.2	Fire integrity of bulkheads and decks
Group B	SOLAS II-2/19.3.8	Insulation requirement ("A-60")

13.2.9 การรมควัน

3.6	Recommendations on the safe use of pesticides in ships applicable to the fumigation of cargo holds (MSC.1/Circ.1264), as amended by MSC.1/Circ.1396), section 3	Fumigation, application of fumigation, fumigants, safety precautions
3.6	SOLAS VI/4	Use of pesticides in ships

13.2.10 การจัดแยก

9.3	SOLAS VII/7-3	Stowage and segregation requirement
Group B	IEC 60092-352	Standards for electrical cable penetrations in boundaries

13.2.11 การขนส่งของเสียที่เป็นของแข็งในระวาง

10.4	Basel Convention on the Control of Transboundary Movements of Hazardous Wastes and their Disposal (1989)	Permitted transboundary movement of wastes
10.6	IMDG Code, subsection 2.0.5.4	Classification of wastes

13.2.12 การเข้าไปในพื้นที่ปิด

3.2.4	Resolution A.1050(27), 30 November 2011	Revised recommendations for entering enclosed spaces aboard ships

13.2.13 การหลีกเลี่ยงการรับแรงที่มากเกินไป

2.1.2	SOLAS XII/5 and 6	Structural strength of bulk carriers and structural and other requirements for bulk carriers
2.1.2	SOLAS XII/11	Loading instrument
2.1.2	Resolution A.862(20), as amended	Code of Practice for the Safe Loading and Unloading of Bulk Carriers (BLU Code)
2.1.2	MSC.1/Circ.1357	Additional considerations for the safe loading of bulk carriers

APPENDIX 1

INDIVIDUAL SCHEDULES OF SOLID BULK CARGOES

ALFALFA

Description
Material derived from dried alfalfa grass. Shipped in the form of meal, pellets, etc.

Characteristics

Physical properties			
Size	**Angle of repose**	**Bulk density (kg/m^3)**	**Stowage factor (m^3/t)**
Fine Powder	Not applicable	508 to 719	1.39 to 1.97
Hazard classification			
Class	**Subsidiary hazard(s)**	**MHB**	**Group**
Not applicable	Not applicable	Not applicable	C

Hazard
No special hazards.
This cargo is non-combustible or has a low fire risk.

Stowage and segregation
No special requirements.

Hold cleanliness
No special requirements.

Weather precautions
This cargo shall be kept as dry as practicable. This cargo shall not be handled during precipitation. During handling of this cargo, all non-working hatches of the cargo spaces into which this cargo is loaded, or to be loaded, shall be closed.

Loading
Trim in accordance with the relevant provisions required under sections 4 and 5 of this Code. Prior to loading of this cargo, a certificate shall be provided by a competent authority or shipper stating that the material as shipped does not meet the requirements for seed cake. Shipments which do meet the oil and moisture criteria for SEED CAKE shall comply with the requirements for SEED CAKE (a) UN 1386, SEED CAKE (b) UN 1386 or SEED CAKE UN 2217.

Precautions
No special requirements.

Ventilation
No special requirements.

Carriage
No special requirements.

Discharge
No special requirements.

Clean-up
No special requirements.

ALUMINA

Description
Alumina is a fine, white odourless powder with little or no moisture. Insoluble in organic liquids. Moisture content: 0% to 5%. If wet, alumina is unpumpable. This cargo is insoluble in water.

Characteristics

Physical properties			
Size	**Angle of repose**	**Bulk density (kg/m^3)**	**Stowage factor (m^3/t)**
Fine powder	Not applicable	781 to 1,087	0.92 to 1.28
Hazard classification			
Class	**Subsidiary hazard(s)**	**MHB**	**Group**
Not applicable	Not applicable	Not applicable	C

Hazard
Alumina dust is very abrasive and penetrating. Irritating to eyes and mucous membranes. This cargo is non-combustible or has a low fire risk.

Stowage and segregation
No special requirements.

Hold cleanliness
No special requirements.

Weather precautions
This cargo shall be kept as dry as practicable. This cargo shall not be handled during precipitation. During handling of this cargo, all non-working hatches of the cargo spaces into which this cargo is loaded, or to be loaded, shall be closed.

Loading
Trim in accordance with the relevant provisions required under sections 4 and 5 of this Code.

Precautions
Bilge wells shall be clean, dry and covered as appropriate, to prevent ingress of the cargo. Appropriate precautions shall be taken to protect machinery and accommodation spaces from the dust of the cargo. Bilge wells of the cargo spaces shall be protected from ingress of the cargo. Due consideration shall be given to protect equipment from the dust of the cargo. Persons who may be exposed to the dust of the cargo shall wear goggles or other equivalent dust eye-protection and dust filter masks. Those persons shall wear protective clothing, as necessary.

Ventilation
No special requirements.

Carriage
No special requirements.

Discharge
No special requirements.

Clean-up
The water used for the cleaning of the cargo spaces, after discharge of this cargo, shall not be pumped by the fixed bilge pumps. A portable pump shall be used, as necessary, to clear the cargo spaces of the water.

ALUMINA, CALCINED

Description
Light to dark grey in colour. No moisture content. This cargo is insoluble in water.

Characteristics

Physical properties			
Size	**Angle of repose**	**Bulk density (kg/m^3)**	**Stowage factor (m^3/t)**
Small particles and lumps	Not applicable	1,639	0.61
Hazard classification			
Class	**Subsidiary hazard(s)**	**MHB**	**Group**
Not applicable	Not applicable	Not applicable	C

Hazard
No special hazards.
This cargo is non-combustible or has a low fire risk.

Stowage and segregation
No special requirements.

Hold cleanliness
No special requirements.

Weather precautions
This cargo shall be kept as dry as practicable. This cargo shall not be handled during precipitation. During handling of this cargo, all non-working hatches of the cargo spaces into which this cargo is loaded, or to be loaded, shall be closed.

Loading
Trim in accordance with the relevant provisions required under sections 4 and 5 of this Code.

Precautions
Appropriate precautions shall be taken to protect machinery and accommodation spaces from the dust of the cargo. Bilge wells of the cargo spaces shall be protected from ingress of the cargo. Due consideration shall be given to protect equipment from the dust of the cargo. Persons who may be exposed to the dust of the cargo shall wear protective clothing, goggles or other equivalent dust eye-protection and dust filter masks, as necessary.

Ventilation
No special requirements.

Carriage
No special requirements.

Discharge
No special requirements.

Clean-up
The water used for the cleaning of the cargo spaces, after discharge of this cargo, shall not be pumped by the fixed bilge pumps. A portable pump shall be used, as necessary, to clear the cargo spaces of the water.

ALUMINA HYDRATE

Description
Alumina hydrate is a fine, moist, white (light coloured), odourless powder. Insoluble in water and organic liquids.

Characteristics

Physical properties			
Size	**Angle of repose**	**Bulk density (kg/m^3)**	**Stowage factor (m^3/t)**
Fine powder	Not applicable	500 to 1,500	0.67 to 2.00
Hazard classification			
Class	**Subsidiary hazard(s)**	**MHB**	**Group**
Not applicable	Not applicable	CR	A and B

Hazard
This cargo may liquefy if shipped at a moisture content in excess of its transportable moisture limit (TML). See sections 7 and 8 of this Code. Alumina Hydrate dust is very abrasive and penetrating. Irritating to eyes, skin and mucous membranes.
This cargo is non-combustible or has low fire risk.

Stowage and segregation
"Separated from" oxidizing materials.

Hold cleanliness
Clean and dry as relevant to the hazards of the cargo.

Weather precautions
When a cargo is carried in a ship other than a ship complying with the requirements in 7.3.2 of this Code, the following provisions shall be complied with:

.1 the moisture content of the cargo shall be kept less than its TML during loading operations and the voyage;

.2 unless expressly provided otherwise in this individual schedule, the cargo shall not be handled during precipitation;

.3 unless expressly provided otherwise in this individual schedule, during handling of the cargo, all non-working hatches of the cargo spaces into which the cargo is loaded, or to be loaded, shall be closed;

.4 the cargo may be handled during precipitation under the conditions stated in the procedures required in 4.3.3 of this Code; and

.5 the cargo in a cargo space may be discharged during precipitation provided that the total amount of the cargo in the cargo space is to be discharged in the port.

Loading
Trim in accordance with the relevant provisions required under sections 4 and 5 of this Code.

Precautions
Bilge wells shall be clean, dry and covered as appropriate, to prevent ingress of the cargo. The bilge system of a cargo space to which this cargo is to be loaded shall be tested to ensure it is working. Appropriate precautions shall be taken to protect machinery and accommodation spaces from the dust of the cargo. Due consideration shall be given to protect equipment from the dust of the cargo. Persons who may be exposed to the dust of the cargo shall wear goggles or other equivalent dust eye-protection and dust filter masks. Those persons shall wear protective clothing, as necessary.

Ventilation
No special requirements.

Carriage
The appearance of the surface of this cargo shall be checked regularly during the voyage. If free water above the cargo or fluid state of the cargo is observed during the voyage, the master shall take appropriate actions to prevent cargo shifting and potential capsize of the ship, and give consideration to seeking emergency entry into a place of refuge.

Discharge
No special requirements.

Clean-up
The water used for the cleaning of the cargo spaces, after discharge of this cargo, shall not be pumped by the fixed bilge pumps. A portable pump shall be used, as necessary, to clear the cargo spaces of the water.

Emergency procedures

Special emergency equipment to be carried Protective clothing (gloves, boots, coveralls and headgear). Self-contained breathing apparatus.
Emergency procedures Wear protective clothing and self-contained breathing apparatus. **Emergency action in the event of fire** Nil (non-combustible). **Medical first aid** Refer to the *Medical First Aid Guide* (MFAG), as amended.

ALUMINA SILICA

Description
White, consists of alumina and silica crystals. Low moisture content (1% to 5%).
Lumps 60%.
Coarse grained powder – 40%. This cargo is insoluble in water.

Characteristics

Physical properties			
Size	**Angle of repose**	**Bulk density (kg/m^3)**	**Stowage factor (m^3/t)**
Not applicable	Not applicable	1,429	0.70
Hazard classification			
Class	**Subsidiary hazard(s)**	**MHB**	**Group**
Not applicable	Not applicable	Not applicable	C

Hazard
No special hazards.
This cargo is non-combustible or has a low fire risk.

Stowage and segregation
No special requirements.

Hold cleanliness
No special requirements.

Weather precautions
This cargo shall be kept as dry as practicable. This cargo shall not be handled during precipitation. During handling of this cargo, all non-working hatches of the cargo spaces into which this cargo is loaded, or to be loaded, shall be closed.

Loading
Trim in accordance with the relevant provisions required under sections 4 and 5 of this Code.

Precautions
Appropriate precautions shall be taken to protect machinery and accommodation spaces from the dust of the cargo. Bilge wells of the cargo spaces shall be protected from ingress of the cargo. Due consideration shall be given to protect equipment from the dust of the cargo. Persons who may be exposed to the dust of the cargo shall wear protective clothing, goggles or other equivalent dust eye-protection and dust filter masks, as necessary.

Ventilation
No special requirements.

Carriage
No special requirements.

Discharge
No special requirements.

Clean-up
The water used for the cleaning of the cargo spaces, after discharge of this cargo, shall not be pumped by the fixed bilge pumps. A portable pump shall be used, as necessary, to clear the cargo spaces of the water.

ALUMINA SILICA, pellets

Description
White to off-white. No moisture content.

Characteristics

Physical properties			
Size	**Angle of repose**	**Bulk density (kg/m^3)**	**Stowage factor (m^3/t)**
Length: 6.4 mm to 25.4 mm Diameter: 6.4 mm	Not applicable	1,190 to 1,282	0.78 to 0.84
Hazard classification			
Class	**Subsidiary hazard(s)**	**MHB**	**Group**
Not applicable	Not applicable	Not applicable	C

Hazard
No special hazards.
This cargo is non-combustible or has a low fire risk.

Stowage and segregation
No special requirements.

Hold cleanliness
No special requirements.

Weather precautions
This cargo shall be kept as dry as practicable. This cargo shall not be handled during precipitation. During handling of this cargo, all non-working hatches of the cargo spaces into which this cargo is loaded, or to be loaded, shall be closed.

Loading
Trim in accordance with the relevant provisions required under sections 4 and 5 of this Code.

Precautions
Appropriate precautions shall be taken to protect machinery and accommodation spaces from the dust of the cargo. Bilge wells of the cargo spaces shall be protected from ingress of the cargo. Due consideration shall be given to protect equipment from the dust of the cargo. Persons who may be exposed to the dust of the cargo shall wear protective clothing, goggles or other equivalent dust eye-protection and dust filter masks, as necessary.

Ventilation
No special requirements.

Carriage
No special requirements.

Discharge
No special requirements.

Clean-up
No special requirements.

ALUMINIUM FERROSILICON POWDER UN 1395

Description
Fine powder or briquettes.

Characteristics

Physical properties			
Size	**Angle of repose**	**Bulk density (kg/m^3)**	**Stowage factor (m^3/t)**
Not applicable	Not applicable	-	**-**
Hazard classification			
Class	**Subsidiary hazard(s)**	**MHB**	**Group**
4.3	6.1		B

Hazard
In contact with water may evolve hydrogen, a flammable gas which may form an explosive mixture in air. Impurities may, under similar conditions, produce phosphine and arsine, which are highly toxic gases.
This cargo is non-combustible or has a low fire risk.

Stowage and segregation
"Separated from" foodstuffs and all class 8 liquids.

Hold cleanliness
Clean and dry as relevant to the hazards of the cargo.

Weather precautions
This cargo shall be kept as dry as practicable. This cargo shall not be handled during precipitation. During handling of this cargo, all non-working hatches of the cargo spaces into which this cargo is loaded, or to be loaded, shall be closed.

Loading
Trim in accordance with the relevant provisions required under sections 4 and 5 of this Code.

Precautions
Prior to loading this cargo, a certificate shall be provided by the manufacturer or shipper stating that the material was stored under cover, but exposed to the weather in the particle size to be shipped, for not less than 3 days prior to shipment. The bulkheads between the cargo spaces and the engine-room shall be gastight and shall be inspected and approved by the Administration. During handling of this cargo, "NO SMOKING" signs shall be posted on decks and in areas adjacent to cargo spaces and no naked lights shall be permitted in these areas. At least two sets of self-contained breathing apparatus, in addition to those required by SOLAS regulation II-2/10.10, shall be provided on board.

Ventilation
Continuous mechanical ventilation shall be conducted during the voyage for the cargo spaces carrying this cargo. If maintaining ventilation endangers the ship or the cargo, it may be interrupted unless there is a risk of explosion or other danger due to interruption of the ventilation. In any case, mechanical ventilation shall be maintained for a reasonable period prior to discharge.

Carriage
For quantitative measurements of hydrogen, phosphine and arsine and silane, suitable detectors for each gas or combination of gases shall be on board while this cargo is carried.

The detectors shall be of certified safe type for use in explosive atmosphere. The concentrations of these gases in the cargo spaces carrying this cargo shall be measured regularly, during the voyage, and the results of the measurements shall be recorded and kept on board.

Discharge
No special requirements.

Clean-up
After discharge of this cargo, the cargo spaces shall be swept clean twice. Water shall not be used for cleaning of the cargo space which has contained this cargo, because of danger of gas.

Emergency procedures

Special emergency equipment to be carried Self-contained breathing apparatus.
Emergency procedures Wear self-contained breathing apparatus. **Emergency action in the event of fire** Batten down and use CO_2, if available. **Do not use water**. **Medical first aid** Refer to the *Medical First Aid Guide* (MFAG), as amended.

ALUMINIUM FLUORIDE

Description
Aluminium fluoride is a fine, white powder, odourless which presents itself dry. The cargo is not cohesive. The moisture content is less than 1%.

Characteristics

Physical properties			
Size	**Angle of repose**	**Bulk density (kg/m^3)**	**Stowage factor (m^3/t)**
Fine powder	32° to 35°	1,527	0.65
Hazard classification			
Class	**Subsidiary hazard(s)**	**MHB**	**Group**
Not applicable	Not applicable	Not applicable	A

Hazard
This cargo may liquefy if shipped at a moisture content in excess of its transportable moisture limit (TML). See sections 7 and 8 of this Code.
The cargo may be slightly irritating to eyes and mucous membranes. In contact with acids, it develops toxic vapours of hydrogen fluoride. If involved in a fire, it may develop toxic fumes of hydrogen fluoride.
This cargo is non-combustible or has a low fire risk.

Stowage and segregation
No special requirements.

Hold cleanliness
No special requirements.

Weather precautions
When a cargo is carried in a ship other than a ship complying with the requirements in 7.3.2 of this Code, the following provisions shall be complied with:

.1 the moisture content of the cargo shall be kept less than its TML during loading operations and the voyage;

.2 unless expressly provided otherwise in this individual schedule, the cargo shall not be handled during precipitation;

.3 unless expressly provided otherwise in this individual schedule, during handling of the cargo, all non-working hatches of the cargo spaces into which the cargo is loaded, or to be loaded, shall be closed;

.4 the cargo may be handled during precipitation under the conditions stated in the procedures required in 4.3.3 of this Code; and

.5 the cargo in a cargo space may be discharged during precipitation provided that the total amount of the cargo in the cargo space is to be discharged in the port.

Loading
Trim in accordance with the relevant provisions required under sections 4 and 5 of this Code.

Precautions
Persons who may be exposed to the dust of the cargo shall wear protective clothing, goggles or other equivalent dust eye-protection and dust filter masks, as necessary.

Ventilation
No special requirements.

Carriage
The appearance of the surface of this cargo shall be checked regularly during the voyage. If free water above the cargo or fluid state of the cargo is observed during the voyage, the master shall take appropriate actions to prevent cargo shifting and potential capsize of the ship, and give consideration to seeking emergency entry into a place of refuge.

Discharge
Maintain accommodation and equipment protected from dust.

Clean-up
Make sure that decks and holds are shovelled and swept clean before using water.

ALUMINIUM NITRATE UN 1438

Description
Colourless or white crystals. Soluble in water.

Characteristics

Physical properties			
Size	**Angle of repose**	**Bulk density (kg/m^3)**	**Stowage factor (m^3/t)**
Not applicable	Not applicable	-	-
Hazard classification			
Class	**Subsidiary hazard(s)**	**MHB**	**Group**
5.1	Not applicable		B

Hazard
If involved in a fire will greatly intensify the burning of combustible materials and yield toxic nitrous fumes. Although non-combustible, mixtures with combustible material are easily ignited and may burn fiercely.

Stowage and segregation
"Separated from" foodstuffs.

Hold cleanliness
Clean and dry as relevant to the hazards of the cargo.

Weather precautions
This cargo shall be kept as dry as practicable. This cargo shall not be handled during precipitation. During handling of this cargo, all non-working hatches of the cargo spaces into which this cargo is loaded, or to be loaded, shall be closed.

Loading
Trim in accordance with the relevant provisions required under sections 4 and 5 of this Code.

Precautions
Due consideration shall be given to prevent contact of the cargo and combustible materials. The master and officers are to note that the ship's fixed gas fire-fighting installation will be ineffective on fires involving this cargo and that applying copious amounts of water may be necessary.

Ventilation
No special requirements.

Carriage
No special requirements.

Discharge
No special requirements.

Clean-up
No special requirements.

Emergency procedures

Special emergency equipment to be carried Protective clothing (gloves, overalls and headgear). Self-contained breathing apparatus. Spray nozzles.
Emergency procedures Wear protective clothing and self-contained breathing apparatus. **Emergency action in the event of fire** Use copious quantities of water, which is best applied in the form of a spray to avoid disturbing the surface of the material. The material may fuse or melt; in which condition application of water may result in extensive scattering of the molten materials. Exclusion of air or the use of CO_2 will not control the fire. Due consideration should be given to the effect on the stability of the ship due to accumulated water. **Medical first aid** Refer to the *Medical First Aid Guide* (MFAG), as amended.

ALUMINIUM SILICON POWDER, UNCOATED UN 1398

Description
Powder

Characteristics

Physical properties			
Size	**Angle of repose**	**Bulk density (kg/m^3)**	**Stowage factor (m^3/t)**
Not applicable	Not applicable	-	-
Hazard classification			
Class	**Subsidiary hazard(s)**	**MHB**	**Group**
4.3	Not applicable		B

Hazard
In contact with water may evolve hydrogen, a flammable gas which may form explosive mixtures with air. Impurities may, under similar circumstances, produce phosphine and arsine, which are highly toxic gases. May also evolve silanes, which are toxic and may ignite spontaneously.
This cargo is non-combustible or has a low fire risk.

Stowage and segregation
"Separated from" foodstuffs and all class 8 liquids.

Hold cleanliness
Clean and dry as relevant to the hazards of the cargo.

Weather precautions
This cargo shall be kept as dry as practicable before loading, during loading and during voyage. This cargo shall not be loaded during precipitation. During loading of this cargo, all non-working hatches of the cargo spaces to which this cargo is loaded, or to be loaded, shall be closed.

Loading
Trim in accordance with the relevant provisions required under sections 4 and 5 of this Code.

Precautions
Prior to loading this cargo, a certificate shall be provided by the manufacturer or shipper stating that the material was stored under cover, but exposed to the weather in the particle size to be shipped, for not less than 3 days prior to shipment. The bulkheads between the cargo spaces and the engine-room shall be gastight and shall be inspected and approved by the Administration. During handling of this cargo, "NO SMOKING" signs shall be posted on decks and in areas adjacent to cargo spaces and no naked lights shall be permitted in these areas. This cargo shall be loaded in cargo spaces fitted with mechanical ventilation having at least two separate fans. The total ventilation shall be at least six air changes per hour, based on the empty space. At least two sets of self-contained breathing apparatus, in addition to those required by SOLAS regulation II-2/10.10, shall be provided on board.

Ventilation
Continuous mechanical ventilation shall be conducted during the voyage for the cargo spaces carrying this cargo. If maintaining ventilation endangers the ship or the cargo, it may be interrupted unless there is a risk of explosion or other danger due to interruption of the ventilation. In any case mechanical ventilation shall be maintained for a reasonable period prior to discharge. Ventilation shall be arranged such that any escaping gases are minimized from reaching living quarters on or under the deck.

Carriage
For quantitative measurements of hydrogen, phosphine, arsine, suitable detectors for each gas or combination of gases shall be on board while this cargo is carried. The detectors shall be of certified safe type for use in explosive atmosphere. The concentrations of these gases in the cargo spaces carrying this cargo shall be measured regularly, during the voyage, and the results of the measurements shall be recorded and kept on board.

Discharge
No special requirements.

Clean-up
After discharge of this cargo, the cargo spaces shall be swept clean twice.
Water shall not be used for cleaning of the cargo space which has contained this cargo, because of danger of gas.

Emergency procedures

Special emergency equipment to be carried Self-contained breathing apparatus.
Emergency procedures Wear self-contained breathing apparatus. **Emergency action in the event of fire** Batten down and use CO_2, if available. **Do not use water**. **Medical first aid** Refer to the *Medical First Aid Guide* (MFAG), as amended.

ALUMINIUM SMELTING BY-PRODUCTS or
ALUMINIUM REMELTING BY-PRODUCTS UN 3170

Description
Aluminium smelting by-products are wastes from the aluminium manufacturing process. Grey or black powder or lumps with some metallic inclusions. The term encompasses various different waste materials, which include but are not limited to:

Aluminium dross
Aluminium salt slags
Aluminium skimmings
Spent cathodes
Spent potliner

Characteristics

Physical properties			
Size	**Angle of repose**	**Bulk density (kg/m^3)**	**Stowage factor (m^3/t)**
Not applicable	Not applicable	1,220	0.82
Hazard classification			
Class	**Subsidiary hazard(s)**	**MHB**	**Group**
4.3	Not applicable		B

Hazard
Contact with water may cause heating with possible evolution of flammable and toxic gases such as hydrogen, ammonia and acetylene.
Fire is unlikely but may follow an explosion of flammable gas and will be difficult to extinguish. In port, flooding may be considered, but due consideration should be given to stability.
This cargo is non-combustible or has a low fire risk.

Stowage and segregation
"Separated from" foodstuffs and all class 8 liquids.

Hold cleanliness
Clean and dry as relevant to the hazards of the cargo.

Weather precautions
This cargo shall be kept as dry as practicable. This cargo shall not be handled during precipitation. During handling of this cargo, all non-working hatches of the cargo spaces into which this cargo is loaded, or to be loaded, shall be closed.

Loading
Trim in accordance with the relevant provisions required under sections 4 and 5 of this Code.

Precautions
Prior to loading this cargo, a certificate shall be provided by the manufacturer or shipper stating that, after manufacture, the material was stored under cover, but exposed to the weather in the particle size to be shipped, for not less than 3 days prior to shipment. Whilst the ship is alongside and the hatches of the cargo spaces containing this cargo are closed, the mechanical ventilation shall be operated continuously as weather permits. During handling of this cargo, "NO SMOKING" signs shall be posted on decks and in areas adjacent to cargo spaces and no naked lights shall be permitted in these areas. At least two self-contained breathing apparatus, in addition to those required by SOLAS regulation II-2/10.10, shall be provided on board. Bulkheads between the cargo spaces and the engine-room shall be gastight. Inadvertent pumping through machinery spaces shall be avoided.

Ventilation
Continuous mechanical ventilation shall be conducted during the voyage for the cargo spaces carrying this cargo. If maintaining ventilation endangers the ship or the cargo, it may be interrupted unless there is a risk of explosion or other danger due to interruption of the ventilation. In any case mechanical ventilation shall be maintained for a reasonable period prior to discharge. Ventilation shall be arranged such that any escaping gases are minimized from reaching living quarters on or under the deck.

Carriage
For quantitative measurements of hydrogen, ammonia and acetylene, suitable detectors for each gas or combination of gases shall be on board while this cargo is carried. The detectors shall be of certified safe type for use in explosive atmosphere. The concentrations of these gases in the cargo spaces carrying this cargo shall be measured regularly, during the voyage, and the results of the measurements shall be recorded and kept on board.

Discharge
No special requirements.

Clean-up
Water shall not be used for cleaning of the cargo space which has contained this cargo, because of danger of gas.

Emergency procedures

Special emergency equipment to be carried Nil
Emergency procedures Nil **Emergency action in the event of fire** Batten down and use CO_2, if available. **Do not use water**. If this proves ineffective, endeavour to stop fire from spreading and head for the nearest suitable port. **Medical first aid** Refer to the *Medical First Aid Guide* (MFAG), as amended.

ALUMINIUM SMELTING/REMELTING BY-PRODUCTS, PROCESSED

The provisions of this schedule shall not apply to ALUMINIUM SMELTING BY-PRODUCTS or ALUMINIUM REMELTING BY-PRODUCTS UN 3170.

Description
Product obtained by treating the by-products of merging/recasting of aluminium with water and/or alkalis solutions to render the material less reactive with water. A damp powder with a slight smell of ammonia.

Characteristics

Physical properties			
Size	**Angle of repose**	**Bulk density (kg/m^3)**	**Stowage factor (m^3/t)**
Less than 1 mm	Not applicable	1,080 to 1,750	0.57 to 0.93
Hazard classification			
Class	**Subsidiary hazard(s)**	**MHB**	**Group**
Not applicable	Not applicable	WF and/or WT and/or CR	A and B

Hazard
This cargo may develop small amount of hydrogen, a flammable gas which may form explosive mixtures with air, and of ammonia, which is a highly toxic gas.
This cargo may liquefy if shipped at a moisture content in excess of its transportable moisture limit (TML). See sections 7 and 8 of this Code. Corrosive to eyes.

Stowage and segregation
"Separated from" foodstuffs and all class 8 liquids. Segregation as for class 4.3 materials.

Hold cleanliness
Clean and dry as relevant to the hazards of the cargo.

Weather precautions
This cargo shall be kept as dry as practicable and the moisture content shall be kept less than its TML during loading operations and the voyage. This cargo shall not be handled during precipitation. During handling of this cargo, all non-working hatches of the cargo spaces into which this cargo is loaded, or to be loaded, shall be closed.

Loading
Trim in accordance with the relevant provisions required under sections 4 and 5 of this Code.

Precautions
Persons who may be exposed to the cargo shall wear personal protective equipment, including goggles and/or skin protection as necessary. Prior to loading this cargo, a weathering certificate shall be provided by the manufacturer or shipper stating that, after manufacture, the material was stored under cover, but exposed to the weather in the particle size to be shipped, for not less than four weeks prior to shipment. Whilst the ship is alongside and the hatches of the cargo spaces containing this cargo are closed, the mechanical ventilation shall be operated continuously as weather permits. During handling of this cargo, "NO SMOKING" signs shall be posted on decks and in areas adjacent to cargo spaces and no naked lights shall be permitted in these areas. Bulkheads between the cargo spaces and the engine-room shall be gastight. Inadvertent pumping through machinery spaces shall be avoided. Bilge wells shall be clean, dry and covered as appropriate, to prevent ingress of the cargo.

Ventilation
Continuous mechanical ventilation shall be conducted during the voyage for the cargo spaces carrying this cargo. If maintaining ventilation endangers the ship or the cargo, it may be interrupted unless there is a risk of explosion or other danger due to interruption of the ventilation. In any case, mechanical ventilation shall be maintained for a reasonable period prior to discharge. Ventilation shall be arranged such that any escaping gases are minimized from reaching living quarters on or under the deck.

Carriage
For quantitative measurements of hydrogen, ammonia and acetylene, suitable detectors for each gas or combination of gases shall be on board while this cargo is carried. The detectors shall be of certified safe type for use in explosive atmosphere. The concentrations of these gases in the cargo spaces carrying this cargo shall be measured regularly, during the voyage, and the results of the measurements shall be recorded and kept on board. The appearance of the surface of this cargo shall be checked regularly during the voyage. If free water above the cargo or fluid state of the cargo is observed during the voyage, the master shall take appropriate actions to prevent cargo shifting and potential capsize of the ship, and give consideration to seeking emergency entry into a place of refuge. Hatches of the cargo spaces carrying this cargo shall be weathertight to prevent the ingress of water.

Discharge
No special requirements.

Clean-up
Persons who may be exposed to the cargo shall wear personal protective equipment including goggles and/or skin protection as necessary. After discharge of this cargo, the bilge wells and scuppers of the cargo spaces shall be checked and any blockage shall be removed.
Prior to using water for hold cleaning, holds shall be swept to remove as much cargo residues as practicable.

Emergency procedures

Special emergency equipment to be carried Nil
Emergency procedures Nil **Emergency action in the event of fire** Batten down and use CO_2, if fitted. **Medical first aid** Refer to the *Medical First Aid Guide* (MFAG), as amended.

AMMONIUM NITRATE UN 1942
with not more than 0.2% total combustible material, including any organic substance, calculated as carbon to the exclusion of any other added substance

Description
White crystals, prills or granules. Wholly or partly soluble in water.

Note: This schedule should only be used for substances that do not exhibit properties of class 1 when tested in accordance with Test Series 1 and 2 of class 1 (see *UN Manual of Tests and Criteria*).

Characteristics

Physical properties			
Size	**Angle of repose**	**Bulk density (kg/m^3)**	**Stowage factor (m^3/t)**
1 mm to 4 mm	27° to 42°	1,000	1.00
Hazard classification			
Class	**Subsidiary hazard(s)**	**MHB**	**Group**
5.1	Not applicable		B

Hazard
Oxidizer, supports combustion. A major fire aboard a ship carrying this cargo may involve a risk of explosion in the event of contamination (e.g. by fuel oil) or strong confinement. An adjacent detonation may also involve a risk of explosion. If heated strongly, this cargo decomposes, giving off toxic gases and gases which support combustion.
Ammonium nitrate dust might be irritating to skin and mucous membranes.
This cargo is hygroscopic and will cake if wet.

Stowage and segregation
"Separated from" sources of heat or ignition (*see also* **Loading**).
"Separated by a complete compartment or hold from" combustible materials (particularly liquids), chlorates, chlorides, chlorites, hypochlorites, nitrites, permanganates and fibrous materials (e.g. cotton, jute, sisal, etc.).
"Separated from" all other goods.
If the bulkhead between the cargo space and the engine-room is not insulated to class "A-60" standard, this cargo shall be stowed "away from" the bulkhead.

Hold cleanliness
Clean and dry as relevant to the hazards of the cargo.

Weather precautions
This cargo shall be kept as dry as practicable. This cargo shall not be handled during precipitation. During handling of this cargo, all non-working hatches of the cargo spaces into which this cargo is loaded, or to be loaded, shall be closed.

Loading
This cargo shall not be loaded in cargo spaces adjacent to fuel oil tank(s), unless heating arrangements for the tank(s) are disconnected and remain disconnected during the entire voyage.
Trim in accordance with the relevant provisions required under sections 4 and 5 of this Code.

Prior to loading, the following provisions shall be complied with:

.1 This cargo shall not be accepted for loading when the temperature of the cargo is above 40°C.

.2 Prior to loading, the shipper shall provide the master with a certificate signed by the shipper stating that all the relevant conditions of the cargo required by this Code, including this individual schedule, have been met.

.3 The fuel tanks situated under the cargo spaces to be used for the transport of this cargo shall be pressure tested to ensure that there is no leakage of manholes and piping systems leading to the tanks.

.4 All electrical equipment, other than those of approved intrinsically safe type, in the cargo spaces to be used for this cargo shall be electrically disconnected from the power source, by appropriate means other than a fuse, at a point external to the space. This situation shall be maintained while the cargo is on board.

.5 Due consideration shall be given to the possible need to open hatches in case of fire to provide maximum ventilation and to apply water in an emergency and the consequent risk to the stability of the ship through fluidization of the cargo.

During loading, the following provisions shall be complied with:

.6 Bunkering of fuel oil shall not be allowed. Pumping of fuel oil in spaces adjacent to the cargo spaces for this cargo, other than the engine-room, shall not be allowed.

.7 As far as reasonably practicable, combustible securing and protecting materials shall not be used. When wooden dunnage is necessary, only a minimum shall be used.

Precautions

This cargo shall only be accepted for loading when the competent authority is satisfied with regard to the resistance to detonation of this material based on the test.* Prior to loading, the shipper shall provide the master with a certificate stating that the resistance to detonation of this material is in compliance with this requirement. The master and officers are to note that the ship's fixed gas fire-extinguishing installation will be ineffective on the fire involving this cargo and that applying copious amounts of water may be necessary. Pressure on the fire mains shall be maintained for fire-fighting and fire hoses shall be laid out or be in position and ready for immediate use during loading and discharging of this cargo. No welding, burning, cutting or other operations involving the use of fire, open flame, spark- or arc-producing equipment shall be carried out in the vicinity of the cargo spaces containing this cargo except in an emergency. Precautions shall be taken to avoid the penetration of this cargo into other cargo spaces, bilges and other enclosed spaces. Smoking shall not be allowed on deck and in the cargo spaces and "NO SMOKING" signs shall be displayed on deck whenever this cargo is on board. The hatches of the cargo spaces, whenever this material is on board, shall be kept free to be capable of being opened in case of an emergency.

* Reference is made to section 5 of appendix 2 to this Code.

Appropriate precautions shall be taken to protect machinery and accommodation spaces from the dust of the cargo. Bilge wells of the cargo spaces shall be protected from ingress of the cargo. Due consideration shall be given to protect equipment from the dust of the cargo. Persons who may be exposed to the dust of the cargo shall wear goggles or other equivalent dust eye-protection and dust filter masks. Those persons shall wear protective clothing, as necessary.

Ventilation
The cargo spaces carrying this cargo shall not be ventilated during voyage.

Carriage
Hatches of the cargo spaces carrying this cargo shall be weathertight to prevent the ingress of water. The temperature of this cargo shall be monitored and recorded daily during the voyage to detect decomposition, which may result in heating and oxygen depletion.

Discharge
If this cargo has hardened, it shall be trimmed to avoid the formation of overhangs, as necessary. Bunkering of fuel oil shall not be allowed. Pumping of fuel oil in spaces adjacent to the cargo spaces for this cargo, other than the engine-room, shall not be allowed.

Clean-up
After discharge of this cargo, the bilge wells and the scuppers of the cargo spaces shall be checked and any blockage in the bilge wells and the scuppers shall be removed.

Emergency procedures

Special emergency equipment to be carried Protective clothing (boots, gloves, coveralls and headgear). Self-contained breathing apparatus.
Emergency procedures Wear protective clothing and self-contained breathing apparatus. **Emergency action in the event of fire** ***Fire in a cargo space containing this material:*** Open hatches to provide maximum ventilation. Ship's fixed gas fire-extinguishing installation will be inadequate. Use copious amounts of water and isolate the source of heat, if any. Flooding of the cargo space may be considered but due consideration should be given to stability. ***Fire in an adjacent cargo space:*** Open hatches to provide maximum ventilation. Heat transferred from fire in an adjacent space can cause the material to decompose with consequent evolution of toxic fumes. Dividing bulkheads should be cooled. **Medical first aid** Refer to the *Medical First Aid Guide* (MFAG), as amended.

AMMONIUM NITRATE BASED FERTILIZER UN 2067

Ammonium nitrate-based fertilizers classified as UN 2067 are uniform mixtures containing ammonium nitrate as the main ingredient within the following composition limits:

.1 not less than 90% ammonium nitrate with not more than 0.2% total combustible/organic material calculated as carbon and with added matter, if any, which is inorganic and inert towards ammonium nitrate; or

.2 less than 90% but more than 70% ammonium nitrate with other inorganic materials or more than 80% but less than 90% ammonium nitrate mixed with calcium carbonate and/or dolomite and/or mineral calcium sulphate and not more than 0.4% total combustible/organic material calculated as carbon; or

.3 ammonium nitrate-based fertilizers containing mixtures of ammonium nitrate and ammonium sulphate with more than 45% but less than 70% ammonium nitrate and not more than 0.4% total combustible organic material calculated as carbon such that the sum of the percentage compositions of ammonium nitrate and ammonium sulphate exceeds 70%.

Description
Crystals, granules or prills. Wholly or partly soluble in water. Hygroscopic.

Notes:

1. All nitrate ions for which there is present in the mixture a molecular equivalent of ammonium ions should be calculated as ammonium nitrate.

2. The transport of ammonium nitrate materials which are liable to self-heating sufficient to initiate decomposition is prohibited.

3. This entry may only be used for substances that do not exhibit properties of class 1 when tested in accordance with Test Series 1 and 2 of the *UN Manual of Tests and Criteria*.

Characteristics

Physical properties			
Size	**Angle of repose**	**Bulk density (kg/m^3)**	**Stowage factor (m^3/t)**
1 mm to 5 mm	27° to 42°	900 to 1,200	0.83 to 1.11
Hazard classification			
Class	**Subsidiary hazard(s)**	**MHB**	**Group**
5.1	Not applicable		B

Hazard
Supports combustion. A major fire aboard a ship carrying these substances may involve a risk of explosion in the event of contamination (e.g. by fuel oil) or strong confinement. An adjacent detonation may involve a risk of explosion.
If heated strongly decomposes, risk of toxic fumes and gases which support combustion, in the cargo space and on deck.
Fertilizer dust might be irritating to skin and mucous membranes.
This cargo is hygroscopic and will cake if wet.

Stowage and segregation
"Separated by a complete compartment or hold from" combustible materials (particularly liquid), bromates, chlorates, chlorites, hypochlorites, nitrites, perchlorates, permanganates, powdered metals and vegetable fibres (e.g. cotton, jute, sisal, etc.).
"Separated from" all other goods.
"Separated from" sources of heat or ignition (*see also* **Loading**).
Not to be stowed immediately adjacent to any tank, double bottom or pipe containing heated fuel oil unless there are means to monitor and control the temperature so that it does not exceed 50°C.
If the bulkhead between the cargo space and the engine-room is not insulated to class A-60 standard, this cargo shall be stowed "away from" the bulkhead.

Hold cleanliness
Clean and dry as relevant to the hazards of the cargo.

Weather precautions
This cargo shall be kept as dry as practicable. This cargo shall not be handled during precipitation. During handling of this cargo, all non-working hatches of the cargo spaces into which this cargo is loaded, or to be loaded, shall be closed.

Loading
Trim in accordance with the relevant provisions required under sections 4 and 5 of this Code.

Prior to loading, the following provisions shall be complied with:

.1 This cargo shall not be accepted for loading when the temperature of the cargo is above 40°C.

.2 Prior to loading, the shipper shall provide the master with a certificate signed by the shipper stating that all the relevant conditions of the cargo required by this Code, including this individual schedule, have been met.

.3 The fuel tanks situated under the cargo spaces to be used for the transport of this cargo shall be pressure tested to ensure that there is no leakage of manholes and piping systems leading to the tanks.

.4 All electrical equipment, other than those of approved intrinsically safe type, in the cargo spaces to be used for this cargo shall be electrically disconnected from the power source, by appropriate means other than a fuse, at a point external to the space. This situation shall be maintained while the cargo is on board.

.5 Due consideration shall be given to the possible need to open hatches in case of fire to provide maximum ventilation and to apply water in an emergency and the consequent risk to the stability of the ship through fluidization of the cargo.

During loading, the following provisions shall be complied with:

.6 Bunkering of fuel oil shall not be allowed. Pumping of fuel oil in spaces adjacent to the cargo spaces for this cargo, other than the engine-room, shall not be allowed.

.7 As far as reasonably practicable, combustible securing and protecting materials shall not be used. When wooden dunnage is necessary, only a minimum shall be used.

Precautions
This cargo shall only be accepted for loading when the competent authority is satisfied with regard to the resistance to detonation of this material based on the test.* The master and officers are to note that the ship's fixed gas fire-extinguishing installation will be ineffective on fires involving this cargo and that applying copious amounts of water may be necessary. Prior to loading, the shipper shall provide the master with a certificate stating that the resistance to detonation of this material is in compliance with this requirement. Pressure on the fire mains shall be maintained for fire-fighting and fire hoses shall be laid out or be in position and ready for immediate use during loading and discharging of this cargo. No welding, burning, cutting or other operations involving the use of fire, open flame, spark- or arc-producing equipment shall be carried out in the vicinity of the cargo spaces containing this cargo except in an emergency. Smoking shall not be allowed on deck and in the cargo spaces and "NO SMOKING" signs shall be displayed on deck whenever this cargo is on board. Precautions shall be taken to avoid the penetration of this cargo into other cargo spaces, bilges and other enclosed spaces. The hatches of the cargo spaces, whenever this material is on board, shall be kept free to be capable of being opened in case of an emergency.

Appropriate precautions shall be taken to protect machinery and accommodation spaces from the dust of the cargo. Bilge wells of the cargo spaces shall be protected from ingress of the cargo. Due consideration shall be given to protect equipment from the dust of the cargo. Persons who may be exposed to the dust of the cargo shall wear goggles or other equivalent dust eye-protection and dust filter masks. Those persons shall wear protective clothing, as necessary.

Ventilation
The cargo spaces carrying this cargo shall not be ventilated during voyage.

Carriage
Hatches of the cargo spaces carrying this cargo shall be weathertight to prevent the ingress of water. The temperature of this cargo shall be monitored and recorded daily during the voyage to detect decomposition which may result in heating and oxygen depletion.

Discharge
Bunkering of fuel oil shall not be allowed. Pumping of fuel oil in spaces adjacent to the cargo spaces for this cargo, other than the engine-room, shall not be allowed. Ammonium nitrate based fertilizers are hygroscopic and may cake in overhangs, impairing safety during discharge. If this cargo has hardened, it shall be trimmed to avoid the formation of overhangs, as necessary.

Clean-up
After discharge of this cargo, the bilge wells and the scuppers of the cargo spaces shall be checked and any blockage in the bilge wells and the scuppers shall be removed.

* Reference is made to section 5 of appendix 2 to this Code.

Emergency procedures

Special emergency equipment to be carried
Protective clothing (boots, gloves, coveralls and headgear).
Self-contained breathing apparatus.

Emergency procedures
Wear protective clothing and self-contained breathing apparatus.

Emergency action in the event of fire
Fire in a cargo space containing this material: Open hatches to provide maximum ventilation. Ship's fixed gas fire-extinguishing installation will be inadequate. Use copious quantities of water and isolate the source of heat, if any. Flooding of the cargo space may be considered but due consideration should be given to stability.

Fire in an adjacent cargo space: Open hatches to provide maximum ventilation. Heat transferred from fire in an adjacent space can cause the material to decompose with consequent evolution of toxic fumes. Dividing bulkheads should be cooled.

Medical first aid
Refer to the *Medical First Aid Guide* (MFAG), as amended.

AMMONIUM NITRATE BASED FERTILIZER UN 2071

Ammonium nitrate based fertilizers classified as UN 2071 are uniform ammonium nitrate based fertilizer mixtures of nitrogen, phosphate or potash, containing not more than 70% ammonium nitrate and not more than 0.4% total combustible organic material calculated as carbon or with not more than 45% ammonium nitrate and unrestricted combustible material. Fertilizers within these composition limits are not subject to the provisions of this schedule when shown by a trough test (see *UN Manual of Tests and Criteria*, part III, section 39)* that they are not liable to self-sustaining decomposition.

Description
Usually granules. Wholly or partly soluble in water. Hygroscopic.

Notes:

1. All nitrate ions for which there is present in the mixture a molecular equivalent of ammonium ions should be calculated as ammonium nitrate.

2. The transport of ammonium nitrate materials which are liable to self-heating sufficient to initiate a decomposition is prohibited.

3. The NPK proportions for a fertilizer should not be used as a guide to its ability to undergo self-sustaining decomposition as this depends on the chemical species present.

Characteristics

Physical properties			
Size	**Angle of repose**	**Bulk density (kg/m^3)**	**Stowage factor (m^3/t)**
1 mm to 5 mm	27° to 42°	900 to 1,200	0.83 to 1.11
Hazard classification			
Class	**Subsidiary hazard(s)**	**MHB**	**Group**
9	Not applicable		B

Hazard
This cargo may be subject to self-sustaining decomposition if heated. The temperature in such a reaction can reach 500°C. Decomposition, once initiated, may spread throughout the remainder, producing gases which are toxic. None of these cargoes are subject to an explosion hazard.
Fertilizer dust might be irritating to skin and mucous membranes.
This cargo is hygroscopic and will cake if wet.

Stowage and segregation
"Separated by a complete compartment or hold from" combustible materials (particularly liquid), bromates, chlorates, chlorites, hypochlorites, nitrites, perchlorates, permanganates, powdered metals and vegetable fibres (e.g. cotton, jute, sisal, etc.).
"Separated from" all other goods.
"Separated from" sources of heat or ignition (see also **Loading**).
Not to be stowed immediately adjacent to any tank, double bottom or pipe containing heated fuel oil unless there are means to monitor and control the temperature so that it does not exceed 50°C.
If the bulkhead between the cargo space and the engine-room is not insulated to class "A-60" standard, this cargo shall be stowed "away from" the bulkhead.

* See also section 4 of appendix 2 to this Code.

Hold cleanliness
Clean and dry as relevant to the hazards of the cargo.

Weather precautions
This cargo shall be kept as dry as practicable. This cargo shall not be handled during precipitation. During handling of this cargo, all non-working hatches of the cargo spaces into which this cargo is loaded, or to be loaded, shall be closed.

Loading
Trim in accordance with the relevant provisions required under sections 4 and 5 of this Code.

Prior to loading, the following provisions shall be complied with:

.1 All electrical equipment, other than that of approved intrinsically safe type, in the cargo spaces to be used for this cargo shall be electrically disconnected from the power source, by appropriate means other than fuse, at a point external to the space. This situation shall be maintained while the cargo is on board.

.2 Due consideration shall be given to the possible need to open hatches in case of fire to provide maximum ventilation and to apply water in an emergency and the consequent risk to the stability of the ship through fluidization of the cargo.

.3 In addition, if decomposition occurs, the residue left after decomposition may have only half the mass of the original cargo. Due consideration shall be given to the effect of the loss of mass on the stability of the ship.

During loading, the following provisions shall be complied with:

.4 Bunkering of fuel oil shall not be allowed. Pumping of fuel oil in spaces adjacent to the cargo spaces for this cargo, other than the engine-room, shall not be allowed.

.5 As far as reasonably practicable, combustible securing and protecting materials shall not be used. When wooden dunnage is necessary, only a minimum amount shall be used.

Precautions
This cargo shall only be accepted for loading when, as a result of testing in the trough test, its liability to self-sustaining decomposition shows decomposition rate not greater than 0.25 m/h. The master and officers are to note that the ship's fixed gas fire-fighting installation will be ineffective on fires involving this cargo and that applying copious amounts of water may be necessary. Pressure on the fire mains shall be maintained for fire-fighting and fire hoses shall be laid out or be in position and ready for immediate use during loading and discharging of this cargo. No welding, burning, cutting or other operations involving the use of fire, open flame, spark- or arc-producing equipment shall be carried out in the vicinity of the cargo spaces containing this cargo except in an emergency. Smoking shall not be allowed on deck and in the cargo spaces and "NO SMOKING" signs shall be displayed on deck whenever this cargo is on board. Precautions shall be taken to avoid the penetration of this cargo into other cargo spaces, bilges and other enclosed spaces. The hatches of the cargo spaces, whenever this material is on board, shall be kept free to be capable of being opened in case of an emergency.

Appropriate precautions shall be taken to protect machinery and accommodation spaces from the dust of the cargo. Bilge wells of the cargo spaces shall be protected from ingress of the cargo. Due consideration shall be given to protect equipment from the dust of the cargo. Persons who may be exposed to the dust of the cargo shall wear goggles or other equivalent dust eye-protection and dust filter masks. Those persons shall wear protective clothing, as necessary.

Ventilation
The cargo spaces carrying this cargo shall not be ventilated during voyage.

Carriage
Hatches of the cargo spaces carrying this cargo shall be weathertight to prevent the ingress of water.

The temperature of this cargo shall be monitored and recorded daily during the voyage to detect decomposition resulting in spontaneous heating and oxygen depletion.

Discharge
Bunkering of fuel oil shall not be allowed. Pumping of fuel oil in spaces adjacent to the cargo spaces for this cargo, other than the engine-room, shall not be allowed. Ammonium nitrate based fertilizers are hygroscopic and may cake in overhangs, impairing safety during discharge. If this cargo has hardened, it shall be trimmed to avoid the formation of overhangs, as necessary.

Clean-up
After discharge of this cargo, the bilge wells and the scuppers of the cargo spaces shall be checked and any blockage in the bilge wells and the scuppers shall be removed.

Emergency procedures

Special emergency equipment to be carried Protective clothing (boots, gloves, coveralls and headgear). Self-contained breathing apparatus.
Emergency procedures Wear protective clothing and self-contained breathing apparatus. **Emergency action in the event of fire** ***Fire in a cargo space containing this material:*** Open hatches to provide maximum ventilation. Ship's fixed gas fire-extinguishing installation will be inadequate. Use copious quantities of water. Flooding of the cargo space may be considered but due consideration should be given to stability. ***Fire in an adjacent cargo space:*** Open hatches to provide maximum ventilation. Heat transferred from fire in an adjacent space can cause the material to decompose with consequent evolution of toxic fumes. Dividing bulkheads should be cooled. **Medical first aid** Refer to the *Medical First Aid Guide* (MFAG), as amended.

AMMONIUM NITRATE BASED FERTILIZER (non-hazardous)*

Ammonium nitrate based fertilizers transported in conditions mentioned in this schedule are uniform mixtures containing ammonium nitrate as the main ingredient within the following composition limits:

.1 not more than 70% ammonium nitrate with other inorganic materials;

.2 not more than 80% ammonium nitrate mixed with calcium carbonate and/or dolomite and/or mineral calcium sulphate and not more than 0.4% total combustible organic material calculated as carbon;

.3 nitrogen type ammonium nitrate based fertilizers containing mixtures of ammonium nitrate and ammonium sulphate with not more than 45% ammonium nitrate and not more than 0.4% total combustible organic material calculated as carbon; and

.4 uniform ammonium nitrate based fertilizer mixtures of nitrogen, phosphate or potash, containing not more than 70% ammonium nitrate and not more than 0.4% total combustible organic material calculated as carbon or with not more than 45% ammonium nitrate and unrestricted combustible material. Fertilizers within these composition limits are not subject to the provisions of this schedule when shown by a trough test (see *UN Manual of Tests and Criteria*, part III, section 39)** that they are liable to self-sustaining decomposition or if they contain an excess of nitrate greater than 10% by mass.

Description
Crystals, granules or prills non-cohesive when dry. Wholly or partly soluble in water.

Notes:

1. All nitrate ions for which there is present in the mixture a molecular equivalent of ammonium ions should be calculated as ammonium nitrate.

2. The transport of ammonium nitrate materials which are liable to self-heating sufficient to initiate decomposition is prohibited.

3. The NPK proportions for a fertilizer should not be used as a guide to its ability to undergo self-sustaining decomposition as this depends on the chemical species present .

4. This schedule may only be used for substances that do not exhibit explosive properties of class 1 when tested in accordance with Test Series 1 and 2 of class 1 (see *UN Manual of Tests and Criteria*).

5. This schedule may only be used if the chemical or physical properties of an ammonium nitrate based fertilizer are such that, when tested, it does not meet the established defining criteria of any class.

---

* Refer to Carriage of AMMONIUM NITRATE BASED FERTILIZER (non-hazardous) (CCC.1/Circ.4).

** See also section 4 of appendix 2 to this Code.

Characteristics

Physical properties			
Size	**Angle of repose**	**Bulk density (kg/m^3)**	**Stowage factor (m^3/t)**
1 mm to 4 mm	27° to 42°	1,000 to 1,200	0.83 to 1.00
Hazard classification			
Class	**Subsidiary hazard(s)**	**MHB**	**Group**
Not applicable	Not applicable	Not applicable	C

Hazard

Even though this cargo is classified as non-hazardous, some of the properties of the ammonium nitrate based fertilizer classified in class 9 under UN 2071 are exhibited when heated strongly. When this cargo is heated strongly, it will decompose and give off toxic gases with the risk of toxic fumes in the cargo space, adjacent spaces and on deck. Monitoring of the cargo temperature may give an early indication of decomposition. Fertilizer dust might be irritating to skin and mucous membranes. It is hygroscopic cargo and will cake if wet.
This cargo is non-combustible or has a low fire risk.

Stowage and segregation

The compatibility of non-hazardous ammonium nitrate based fertilizers with other materials which may be stowed in the same cargo space shall be considered before loading.
"Separated from" sources of heat or ignition (see also **Loading**).
Not to be stowed immediately adjacent to any tank, double bottom or pipe containing heated fuel oil unless there are means to monitor and control the temperature so that it does not exceed 50°C.

Fertilizers of this type shall be stowed out of direct contact with a metal engine-room boundary. This may be done, for example, by using flame-retardant bags containing inert materials or by any equivalent arrangement approved by the competent authority. This requirement need not apply if the bulkhead is class "A-60" or to short international voyages.

Hold cleanliness

Clean and dry as relevant to the hazards of the cargo.

Weather precautions

This cargo shall be kept as dry as practicable. This cargo shall not be handled during precipitation. During handling of this cargo, all non-working hatches of the cargo spaces into which this cargo is loaded, or to be loaded, shall be closed.

Loading

Trim in accordance with the relevant provisions required under sections 4 and 5 of this Code.

Prior to loading, the following provisions shall be complied with:

.1 All electrical equipment, other than that of approved intrinsically safe type, in the cargo spaces to be used for this cargo shall be electrically disconnected from the power source, by appropriate means other than a fuse, at a point external to the space. This situation shall be maintained while the cargo is on board.

.2 Due consideration shall be given to the possible need to open hatches in case of fire to provide maximum ventilation and to apply water in an emergency and the consequent risk to the stability of the ship through fluidization of the cargo.

.3 In addition, if decomposition occurs, the residue left after decomposition may have only half the mass of the original cargo. Due consideration shall be given to the effect of the loss of mass on the stability of the ship.

During loading, the following provisions shall be complied with:

.4 Bunkering of fuel oil shall not be allowed. Pumping of fuel oil in spaces adjacent to the cargo spaces for this cargo, other than the engine-room, shall not be allowed.

Precautions
No welding, burning, cutting or other operations involving the use of fire, open flame, spark- or arc-producing equipment shall be carried out in the vicinity of the cargo spaces containing this cargo except in an emergency. The master and officers are to note that the ship's fixed gas fire-fighting installation will be ineffective on fires involving this cargo and that applying copious amounts of water may be necessary. Smoking shall not be allowed on deck and in the cargo spaces and "NO SMOKING" signs shall be displayed on deck whenever this cargo is on board. The hatches of the cargo spaces, whenever this material is on board, shall be kept free to be capable of being opened in case of an emergency.

Appropriate precautions shall be taken to protect machinery and accommodation spaces from the dust of the cargo. Bilge wells of the cargo spaces shall be protected from ingress of the cargo. Due consideration shall be given to protect equipment from the dust of the cargo. Persons who may be exposed to the dust of the cargo shall wear goggles or other equivalent dust eye-protection and dust filter masks. Those persons shall wear protective clothing, as necessary.

Ventilation
The cargo spaces carrying this cargo shall not be ventilated during voyage.

Carriage
Hatches of the cargo spaces carrying this cargo shall be weathertight to prevent the ingress of water.

Discharge
Bunkering of fuel oil shall not be allowed. Pumping of fuel oil in spaces adjacent to the cargo spaces for this cargo, other than the engine-room, shall not be allowed. Ammonium nitrate based fertilizers are hygroscopic and may cake in overhangs, impairing safety during discharge. If this cargo has hardened, it shall be trimmed to avoid the formation of overhangs, as necessary.

Clean-up
After discharge of this cargo, the bilge wells and the scuppers of the cargo spaces shall be checked and any blockage in the bilge wells and the scuppers shall be removed.

Emergency procedures

Special emergency equipment to be carried
Protective clothing (boots, gloves, coveralls and headgear).
Self-contained breathing apparatus.

Emergency procedures
Wear protective clothing and self-contained breathing apparatus.

Emergency action in the event of fire
Fire in a cargo space containing this material: Open hatches to provide maximum ventilation. Ship's fixed gas fire-extinguishing installation will be inadequate. Use copious quantities of water and isolate the source of heat, if any. Flooding of the cargo space may be considered but due consideration should be given to stability.

Fire in an adjacent cargo space: Open hatches to provide maximum ventilation. Heat transferred from fire in an adjacent space can cause the material to decompose with consequent evolution of toxic fumes. Dividing bulkheads should be cooled.

Medical first aid
Refer to the *Medical First Aid Guide* (MFAG), as amended.

AMMONIUM SULPHATE

Description
Brownish-grey to white crystals. Soluble in water. Free-flowing. Absorbs moisture. Moisture content 0.04% to 0.5%. Ammonia odour. Subject to natural loss in weight.

Characteristics

Physical properties			
Size	**Angle of repose**	**Bulk density (kg/m^3)**	**Stowage factor (m^3/t)**
2 mm to 4 mm	28° to 35°	943 to 1,052	0.95 to 1.06
Hazard classification			
Class	**Subsidiary hazard(s)**	**MHB**	**Group**
Not applicable	Not applicable	Not applicable	C

Hazard
Dust may cause skin and eye irritation. Harmful if swallowed. Even though this cargo is classified as non-hazardous, it may cause heavy corrosion of framing, side shell, bulkhead, etc., if sweating of cargo space occurs.
This cargo is hygroscopic and will cake if wet.
This cargo is non-combustible or has a low fire risk.

Stowage and segregation
No special requirements.

Hold cleanliness
Clean and dry as relevant to the hazards of the cargo.

Weather precautions
This cargo shall be kept as dry as practicable. This cargo shall not be handled during precipitation. During handling of this cargo, all non-working hatches of the cargo spaces into which this cargo is loaded, or to be loaded, shall be closed.

Loading
During loading, due consideration shall be given to minimize dust generation. Trim in accordance with the relevant provisions required under sections 4 and 5 of this Code.

Precautions
Appropriate precautions shall be taken to protect machinery and accommodation spaces from the dust of the cargo. Bilge wells of the cargo spaces shall be protected from ingress of the cargo. Due consideration shall be given to protect equipment from the dust of the cargo. Persons who may be exposed to the dust of the cargo shall wear goggles or other equivalent dust eye-protection and dust filter masks. Those persons shall wear protective clothing, as necessary.

Ventilation
The cargo spaces carrying this cargo shall not be ventilated during voyage.

Carriage
No special requirements.

Discharge
Ammonium sulphate is hygroscopic and may cake in overhangs, impairing safety during discharge. If this cargo has hardened, it shall be trimmed to avoid the formation of overhangs, as necessary.

Clean-up
After discharge of this cargo, the cargo spaces shall be thoroughly cleaned and washed out to remove all traces of the cargo and dried, except in the case that the cargo to be loaded subsequent to discharge is AMMONIUM SULPHATE.

AMORPHOUS SODIUM SILICATE LUMPS

This schedule shall apply only to amorphous sodium silicate lumps with molar ratio of silicon dioxide to sodium oxide (SiO_2/Na_2O) greater than 3.2.

Description
Lumps. Colourless to green glassy solid.

Characteristics

Physical properties			
Size	**Angle of repose**	**Bulk density (kg/m^3)**	**Stowage factor (m^3/t)**
Up to 100 mm	Not applicable	1,100 to 1,500	0.67 to 0.91
Hazard classification			
Class	**Subsidiary hazard(s)**	**MHB**	**Group**
Not applicable	Not applicable	CR	B

Hazard
Dust may cause skin and eye irritation.
This cargo is hygroscopic and will cake if wet.
This cargo is non-combustible or has a low fire risk.

Stowage and segregation
No special requirements.

Hold cleanliness
Clean and dry as relevant to the hazards of the cargo.

Weather precautions
This cargo shall be kept as dry as practicable. This cargo shall not be handled during precipitation. During handling of this cargo, all non-working hatches of the cargo spaces into which this cargo is loaded, or to be loaded, shall be closed.

Loading
During loading, due consideration shall be given to minimize dust generation. Trim in accordance with the relevant provisions required under sections 4 and 5 of this Code.

Precautions
Bilge wells shall be clean and dry and covered as appropriate to prevent ingress of the cargo.

Persons who may be exposed to the cargo shall wear protective clothing, goggles or other equivalent dust eye-protection and dust filter masks. Appropriate precautions shall be taken to protect machinery and accommodation spaces from the dust of the cargo.

Ventilation
The cargo spaces carrying this cargo shall not be ventilated during voyage.

Carriage
No special requirements.

Discharge
During discharge, due consideration shall be given to minimize dust generation. This cargo is hygroscopic and may cake in overhangs, impairing safety during discharge. If this cargo has hardened, it shall be trimmed to avoid the formation of overhangs, as necessary.

Clean-up
No special requirements.

Emergency procedures

Special emergency equipment to be carried Nil
Emergency procedures Nil **Emergency action in the event of fire** Nil **Medical first aid** Refer to the *Medical First Aid Guide* (MFAG), as amended.

ANTIMONY ORE AND RESIDUE

Description
Lead-grey mineral, subject to black tarnish.

Characteristics

Physical properties			
Size	**Angle of repose**	**Bulk density (kg/m^3)**	**Stowage factor (m^3/t)**
Not applicable	Not applicable	2,381 to 2,941	0.34 to 0.42
Hazard classification			
Class	**Subsidiary hazard(s)**	**MHB**	**Group**
Not applicable	Not applicable	Not applicable	C

Hazard
If involved in a fire, dangerous fumes of antimony and sulphur oxides can evolve.
This cargo is non-combustible or has a low fire risk.

Stowage and segregation
No special requirements.

Hold cleanliness
No special requirements.

Weather precautions
No special requirements.

Loading
Trim in accordance with the relevant provisions required under sections 4 and 5 of this Code.

As the density of the cargo is extremely high, the tank top may be overstressed unless the cargo is evenly spread across the tank top to equalize the weight distribution. Due consideration shall be given to ensure that the tank top is not overstressed during the voyage and during loading by a pile of the cargo.

Precautions
Appropriate precautions shall be taken to protect machinery and accommodation spaces from the dust of the cargo. Bilge wells of the cargo spaces shall be protected from ingress of the cargo. Due consideration shall be given to protect equipment from the dust of the cargo. Persons who may be exposed to the dust of the cargo shall wear protective clothing, goggles or other equivalent dust eye-protection and dust filter masks, as necessary.

Ventilation
No special requirements.

Carriage
No special requirements.

Discharge
No special requirements.

Clean-up
No special requirements.

BARIUM NITRATE UN 1446

Description
Glossy white crystals or powder. Soluble in water.

Characteristics

Physical properties			
Size	**Angle of repose**	**Bulk density (kg/m^3)**	**Stowage factor (m^3/t)**
Fine powder	Not applicable	-	-
Hazard classification			
Class	**Subsidiary hazard(s)**	**MHB**	**Group**
5.1	6.1		B

Hazard
Toxic if swallowed or by dust inhalation. If involved in a fire mixture with combustible materials is readily ignited and may burn fiercely.

Stowage and segregation
"Separated from" foodstuffs.

Hold cleanliness
Clean and dry as relevant to the hazards of the cargo.

Weather precautions
No special requirements**.**

Loading
Trim in accordance with the relevant provisions required under sections 4 and 5 of this Code.

Precautions
Appropriate precautions shall be taken to protect machinery and accommodation spaces from the dust of the cargo. Bilge wells of the cargo spaces shall be protected from ingress of the cargo. Due consideration shall be given to protect equipment from the dust of the cargo. Persons who may be exposed to the dust of the cargo shall wear goggles or other equivalent dust eye-protection and dust filter masks. Those persons shall wear protective clothing, as necessary.

Bilge wells shall be clean, dry and covered as appropriate, to prevent ingress of the cargo. The master and officers are to note that the ship's fixed gas fire-fighting installation will be ineffective on fires involving this cargo and that applying copious amounts of water may be necessary.

Ventilation
Surface ventilation only, either natural or mechanical, shall be conducted, as necessary, during the voyage for this cargo.

Carriage
No special requirements.

Discharge
No special requirements.

Clean-up
No special requirements.

Emergency procedures

Special emergency equipment to be carried Protective clothing (boots, gloves, overalls and headgear). Self-contained breathing apparatus. Spray nozzles.
Emergency procedures Wear protective clothing and self-contained breathing apparatus. **Emergency action in the event of fire** Use copious amounts of water, which is best applied in the form of a spray to avoid disturbing the surface of the material. The material may fuse or melt, in which condition application of water may result in excessive scattering of molten materials. Exclusion of air or the use of CO_2 will not control the fire. Due consideration should be given to the stability of the ship due to the effect of accumulated water. **Medical first aid** Refer to the *Medical First Aid Guide* (MFAG), as amended.

BARYTES

Description
Crystalline ore mineral. A sulphate of barium. Moisture 1% to 6%.

Characteristics

Physical properties			
Size	**Angle of repose**	**Bulk density (kg/m^3)**	**Stowage factor (m^3/t)**
80% lumps: 6.4 mm to 101.6 mm 20% fines: less than 6.4 mm	Not applicable	2,941	0.34
Hazard classification			
Class	**Subsidiary hazard(s)**	**MHB**	**Group**
Not applicable	Not applicable	Not applicable	C

Hazard
No special hazards.
This cargo is non-combustible or has a low fire risk.

Stowage and segregation
No special requirements.

Hold cleanliness
No special requirements.

Weather precautions
No special requirements.

Loading
Trim in accordance with the relevant provisions required under sections 4 and 5 of this Code.

As the density of the cargo is extremely high, the tank top may be overstressed unless the cargo is evenly spread across the tank top to equalize the weight distribution. Due consideration shall be given to ensure that the tank top is not overstressed during the voyage and during loading by a pile of the cargo.

Precautions
Appropriate precautions shall be taken to protect machinery and accommodation spaces from the dust of the cargo. Bilge wells of the cargo spaces shall be protected from ingress of the cargo. Due consideration shall be given to protect equipment from the dust of the cargo. Persons who may be exposed to the dust of the cargo shall wear protective clothing, goggles or other equivalent dust eye-protection and dust filter masks, as necessary.

Ventilation
No special requirements.

Carriage
No special requirements.

Discharge
No special requirements.

Clean-up
No special requirements.

BAUXITE

The provisions of this schedule shall apply to bauxite cargoes:

.1 containing either:

.1 30% or less of fine particles less than 1 mm ($D_{30} \geqslant 1$ mm); or

.2 40% or less of particles less than 2.5 mm ($D_{40} \geqslant 2.5$ mm); or

.3 both;

or

.2 where the shipper provides the master with a certificate, in accordance with the result of the test approved by the competent authority of the port of loading,* stating that the moisture of the cargo freely drains from the cargo so that the degree of saturation is not liable to reach 70%.

Description
A reddish-brown to brownish-yellow clay-like and earthy mineral. Insoluble in water.

Characteristics

Physical properties			
Size	**Angle of repose**	**Bulk density (kg/m^3)**	**Stowage factor (m^3/t)**
Typically up to 500 mm	Not applicable	1,100 to 2,000	0.50 to 0.91
Hazard classification			
Class	**Subsidiary hazard(s)**	**MHB**	**Group**
Not applicable	Not applicable	Not applicable	C

Hazard
No special hazards.
This cargo is non-combustible or has a low fire risk.

Stowage and segregation
No special requirements.

Hold cleanliness
No special requirements.

Weather precautions
No special requirements.

* Refer to 1.6 of appendix 2 to this Code.

Loading
Trim in accordance with the relevant provisions required under sections 4 and 5 of this Code. When the stowage factor of this cargo is equal to or less than 0.56 m^3/t, the tank top may be overstressed unless the cargo is evenly spread across the tank top to equalize the weight distribution. Due consideration shall be given to ensure that the tank top is not overstressed during the voyage and during loading by a pile of the cargo.

Precautions
Bilge wells shall be clean, dry and covered as appropriate, to prevent ingress of the cargo. The bilge system of a cargo space to which this cargo is to be loaded shall be tested to ensure it is working.

Ventilation
No special requirements.

Carriage
No special requirements.

Discharge
No special requirements.

Clean-up
No special requirements.

BAUXITE FINES

The provisions of this schedule shall apply to bauxite cargoes containing both:

.1 more than 30% of fine particles less than 1 mm (D_{30} < 1 mm); and

.2 more than 40% of particles less than 2.5 mm (D_{40} < 2.5 mm).

Notwithstanding the above provision, Bauxite cargo meeting the above criterion may be carried as a group C cargo in accordance with the provisions of the individual schedule for BAUXITE where the shipper provides the master with a certificate, in accordance with the result of the test approved by the competent authority of the port of loading,* stating that the moisture of the cargo freely drains from the cargo so that the degree of saturation is not liable to reach 70%.

Description
A reddish-brown to brownish-yellow clay-like and earthy mineral. Insoluble in water.

Characteristics

Physical properties			
Size	**Angle of repose**	**Bulk density (kg/m^3)**	**Stowage factor (m^3/t)**
More than 30% of fine particles less than 1 mm and more than 40% of particles less than 2.5 mm	Not applicable	1,100 to 2,000	0.50 to 0.91
Hazard classification			
Class	**Subsidiary hazard(s)**	**MHB**	**Group**
Not applicable	Not applicable	Not applicable	A

Hazard
This cargo may liquefy if shipped at a moisture content in excess of its transportable moisture limit (TML). See sections 7 and 8 of this Code.

This cargo may suffer instability due to moisture content resulting in dynamic separation and formation of a liquid slurry (water and fine solids) above the solid material, resulting in a free surface effect which may significantly affect the ship's stability. This cargo is not liable to undergo dynamic separation when the cargo is shipped below its TML.
This cargo is non-combustible or has a low fire risk.

Stowage and segregation
No special requirements.

Hold cleanliness
No special requirements.

Weather precautions
When a cargo is carried in a ship other than a ship complying with the requirements in 7.3.2 of this Code, the following provisions shall be complied with:

* Refer to 1.6 of appendix 2 to this Code.

.1 the moisture content of the cargo shall be kept less than its TML during loading operations and the voyage;

.2 unless expressly provided otherwise in this individual schedule, the cargo shall not be handled during precipitation;

.3 unless expressly provided otherwise in this individual schedule, during handling of the cargo, all non-working hatches of the cargo spaces into which the cargo is loaded, or to be loaded, shall be closed;

.4 the cargo may be handled during precipitation under the conditions stated in the procedures required in 4.3.3 of this Code; and

.5 the cargo in a cargo space may be discharged during precipitation provided that the total amount of the cargo in the cargo space is to be discharged in the port.

Loading
Trim in accordance with the relevant provisions required under sections 4 and 5 of this Code.

When the stowage factor of this cargo is equal to or less than 0.56 m^3/t, the tank top may be overstressed unless the cargo is evenly spread across the tank top to equalize the weight distribution. Due consideration shall be given to ensure that the tank top is not overstressed during the voyage and during loading by a pile of the cargo.

Precautions
Bilge wells shall be clean, dry and covered as appropriate, to prevent ingress of the cargo. The bilge system of a cargo space to which this cargo is to be loaded shall be tested to ensure it is working.

Ventilation
No special requirements.

Carriage
The appearance of the surface of this cargo shall be checked regularly, including at least daily visual inspections where condition permits, during the voyage. If free water or a liquid slurry above the cargo or fluid state of the cargo is observed, including the flattening of the cargo, during voyage, the master shall take appropriate actions to prevent cargo shifting, loss of stability due to free surface effect and potential capsize of the ship, and give consideration to seeking emergency entry into a place of refuge. Cargo hold bilges shall be sounded at regular intervals and pumped out, as necessary.

An atypical motion of the ship (wobbling) may also be indicative of cargo instability and the master shall consider appropriate action.

Discharge
No special requirements.

Clean-up
No special requirements.

BIOSLUDGE

Description
Heat-dried activated sludge. Very fine granular product. Moisture: 3% to 5%. Black speckled colour.

Characteristics

Physical properties			
Size	**Angle of repose**	**Bulk density (kg/m^3)**	**Stowage factor (m^3/t)**
Not applicable	Not applicable	654	1.53
Hazard classification			
Class	**Subsidiary hazard(s)**	**MHB**	**Group**
Not applicable	Not applicable	Not applicable	C

Hazard
No special hazards.
This cargo is non-combustible or has a low fire risk.

Stowage and segregation
No special requirements.

Hold cleanliness
No special requirements.

Weather precautions
No special requirements.

Loading
Trim in accordance with the relevant provisions required under sections 4 and 5 of this Code.

Precautions
Appropriate precautions shall be taken to protect machinery and accommodation spaces from the dust of the cargo. Bilge wells of the cargo spaces shall be protected from ingress of the cargo. Due consideration shall be given to protect equipment from the dust of the cargo. Persons who may be exposed to the dust of the cargo shall wear protective clothing, goggles or other equivalent dust eye-protection and dust filter masks, as necessary.

Ventilation
No special requirements.

Carriage
No special requirements.

Discharge
No special requirements.

Clean-up
No special requirements.

BORAX (PENTAHYDRATE CRUDE)

Description
A chemical compound of boracic acid and soda. Free-flowing powder or granules. Grey colour. Dusty.

Characteristics

Physical properties			
Size	**Angle of repose**	**Bulk density (kg/m^3)**	**Stowage factor (m^3/t)**
Up to 2.36 mm	Not applicable	1,087	0.92
Hazard classification			
Class	**Subsidiary hazard(s)**	**MHB**	**Group**
Not applicable	Not applicable	Not applicable	C

Hazard
No special hazards.
This cargo is hygroscopic and will cake if wet.
This cargo is non-combustible or has a low fire risk.

Stowage and segregation
No special requirements.

Hold cleanliness
No special requirements.

Weather precautions
This cargo shall be kept as dry as practicable. This cargo shall not be handled during precipitation. During handling of this cargo, all non-working hatches of the cargo spaces into which this cargo is loaded, or to be loaded, shall be closed.

Loading
Trim in accordance with the relevant provisions required under sections 4 and 5 of this Code.

Precautions
Appropriate precautions shall be taken to protect machinery and accommodation spaces from the dust of the cargo. Bilge wells of the cargo spaces shall be protected from ingress of the cargo. Due consideration shall be given to protect equipment from the dust of the cargo. Persons who may be exposed to the dust of the cargo shall wear protective clothing, goggles or other equivalent dust eye-protection and dust filter masks, as necessary.

Ventilation
No special requirements.

Carriage
No special requirements.

Discharge
Borax (pentahydrate crude) is hygroscopic and may cake in overhangs, impairing safety during discharge. If this cargo has hardened, it shall be trimmed to avoid the formation of overhangs, as necessary.

Clean-up
No special requirements.

BORAX, ANHYDROUS
(crude or refined)

Description
Crude is normally of yellow-white appearance. When highly refined, becomes white crystalline. Dusty and hygroscopic.

Characteristics

Physical properties			
Size	**Angle of repose**	**Bulk density (kg/m^3)**	**Stowage factor (m^3/t)**
Granules less than 1.4 mm	35°	1,282	0.78
Hazard classification			
Class	**Subsidiary hazard(s)**	**MHB**	**Group**
Not applicable	Not applicable	Not applicable	C

Hazard
Dust is very abrasive and irritating, but not toxic, if inhaled.
This cargo is hygroscopic and will cake if wet.
This cargo is non-combustible or has a low fire risk.

Stowage and segregation
No special requirements.

Hold cleanliness
No special requirements.

Weather precautions
No special requirements.

Loading
Trim in accordance with the relevant provisions required under sections 4 and 5 of this Code.

Precautions
Appropriate precautions shall be taken to protect machinery and accommodation spaces from the dust of the cargo. Bilge wells of the cargo spaces shall be protected from ingress of the cargo. Due consideration shall be given to protect equipment from the dust of the cargo. Persons who may be exposed to the dust of the cargo shall wear goggles or other equivalent dust eye-protection and dust filter masks. Those persons shall wear protective clothing, as necessary.

Ventilation
No special requirements.

Carriage
No special requirements.

Discharge
Borax anhydrous (crude or refined) is hygroscopic and may cake in overhangs, impairing safety during discharge. If this cargo has hardened, it shall be trimmed to avoid the formation of overhangs, as necessary.

Clean-up
No special requirements.

BORIC ACID

Description
A white free-flowing crystalline powder. Odourless and dry with not more than 1.0% moisture. Water soluble.

Characteristics

Physical properties			
Size	**Angle of repose**	**Bulk density (kg/m^3)**	**Stowage factor (m^3/t)**
Fine crystalline powder, dry	Not applicable	544 to 862	1.16 to 1.84
Hazard classification			
Class	**Subsidiary hazard(s)**	**MHB**	**Group**
Not applicable	Not applicable	TX and/or CR	B

Hazard
Mild irritation effects to nose and throat may occur from inhalation. May cause irritation to skin. May cause long-term health effects.
This cargo is hygroscopic and will cake if wet.
This cargo is non-combustible or has a low fire risk.

Stowage and segregation
"Separated from" metal hydrides and alkali metals.

Hold cleanliness
Clean and dry as relevant to the hazards of the cargo.

Weather precautions
This cargo shall be kept as dry as practicable. This cargo shall not be handled during precipitation. During handling of this cargo, all non-working hatches of the cargo spaces into which this cargo is loaded, or to be loaded, shall be closed.

Loading
Trim in accordance with the relevant provisions required under sections 4 and 5 of this Code.

Precautions
Persons who may be exposed to the dust of the cargo shall wear protective clothing, goggles or other equivalent dust eye-protection and dust filter masks, as necessary.

Ventilation
No special requirements.

Carriage
No special requirements.

Discharge
No discharge operations during precipitation.

Boric acid is hygroscopic and may cake in overhangs, impairing safety during discharge. If this cargo has hardened, it shall be trimmed to avoid the formation of overhangs, as necessary.

Clean-up
Thorough dry cleaning to be carried out prior to washing all cargo spaces.

Emergency procedures

Special emergency equipment to be carried Nil
Emergency procedures Nil **Emergency action in the event of fire** Nil **Medical first aid** Refer to the *Medical First Aid Guide* (MFAG), as amended.

BROWN COAL BRIQUETTES
(*see appendix to this schedule*)

Description
Brown coal (lignite) briquettes are manufactured by pressing dried brown coal particles into compressed blocks.

Characteristics

Physical properties			
Size	**Angle of repose**	**Bulk density (kg/m^3)**	**Stowage factor (m^3/t)**
Mainly up to 50 mm	Not applicable	750	1.34
Hazard classification			
Class	**Subsidiary hazard(s)**	**MHB**	**Group**
Not applicable	Not applicable	CB and/or SH	B

Hazard
This cargo is easily ignited, is liable to heat spontaneously, may ignite spontaneously and may deplete oxygen in the cargo space.

Stowage and segregation
Refer to the appendix to this schedule.

Hold cleanliness
Clean and dry as relevant to the hazards of the cargo. Previous cargo battens shall be removed from the cargo spaces.

Weather precautions
No special requirements.

Loading
Refer to the appendix to this schedule.

Precautions
Appropriate precautions shall be taken to protect machinery and accommodation spaces from the dust of the cargo. Bilge wells of the cargo spaces shall be protected from ingress of the cargo. Due consideration shall be given to protect equipment from the dust of the cargo. Persons who may be exposed to the dust of the cargo shall wear protective clothing, goggles or other equivalent dust eye-protection and dust filter masks, as necessary.

Ventilation
The cargo spaces carrying this cargo shall not be ventilated during voyage. Refer to the appendix to this schedule.

Carriage
Refer to the appendix to this schedule.

Discharge
Refer to the appendix to this schedule.

Clean-up
After discharge of this cargo, the bilge wells and the scuppers of the cargo spaces shall be checked and any blockage in the bilge wells and the scuppers shall be removed.

Emergency procedures

Special emergency equipment to be carried Nil
Emergency procedures Nil **Emergency action in the event of fire** Batten down. Exclusion of air may be sufficient to control fire. **Do not use water**. Seek expert advice and consider heading for the nearest suitable port. **Medical first aid** Refer to the *Medical First Aid Guide* (MFAG), as amended.

Remarks

The use of CO_2 or inert gas, if available, should be withheld until fire is apparent.

APPENDIX

BROWN COAL BRIQUETTES

Hazard

1 This cargo is easily ignited, liable to heat spontaneously and deplete oxygen in the cargo space.

2 This cargo is subject to oxidation, leading to depletion of oxygen and an increase in carbon dioxide in the cargo space (see also section 3).

3 This cargo is liable to heat spontaneously and may ignite spontaneously in the cargo space. When spontaneous heating occurs, flammable and toxic gases, including carbon monoxide, may be produced. Carbon monoxide is an odourless gas, slightly lighter than air, and has flammable limits in air of 12% to 75% by volume. It is toxic by inhalation, with an affinity for blood haemoglobin over 200 times that of oxygen. The recommended threshold limit value (TLV) for carbon monoxide exposure is 50 ppm.

Stowage and segregation

1 Boundaries of cargo spaces where these cargoes are carried shall be resistant to fire and liquids.

2 This cargo shall be "separated from" goods of classes 1 (division 1.4), 2, 3, 4 and 5 in packaged form (see IMDG Code) and "separated from" solid bulk material of classes 4 and 5.1.

3 Stowage of goods of class 5.1 in packaged form or solid bulk materials of class 5.1 above or below this cargo shall be prohibited.

4 This cargo shall be "separated longitudinally by an intervening complete compartment or hold from" goods of class 1 other than division 1.4.

5 This cargo shall not be stowed adjacent to hot areas.*

Note: For interpretation of these terms, see section 9.

Loading

1 Prior to loading, the shipper, or their appointed agent, shall provide in writing to the master the characteristics of the cargo and the recommended safe handling procedures for loading and transport of the cargo. As a minimum, the cargo's contract specifications for moisture content, sulphur content and size shall be stated.

2 This cargo shall be stored for 7 days prior to loading. This substantially reduces the risk of spontaneous combustion in subsequent transport, storage and handling.

3 Before loading this cargo, the master shall ensure the following:

.1 weather deck enclosures to the cargo space have been inspected to ensure their integrity. Such closures are closed and sealed;

* Refer to Interpretation of stowage and segregation requirements for brown coal briquettes and coal related to "hot areas" in the IMSBC Code (MSC.1/Circ.1351/Rev.1).

.2 all electrical cables and components situated in cargo spaces and adjacent enclosed spaces are free from defects. Such cables and electrical components are safe to be used in a flammable and/or dusty atmosphere or positively isolated. The provisions of this clause need not apply to engine-rooms where the engine-room is separated from the cargo space by a gastight bulkhead with no direct access.

4 Smoking and the use of naked flames shall not be permitted in the cargo areas and adjacent spaces and appropriate warning notices shall be posted in conspicuous places. Burning, cutting, chipping, welding or other sources of ignition shall not be permitted in the vicinity of cargo spaces or in other adjacent spaces.

5 This cargo shall not be dropped more than one metre during loading to minimize the production of dust and fines.

6 Individual cargo spaces shall be loaded without interruption, where possible. Hot spots may develop in a cargo space that has been kept open for more than six days (or less in weather over 30°C).

7 Prior to departure, the master shall be satisfied that the surface of the material has been trimmed reasonably level to the boundaries of the cargo space to avoid the formation of gas pockets and to prevent air from permeating the body of the briquettes. Casing leading into the cargo space shall be adequately sealed. The shipper shall ensure that the master receives the necessary cooperation from the loading terminal.

8 Individual cargo spaces shall be closed and sealed as soon as practicable after the cargo has been loaded into each cargo space.

Precautions

1 The ship shall be suitably fitted and carry on board appropriate instruments for measuring the following without requiring entry into the cargo space:

.1 concentration of methane in the atmosphere above the cargo;

.2 concentration of oxygen in the atmosphere above the cargo;

.3 concentration of carbon monoxide in the atmosphere above the cargo;

.4 pH value of cargo hold bilge samples.

These instruments shall be regularly serviced and calibrated. Ship personnel shall be trained in the use of such instruments. Details of gas measurement procedures are given at the end of this appendix.

2. It is recommended that means be provided for monitoring the temperature of the cargo in the range of 0°C to 100°C to enable the measurement of temperature of the cargo during the voyage without requiring entry into the cargo space.

Carriage

1 As far as practicable, any gases which may be emitted from the cargo shall not be allowed to accumulate in adjacent enclosed spaces, such as store-rooms, carpenter's shop, passageways, tunnels, etc. Such spaces shall be adequately ventilated and regularly monitored for methane, oxygen and carbon monoxide.

2 Under no circumstances, except in emergency, shall the hatches be opened or the cargo space be ventilated or entered during the voyage.

3 The atmosphere in the space above the cargo in each cargo space shall be regularly monitored for the concentrations of methane, oxygen and carbon monoxide.

4 The frequency of the monitoring shall be determined based upon the information provided by the shipper and the information obtained through the analysis of the atmosphere in the cargo space. The monitoring shall be conducted at least daily and as close as practical to the same time of day. The results of monitoring shall be recorded. The shipper may request more frequent monitoring, particularly if there is evidence of significant self-heating during the voyage.

5 The following issues shall be taken into account:

.1 The oxygen level in the sealed cargo space will fall from an initial 21% over a period of days to stabilize at levels of the order of 6 to 15%. If the oxygen level does not fall below 20%, or rapidly increases after an initial fall, it is possible that the cargo space is inadequately sealed and is at risk of spontaneous combustion.

.2 Carbon monoxide levels will build up to concentrations which fluctuate in the 200 to 2,000 parts per million (ppm) range in a safe, well-sealed cargo space. A rapid increase of approximately 1,000 ppm in carbon monoxide levels in this cargo over a 24-hour period is a possible indicator of spontaneous combustion, particularly if accompanied by an increase in methane levels.

.3 The methane composition in briquette cargo is normally low, less than 5 ppm and does not constitute a hazard. However, a sudden and continuing rise in methane levels, to concentrations above 10 ppm, is an indicator of the occurrence of spontaneous combustion in the hold.

.4 The temperature in this cargo in a well-sealed cargo space normally remains at 5 to 10°C above seawater temperature, the increase being due to normal diurnal breathing of small quantities of air into the cargo space. Checking of the cargo space seals to minimize air leakage is essential. A rapid increase in temperature of approximately 20°C over 24 hours is evidence of spontaneous combustion.

6 Regular hold bilge testing shall be systematically carried out. If the pH monitoring indicates that a corrosion risk exists, the master shall ensure that all bilges are kept dry during the voyage in order to avoid possible accumulation of acids on tank tops and in the bilge system.

7 When the behaviour of the cargo during the voyage differs from that specified in the cargo information, the master shall report such differences to the shipper. Such reports will enable the shipper to maintain records on the behaviour of this cargo, so that the information being provided to the master can be reviewed in the light of the transport experience.

8 When the master is concerned that the cargo is showing any signs of self-heating or spontaneous combustion, such as an increase in the concentration of methane or carbon monoxide or an increase in temperature, as described above, the following actions shall be taken:

.1 Consult with the ship's agent at the loading port. The company's* designated person ashore shall be advised immediately.

.2 Check the seal of the cargo space and re-seal the cargo space, as necessary.

.3 Do not enter the cargo space and do not open the hatches, unless the master considers access is necessary for the safety of the ship or safety of life. When any ship's personnel have entered into a cargo space, re-seal the cargo space immediately after the personnel vacate the cargo space.

.4 Increase the frequency of monitoring the gas composition, and temperature when practicable, of the cargo.

.5 Send the following information, as soon as possible, to the ship's owner or agent at the loading port to obtain expert advice:

.1 the number of cargo spaces involved;

.2 monitoring results of the carbon monoxide, methane and oxygen concentrations;

.3 if available, temperature of the cargo, location and method used to obtain results;

.4 the time the gas analyses were taken (monitoring routine);

.5 the quantity of the cargo in the cargo space(s) involved;

.6 the description of the cargo as per the shipper's declaration, and any special precautions indicated on the declaration;

.7 the date of loading, and Estimated Time of Arrival (ETA) at the intended discharge port (which shall be specified); and

.8 any other comments or observations the master may consider relevant.

Discharge

Prior to, and during, discharge:

1 The cargo space shall be kept closed until just before the commencement of discharge of that space. The cargo may be sprayed with a fine water spray to reduce dust.

* Refer to SOLAS regulation IX/1.2.

2. Personnel shall not enter the cargo space without having tested the atmosphere above the cargo. The personnel entering into a cargo space in which the atmosphere contains oxygen levels below 21% shall wear self-contained breathing apparatus.** Carbon dioxide and carbon monoxide gas levels shall also be tested prior to entry into the cargo spaces. The recommended threshold limit value (TLV) for carbon monoxide is 50 ppm.

3. During discharge, attention shall be given to the cargo for signs of hot spots (i.e. steaming). If a hot spot is detected, the area shall be sprayed with fine water spray and the hot spot shall be removed immediately to prevent spreading. The hot spot cargo shall be spread out on the wharf away from the remainder of the cargo.

4. Prior to suspending the discharge of this cargo for more than eight hours, the hatch covers and all other ventilation for the cargo space shall be closed.

PROCEDURES FOR GAS MONITORING OF BROWN COAL BRIQUETTE CARGOES

1 Observations

1.1 Carbon monoxide monitoring, when conducted in accordance with the following procedures, will provide a reliable early indication of self-heating within this cargo. This allows preventive action to be considered without delay. A sudden rapid rise in carbon monoxide detected within a cargo space, particularly if accompanied by an increase in methane levels, is a conclusive indication that self-heating is taking place.

1.2 All vessels engaged in the carriage of this cargo shall carry on board an instrument for measuring methane, oxygen and carbon monoxide gas concentrations, to enable the monitoring of the atmosphere within the cargo space. This instrument shall be regularly serviced and calibrated in accordance with the manufacturer's instructions. Care shall be exercised in interpreting methane measurements carried out in the low oxygen concentrations often found in unventilated cargo holds. The catalytic sensors normally used for the detection of methane rely on the presence of sufficient oxygen for accurate measurement. This phenomenon does not affect the measurement of carbon monoxide, or measurement of methane by infrared sensor. Further guidance may be obtained from the instrument manufacturer.

2 Sampling and measurement procedure

2.1 Equipment

2.1.1 An instrument which is capable of measuring methane, oxygen and carbon monoxide concentrations shall be provided on board a ship carrying this cargo. The instrument shall be fitted with an aspirator, flexible connection and a length of spark-proof metal tubing to enable a representative sample to be obtained from within the square of the hatch.

2.1.2 When recommended by the manufacturer, a suitable filter shall be used to protect the instrument against the ingress of moisture. The presence of even a small amount of water will compromise the accuracy of the measurement.

** Refer to *Revised recommendations for entering enclosed spaces aboard ships* (resolution A.1050(27)).

2.2 Siting of sampling points

2.2.1 In order to obtain meaningful information about the behaviour of this cargo in a cargo space, gas measurements shall be made via one sample point per cargo space. To ensure flexibility of measurement in adverse weather, however, two sample points shall be provided per cargo space, one on the port side and one on the starboard side of the hatch cover or hatch coaming (refer to diagram of gas sampling point). Measurement from either of these locations is satisfactory.

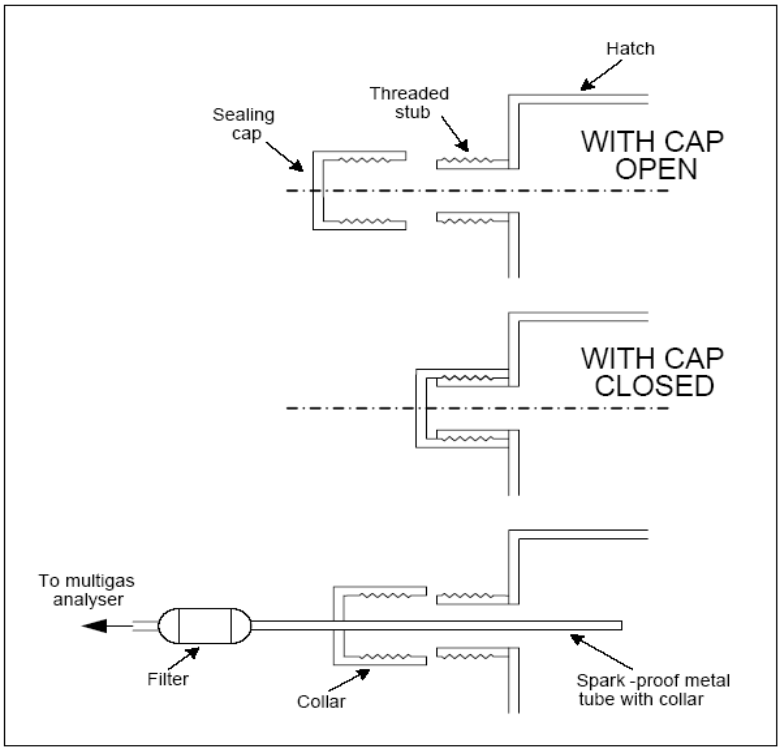

Diagram of gas sampling point

2.2.2 Each sample point shall comprise a hole of diameter approximately 12 mm positioned as near to the top of the hatch coaming as possible. It shall be sealed with a sealing cap to prevent ingress of water and air. It is essential this cap be securely replaced after each measurement to maintain a tight seal.

2.2.3 The provision of any sample point shall not compromise the seaworthiness of the vessel.

2.3 Measurement

The explanation on procedures for measurement is as follows:

.1 remove the sealing cap, insert the rigid tube into the sampling point and tighten the integral cap to ensure an adequate seal;

.2 connect the instrument to the sampling tube;

.3 draw a sample of the atmosphere through the tube, using the aspirator, until steady readings are obtained;

.4 log the results on a form which records cargo hold, date and time for each measurement; and

.5 put back the sealing cap.

BRUCITE

Description
White to grey particles. The main component is magnesium hydroxide. The cargo is mined from a natural pit and then crushed into particles.

Characteristics

Physical properties			
Size	**Angle of repose**	**Bulk density (kg/m^3)**	**Stowage factor (m^3/t)**
5 mm to 40 mm	Various	1,100 to 1,300	0.77 to 0.91
Hazard classification			
Class	**Subsidiary hazard(s)**	**MHB**	**Group**
Not applicable	Not applicable	Not applicable	C

Hazard
No special hazards.
This cargo is non-combustible or has a low fire risk.

Stowage and segregation
No special requirements.

Hold cleanliness
No special requirements.

Weather precautions
No special requirements.

Loading
Trim in accordance with the relevant provisions required under sections 4 and 5 of this Code.

Precautions
No special requirements.

Ventilation
No special requirements.

Carriage
No special requirements.

Discharge
No special requirements.

Clean-up
No special requirements.

CALCIUM FLUORIDE, CALCIUM SULPHATE, CALCIUM CARBONATE MIXTURE

Description
The cargo contains 35% to 55% calcium fluoride, 18% to 30% calcium sulphate and 10% to 20% calcium carbonate.

This cargo is a fine white-light grey powder aggregated in lumps, and is transported as filter cakes. This cargo is insoluble in water.

Characteristics

Physical properties			
Size	**Angle of repose**	**Bulk density (kg/m^3)**	**Stowage factor (m^3/t)**
Up to 50 mm	Not applicable	1,100 to 2,500	0.40 to 0.91
Hazard classification			
Class	**Subsidiary hazard(s)**	**MHB**	**Group**
Not applicable	Not applicable	Not applicable	A

Hazard
This cargo may liquefy if shipped at a moisture content in excess of its transportable moisture limit (TML). See sections 7 and 8 of this Code.
This cargo is non-combustible or has a low fire risk.

Stowage and segregation
"Separated from" foodstuffs and all class 8 acids.

Hold cleanliness
No special requirements.

Weather precautions
When a cargo is carried in a ship other than a ship complying with the requirements in 7.3.2 of this Code, the following provisions shall be complied with:

.1 the moisture content of the cargo shall be kept less than its TML during loading operations and the voyage;

.2 unless expressly provided otherwise in this individual schedule, the cargo shall not be handled during precipitation;

.3 unless expressly provided otherwise in this individual schedule, during handling of the cargo, all non-working hatches of the cargo spaces into which the cargo is loaded, or to be loaded, shall be closed;

.4 the cargo may be handled during precipitation under the conditions stated in the procedures required in subsection 4.3.3 of this Code; and

.5 the cargo in a cargo space may be discharged during precipitation provided that the total amount of the cargo in the cargo space is to be discharged in the port.

Loading
Trim in accordance with the relevant provisions required under sections 4 and 5 of this Code. When the stowage factor of this cargo is equal to or less than 0.56 m^3/t, the tank top may be overstressed unless the cargo is evenly spread across the tank top to equalize the weight distribution. Due consideration shall be given to ensure that the tank top is not overstressed during the voyage and during loading by a pile of the cargo.

Precautions
Appropriate precautions shall be taken to protect machinery and accommodation spaces from the dust of the cargo. Bilge wells of the cargo spaces shall be protected from ingress of the cargo. Due consideration shall be given to protect equipment from the dust of the cargo. Persons who may be exposed to the dust of the cargo shall wear goggles or other equivalent dust eye-protection and dust filter masks. Those persons shall wear protective clothing, as necessary.

Ventilation
No special requirements.

Carriage
The appearance of the surface of this cargo shall be checked regularly during the voyage. If free water above the cargo or fluid state of the cargo is observed during the voyage, the master shall take appropriate actions to prevent cargo shifting and potential capsize of the ship, and give consideration to seeking emergency entry into a place of refuge.

Discharge
No special requirements.

Clean-up
No special requirements.

CALCIUM NITRATE UN 1454

The provisions of this Code shall not apply to the commercial grades of calcium nitrate fertilizers consisting mainly of a double salt (calcium nitrate and ammonium nitrate) and containing not more than 10% ammonium nitrate and at least 12% water of crystallization.

Description
White deliquescent solid, soluble in water.

Characteristics

Physical properties			
Size	**Angle of repose**	**Bulk density (kg/m^3)**	**Stowage factor (m^3/t)**
Not applicable	Not applicable	893 to 1,099	0.91 to 1.12
Hazard classification			
Class	**Subsidiary hazard(s)**	**MHB**	**Group**
5.1	Not applicable		B

Hazard
Non-combustible materials. If involved in a fire, will greatly intensify the burning of combustible materials. Although non-combustible, mixtures with combustible material are easily ignited and may burn fiercely.
This cargo is hygroscopic and will cake if wet.
This cargo is harmful if swallowed.

Stowage and segregation
"Separated from" foodstuffs.

Hold cleanliness
Clean and dry as relevant to the hazards of the cargo.

Weather precautions
This cargo shall be kept as dry as practicable. This cargo shall not be handled during precipitation. During handling of this cargo, all non-working hatches of the cargo spaces into which this cargo is loaded, or to be loaded, shall be closed.

Loading
Appropriate measures shall be taken to prevent the cargo from contact with combustible materials.

Trim in accordance with the relevant provisions required under sections 4 and 5 of this Code.

Precautions
Bilge wells shall be clean, dry and covered as appropriate, to prevent ingress of the cargo. The master and officers are to note that the ship's fixed gas fire-fighting installation will be ineffective on fires involving this cargo and that applying copious amounts of water may be necessary.

Ventilation
The cargo spaces carrying this cargo shall not be ventilated during voyage.

Carriage
No special requirements.

Discharge
Calcium nitrate is hygroscopic and may cake in overhangs, impairing safety during discharge. If this cargo has hardened, it shall be trimmed to avoid the formation of overhangs, as necessary.

Clean-up
No special requirements.

Emergency procedures

Special emergency equipment to be carried Protective clothing (gloves, boots, coveralls and headgear). Self-contained breathing apparatus. Spray nozzles.
Emergency procedures Wear protective clothing and self-contained breathing apparatus. **Emergency action in the event of fire** Use copious quantities of water, which is best applied in the form of a spray to avoid disturbing the surface of the material. The material may fuse or melt, in which condition application of water may result in extensive scattering of the molten materials. Exclusion of air or the use of CO_2 will not control the fire. Due consideration should be given to the stability of the ship due to the effect of accumulated water. **Medical first aid** Refer to the *Medical First Aid Guide* (MFAG), as amended.

CALCIUM NITRATE FERTILIZER

The provisions of this schedule shall apply only for cargoes containing not more than 15.5% total nitrogen and at least 12% water.

Description
Granules mainly of a double salt (calcium nitrate and ammonium nitrate). Refer to the schedule for CALCIUM NITRATE UN 1454 where the total nitrogen content exceeds 15.5%, or where the water content is less than 12%.

Characteristics

Physical properties			
Size	**Angle of repose**	**Bulk density (kg/m^3)**	**Stowage factor (m^3/t)**
1 mm to 4 mm	34°	1,053 to 1,111	0.90 to 0.95
Hazard classification			
Class	**Subsidiary hazard(s)**	**MHB**	**Group**
Not applicable	Not applicable	Not applicable	C

Hazard
No special hazards.
This cargo is non-combustible or has a low fire risk.

Stowage and segregation
"Separated from" foodstuffs.

Hold cleanliness
Clean and dry as relevant to the hazards of the cargo.

Weather precautions
This cargo shall be kept as dry as practicable. This cargo shall not be handled during precipitation. During handling of this cargo, all non-working hatches of the cargo spaces into which this cargo is loaded, or to be loaded, shall be closed.

Loading
Trim in accordance with the relevant provisions required under sections 4 and 5 of this Code.

Precautions
No special requirements.

Ventilation
The cargo spaces carrying this cargo shall not be ventilated during voyage.

Carriage
No special requirements.

Discharge
No special requirements.

Clean-up
No special requirements.

CARBORUNDUM

Description
A hard black crystalline compound of carbon and silicon. Odourless. No moisture content.

Characteristics

Physical properties			
Size	**Angle of repose**	**Bulk density (kg/m^3)**	**Stowage factor (m^3/t)**
75% lumps: under 203.2 mm 25% lumps: under 12.7 mm	Not applicable	1,786	0.56
Hazard classification			
Class	**Subsidiary hazard(s)**	**MHB**	**Group**
Not applicable	Not applicable	Not applicable	C

Hazard
Slightly toxic by inhalation.
This cargo is non-combustible or has a low fire risk.

Stowage and segregation
No special requirements.

Hold cleanliness
No special requirements.

Weather precautions
No special requirements.

Loading
Trim in accordance with the relevant provisions required under sections 4 and 5 of this Code. As the density of the cargo is extremely high, the tank top may be overstressed unless the cargo is evenly spread across the tank top to equalize the weight distribution. Due consideration shall be given to ensure that the tank top is not overstressed during the voyage and during loading by a pile of the cargo.

Precautions
Protect machinery, accommodation and equipment from dust. Personnel involved in cargo handling shall wear protective clothing and dust filter masks.

Ventilation
No special requirements.

Carriage
No special requirements.

Discharge
No special requirements.

Clean-up
No special requirements.

CASTOR BEANS or
CASTOR MEAL or
CASTOR POMACE or
CASTOR FLAKE UN 2969

Description
The beans from which castor oil is obtained.

Characteristics

Physical properties			
Size	**Angle of repose**	**Bulk density (kg/m^3)**	**Stowage factor (m^3/t)**
Not applicable	Not applicable	-	-
Hazard classification			
Class	**Subsidiary hazard(s)**	**MHB**	**Group**
9	Not applicable		B

Hazard
Contain a powerful allergen which, by inhalation of dust or by skin contact with crushed bean products, can give rise to severe irritation of the skin, eyes and mucous membranes in some persons. They are also toxic by ingestion.

Stowage and segregation
"Separated from" foodstuffs and oxidizing materials (goods in packages and solid bulk materials).

Hold cleanliness
No special requirements.

Weather precautions
No special requirements.

Loading
Trim in accordance with the relevant provisions required under sections 4 and 5 of this Code.

Precautions
Due consideration shall be given to prevent dust entering living quarters and working areas. Castor meal, castor pomace and castor flakes shall not be carried in bulk.

Appropriate precautions shall be taken to protect machinery and accommodation spaces from the dust of the cargo. Bilge wells of the cargo spaces shall be protected from ingress of the cargo. Due consideration shall be given to protect equipment from the dust of the cargo. Persons who may be exposed to the dust of the cargo shall wear goggles or other equivalent dust eye-protection and dust filter masks. Those persons shall wear protective clothing, as necessary.

Ventilation
Surface ventilation only, either natural or mechanical, shall be conducted, as necessary, during the voyage for this cargo.

Carriage
No special requirements.

Discharge
No special requirements.

Clean-up
After discharge of this cargo, the cargo spaces shall be thoroughly cleaned and washed out to remove all traces of the cargo.

Emergency procedures

Special emergency equipment to be carried Protective clothing (gloves, boots, coveralls and headgear). Self-contained breathing apparatus. Spray nozzles.
Emergency procedures Wear protective clothing and self-contained breathing apparatus. **Emergency action in the event of fire** Batten down; use ship's fixed fire-fighting installation, if available. Exclusion of air may be sufficient to control fire. **Medical first aid** Refer to the *Medical First Aid Guide* (MFAG), as amended.

CEMENT

Description
Cement is a finely ground powder which becomes almost fluid in nature when aerated or significantly disturbed, thereby creating a very minimal angle of repose. After loading is completed, de-aeration occurs almost immediately and the product settles into a stable mass. Cement dust can be a major concern during loading and discharge if the vessel is not specially designed as a cement carrier or shore equipment is not fitted with special dust control equipment.

Characteristics

Physical properties			
Size	**Angle of repose**	**Bulk density (kg/m^3)**	**Stowage factor (m^3/t)**
Up to 0.1 mm	Not applicable	1,000 to 1,493	0.67 to 1.00
Hazard classification			
Class	**Subsidiary hazard(s)**	**MHB**	**Group**
Not applicable	Not applicable	Not applicable	C

Hazard
It may shift when aerated.
This cargo is non-combustible or has a low fire risk.

Stowage and segregation
No special requirements.

Hold cleanliness
Clean and dry as relevant to the hazards of the cargo.

Weather precautions
This cargo shall be kept as dry as practicable. This cargo shall not be handled during precipitation. During handling of this cargo, all non-working hatches of the cargo spaces into which this cargo is loaded, or to be loaded, shall be closed.

Loading
The ship shall be kept upright during loading of this cargo. This cargo shall be so trimmed to the boundaries of the cargo space that the angle of the surface of the cargo with the horizontal plane does not exceed 25°. Both the specific gravity and the flow characteristics of this cargo are dependent on the volume of air in the cargo. The volume of air in this cargo may be up to 12%. This cargo shows fluid state prior to settlement. The ship carrying this cargo shall not depart until the cargo has settled. After the settlement, shifting of the cargo is not liable to occur unless the angle of the surface with the horizontal plane exceeds 30°.

Precautions
Appropriate precautions shall be taken to protect machinery and accommodation spaces from the dust of the cargo. Bilge wells of the cargo spaces shall be protected from ingress of the cargo. Due consideration shall be given to protect equipment from the dust of the cargo. Persons who may be exposed to the dust of the cargo shall wear protective clothing, goggles or other equivalent dust eye-protection and dust filter masks, as necessary. Bilge wells shall be clean, dry and covered as appropriate, to prevent ingress of the cargo.

Ventilation
The cargo spaces carrying this cargo shall not be ventilated during voyage.

Carriage
After the completion of loading of this cargo, the hatches of the cargo spaces shall be sealed, as necessary. All vents and access ways to the cargo spaces shall be shut during the voyage. Bilges in the cargo spaces carrying this cargo shall not be pumped unless special precautions are taken.

Discharge
No special requirements.

Clean-up
In the case that the residues of this cargo are to be washed out, the cargo spaces and the other structures and equipment which may have been in contact with this cargo or its dust shall be thoroughly swept prior to washing out. Particular attention shall be given to bilge wells and framework in the cargo spaces. The fixed bilge pumps shall not be used to pump the cargo spaces, because this cargo may make the bilge systems inoperative.

CEMENT CLINKERS

Description
Cement is formed by burning limestone with clay. This burning produces rough cinder lumps that are later crushed to a fine powder to produce cement. The rough cinder lumps are called clinkers and are shipped in this form to avoid the difficulties of carrying cement powder.

Characteristics

Physical properties			
Size	**Angle of repose**	**Bulk density (kg/m^3)**	**Stowage factor (m^3/t)**
Up to 40 mm	Not applicable	1,190 to 1,639	0.61 to 0.84
Hazard classification			
Class	**Subsidiary hazard(s)**	**MHB**	**Group**
Not applicable	Not applicable	Not applicable	C

Hazard
No special hazards.
This cargo is non-combustible or has a low fire risk.

Stowage and segregation
No special requirements.

Hold cleanliness
Clean and dry as relevant to the hazards of the cargo.

Weather precautions
This cargo shall be kept as dry as practicable. This cargo shall not be handled during precipitation. During handling of this cargo, all non-working hatches of the cargo spaces into which this cargo is loaded, or to be loaded, shall be closed.

Loading
Trim in accordance with the relevant provisions required under sections 4 and 5 of this Code.

Precautions
Appropriate precautions shall be taken to protect machinery and accommodation spaces from the dust of the cargo. Bilge wells of the cargo spaces shall be protected from ingress of the cargo. Due consideration shall be given to protect equipment from the dust of the cargo. Persons who may be exposed to the dust of the cargo shall wear protective clothing, goggles or other equivalent dust eye-protection and dust filter masks, as necessary. Bilge wells shall be clean, dry and covered as appropriate, to prevent ingress of the cargo.

Ventilation
The cargo spaces carrying this cargo shall not be ventilated during voyage.

Carriage
After the completion of loading of this cargo, the hatches of the cargo spaces shall be sealed.

All vents and access ways to the cargo spaces shall be shut during the voyage. Bilges in the cargo spaces carrying this cargo shall not be pumped unless special precautions are taken.

Discharge
No special requirements.

Clean-up
In the case that the residues of this cargo are to be washed out, the cargo spaces and the other structures and equipment which may have been in contact with this cargo or its dust shall be thoroughly swept prior to washing out.

CHAMOTTE

Description
Burned clay. Grey. Shipped in the form of fine crushed stone. Used by zinc smelters and in manufacture of firebrick (road metal). Dusty.

Characteristics

Physical properties			
Size	**Angle of repose**	**Bulk density (kg/m^3)**	**Stowage factor (m^3/t)**
Up to 10 mm	Not applicable	667	1.50
Hazard classification			
Class	**Subsidiary hazard(s)**	**MHB**	**Group**
Not applicable	Not applicable	Not applicable	C

Hazard
No special hazards.
This cargo is non-combustible or has a low fire risk.

Stowage and segregation
No special requirements.

Hold cleanliness
No special requirements.

Weather precautions
No special requirements.

Loading
Trim in accordance with the relevant provisions required under sections 4 and 5 of this Code.

Precautions
Appropriate precautions shall be taken to protect machinery and accommodation spaces from the dust of the cargo. Bilge wells of the cargo spaces shall be protected from ingress of the cargo. Due consideration shall be given to protect equipment from the dust of the cargo. Persons who may be exposed to the dust of the cargo shall wear protective clothing, goggles or other equivalent dust eye-protection and dust filter masks, as necessary.

Ventilation
No special requirements.

Carriage
No special requirements.

Discharge
No special requirements.

Clean-up
No special requirements.

CHARCOAL

Description
Wood burnt at a high temperature with as little exposure to air as possible. Very dusty, light cargo. Can absorb moisture to about 18 to 70% of its weight. Black powder or granules.

Characteristics

Physical properties			
Size	**Angle of repose**	**Bulk density (kg/m^3)**	**Stowage factor (m^3/t)**
-	Not applicable	199	5.02
Hazard classification			
Class	**Subsidiary hazard(s)**	**MHB**	**Group**
Not applicable	Not applicable	CB and/or SH	B

Hazard
May ignite spontaneously. Contact with water may cause self-heating. Liable to cause oxygen depletion in the cargo space.

Stowage and segregation
Segregation as required for class 4.1 materials. "Separated from" oily materials.

Hold cleanliness
Clean and dry as relevant to the hazards of the cargo.

Weather precautions
This cargo shall be kept as dry as practicable. This cargo shall not be handled during precipitation. During handling of this cargo, all non-working hatches of the cargo spaces into which this cargo is loaded, or to be loaded, shall be closed.

Loading
Trim in accordance with the relevant provisions required under sections 4 and 5 of this Code. Hot charcoal screenings in excess of 55ºC shall not be loaded.

Precautions
Charcoal in class 4.2 shall not be carried in bulk. This cargo shall be exposed to the weather for not less than 13 days prior to shipment. Prior to loading, the manufacturer or shipper shall give the master a certificate stating that the cargo is not class 4.2 in accordance with the result of the test approved by the competent authority.* The certificate shall also state that this cargo has been weathered for not less than 13 days. This cargo shall only be accepted for loading when the actual moisture content of the cargo is not more than 10%.

Appropriate precautions shall be taken to protect machinery and accommodation spaces from the dust of the cargo. Bilge wells of the cargo spaces shall be protected from ingress of the cargo. Due consideration shall be given to protect equipment from the dust of the cargo. Persons who may be exposed to the dust of the cargo shall wear protective clothing, goggles or other equivalent dust eye-protection and dust filter masks, as necessary.

Ventilation
No special requirements.

* Reference is made to section 6 of appendix 2 to this Code.

Carriage
No special requirements.

Discharge
No special requirements.

Clean-up
No special requirements.

Emergency procedures

Special emergency equipment to be carried Nil
Emergency procedures Nil **Emergency action in the event of fire** Batten down; use ship's fixed fire-fighting installation, if fitted. Exclusion of air may be sufficient to control fire. **Medical first aid** Refer to the *Medical First Aid Guide* (MFAG), as amended.

CHEMICAL GYPSUM

Description
Calcium sulphate hydrate generated as a product or by-product in the process of smelter and refinery and polyaluminum chloride. White or brown powder without smell and insoluble.
In use for Gypsum-Board and Cement.

Characteristics

Physical properties			
Size	**Angle of repose**	**Bulk density (kg/m^3)**	**Stowage factor (m^3/t)**
40 µm to 1 mm	Not applicable	570 to 1,170	0.85 to 1.74
Hazard classification			
Class	**Subsidiary hazard(s)**	**MHB**	**Group**
Not applicable	Not applicable	Not applicable	A

Hazard
This cargo may liquefy if shipped at a moisture content in excess of its transportable moisture limit (TML). See sections 7 and 8 of this Code.
This cargo is non-combustible or has a low fire risk.

Stowage and segregation
No special requirements.

Hold cleanliness
No special requirements.

Weather precautions
When a cargo is carried in a ship other than a ship complying with the requirements in 7.3.2 of this Code, the following provisions shall be complied with:

.1 the moisture content of the cargo shall be kept less than its TML during loading operations and the voyage;

.2 unless expressly provided otherwise in this individual schedule, the cargo shall not be handled during precipitation;

.3 unless expressly provided otherwise in this individual schedule, during handling of the cargo, all non-working hatches of the cargo spaces into which the cargo is loaded, or to be loaded, shall be closed;

.4 the cargo may be handled during precipitation under the conditions stated in the procedures required in 4.3.3 of this Code; and

.5 the cargo in a cargo space may be discharged during precipitation provided that the total amount of the cargo in the cargo space is to be discharged in the port.

Loading
Trim in accordance with the relevant provisions required under sections 4 and 5 of this Code.

Precautions
No special requirements.

Ventilation
No special requirements.

Carriage
The appearance of the surface of this cargo shall be checked regularly during the voyage. If free water above the cargo or fluid state of the cargo is observed during the voyage, the master shall take appropriate actions to prevent cargo shifting and potential capsize of the ship, and give consideration to seeking emergency entry into a place of refuge.

Discharge
No special requirements.

Clean-up
Prior to washing out the residues of this cargo, the decks and the cargo spaces shall be shovelled and swept clean, because washing out of this cargo is difficult.

CHLORITE

Description
Grey to green lumps. Chlorite is a group of phyllosilicate minerals and its main component is silicate.

Characteristics

Physical properties			
Size	**Angle of repose**	**Bulk density (kg/m^3)**	**Stowage factor (m^3/t)**
10 mm to 200 mm	Various	1,500 to 2,700	0.37 to 0.67
Hazard classification			
Class	**Subsidiary hazard(s)**	**MHB**	**Group**
Not applicable	Not applicable	Not applicable	C

Hazard
No special hazards.
This cargo is non-combustible or of low fire risk.

Stowage and segregation
No special requirements.

Hold cleanliness
No special requirements.

Weather precautions
No special requirements.

Loading
Trim in accordance with the relevant provisions required under sections 4 and 5 of this Code.

When the stowage factor of this cargo is equal to or less than 0.56 m^3/t, the tank top may be overstressed unless the cargo is evenly spread across the tank top to equalize the weight distribution. Due consideration shall be given to ensure that the tank top is not overstressed during the voyage and during loading by a pile of the cargo.

Precautions
No special requirements.

Ventilation
No special requirements.

Carriage
No special requirements.

Discharge
No special requirements.

Clean-up
No special requirements.

CHOPPED RUBBER AND PLASTIC INSULATION

Description
Plastic and rubber insulation material, clean and free from other materials, in granular form.

Characteristics

Physical properties			
Size	**Angle of repose**	**Bulk density (kg/m^3)**	**Stowage factor (m^3/t)**
Granular 1 mm to 4 mm	Not applicable	500 to 570	1.76 to 1.97
Hazard classification			
Class	**Subsidiary hazard(s)**	**MHB**	**Group**
Not applicable	Not applicable	Not applicable	C

Hazard
No special hazards.
This cargo is non-combustible or has a low fire risk.

Stowage and segregation
No special requirements.

Hold cleanliness
No special requirements.

Weather precautions
No special requirements.

Loading
Trim in accordance with the relevant provisions required under sections 4 and 5 of this Code.

Precautions
During handling and carriage, no hot work, burning and smoking shall be permitted in the vicinity of the cargo spaces containing this cargo. Prior to shipment, a certificate shall be given to the master by the shipper stating that this cargo consists of clean plastic and rubber material only. When the planned interval between the commencement of loading and the completion of discharge of this cargo exceeds 5 days, the cargo shall not be accepted for loading unless the cargo is to be carried in cargo spaces fitted with a fixed gas fire-extinguishing system. The Administration may, if it considers that the planned voyage does not exceed 5 days from the commencement of loading to the completion of discharge, exempt from the requirements of a fitted fixed gas fire-extinguishing system in the cargo spaces for the carriage of this cargo.

Ventilation
No special requirements.

Carriage
No special requirements.

Discharge
No special requirements.

Clean-up
No special requirements.

CHROME PELLETS

Description
Pellets. Moisture: up to 2% maximum.

Characteristics

Physical properties			
Size	**Angle of repose**	**Bulk density (kg/m^3)**	**Stowage factor (m^3/t)**
8 mm to 25 mm	Not applicable	1,667	0.60
Hazard classification			
Class	**Subsidiary hazard(s)**	**MHB**	**Group**
Not applicable	Not applicable	Not applicable	C

Hazard
No special hazards.
This cargo is non-combustible or has a low fire risk.

Stowage and segregation
No special requirements.

Hold cleanliness
No special requirements.

Weather precautions
No special requirements.

Loading
Trim in accordance with the relevant provisions required under sections 4 and 5 of this Code.

Precautions
No special requirements.

Ventilation
No special requirements.

Carriage
No special requirements.

Discharge
No special requirements.

Clean-up
No special requirements.

CHROMITE ORE

Description
Concentrates or lumpy, dark grey in colour.

Characteristics

Physical properties			
Size	**Angle of repose**	**Bulk density (kg/m^3)**	**Stowage factor (m^3/t)**
Up to 254 mm	Not applicable	2,222 to 3,030	0.33 to 0.45
Hazard classification			
Class	**Subsidiary hazard(s)**	**MHB**	**Group**
Not applicable	Not applicable	Not applicable	C

Hazard
Toxic by dust inhalation.
This cargo is non-combustible or has a low fire risk.

Stowage and segregation
No special requirements.

Hold cleanliness
No special requirements.

Weather precautions
No special requirements.

Loading
Trim in accordance with the relevant provisions required under sections 4 and 5 of this Code.

As the density of the cargo is extremely high, the tank top may be overstressed unless the cargo is evenly spread across the tank top to equalize the weight distribution. Due consideration shall be given to ensure that the tank top is not overstressed during the voyage and during loading by a pile of the cargo.

Precautions
Appropriate precautions shall be taken to protect machinery and accommodation spaces from the dust of the cargo. Bilge wells of the cargo spaces shall be protected from ingress of the cargo. Due consideration shall be given to protect equipment from the dust of the cargo. Persons who may be exposed to the dust of the cargo shall wear goggles or other equivalent dust eye-protection and dust filter masks. Those persons shall wear protective clothing, as necessary.

Ventilation
No special requirements.

Carriage
No special requirements.

Discharge
No special requirements.

Clean-up
No special requirements.

CLAY

Description
Clay is usually light to dark grey and comprises 10% soft lumps and 90% soft grains. The material is usually moist but not wet to the touch. Moisture is up to 25%.

Characteristics

Physical properties			
Size	**Angle of repose**	**Bulk density (kg/m^3)**	**Stowage factor (m^3/t)**
Up to 150 mm	Not applicable	746 to 1,515	0.66 to 1.34
Hazard classification			
Class	**Subsidiary hazard(s)**	**MHB**	**Group**
Not applicable	Not applicable	Not applicable	C

Hazard
No special hazards.
This cargo is non-combustible or has a low fire risk.

Stowage and segregation
No special requirements.

Hold cleanliness
No special requirements.

Weather precautions
This cargo shall be kept as dry as practicable. This cargo shall not be handled during precipitation. During handling of this cargo, all non-working hatches of the cargo spaces into which this cargo is loaded, or to be loaded, shall be closed.

Loading
Trim in accordance with the relevant provisions required under sections 4 and 5 of this Code.

Precautions
The moisture content of this cargo shall be kept as low as practicable to prevent the cargo becoming glutinous and handling of the cargo becoming extremely difficult.

Ventilation
No special requirements.

Carriage
No special requirements.

Discharge
No special requirements.

Clean-up
After discharge of this cargo, particular attention shall be given to the bilge wells of the cargo spaces.

CLINKER ASH

Description
Coal ash discharged from coal-fired power stations. Grey-coloured, possibly ranging from near-white to near-black, and odourless substance collected from the bottom of boilers, and resembles sand. Moisture content is about 15% to 23%. This cargo can be classified into wet type, which is discharged using water, and dry type, which is discharged out under dry condition.

Characteristics

Physical properties			
Size	**Angle of repose**	**Bulk density (kg/m^3)**	**Stowage factor (m^3/t)**
Up to 90 mm	Not applicable	600 to 1,700	0.59 to 1.67
Hazard classification			
Class	**Subsidiary hazard(s)**	**MHB**	**Group**
Not applicable	Not applicable	TX	A and B

Hazard
The material may liquefy if shipped at a moisture content in excess of its transportable moisture limit (TML). See sections 7 and 8 of this Code. May cause long-term health effects.
This cargo is non-combustible or has a low fire risk.

Stowage and segregation
No special requirements.

Hold cleanliness
No special requirements.

Weather precautions
This cargo shall be kept as dry as practicable before loading, during loading and while on the voyage. When a cargo is carried in a ship other than a ship complying with the requirements in 7.3.2 or a ship complying with the requirements in 7.3.3 of this Code, the following provisions shall be complied with:

.1 the moisture content of the cargo shall be kept less than its TML during loading operations and the voyage;

.2 unless expressly provided otherwise in this individual schedule, the cargo shall not be handled during precipitation;

.3 unless expressly provided otherwise in this individual schedule, during handling of the cargo, all non-working hatches of the cargo spaces into which the cargo is loaded, or to be loaded, shall be closed;

.4 the cargo may be handled during precipitation under the conditions stated in the procedures required in 4.3.3 of this Code; and

.5 the cargo in a cargo space may be discharged during precipitation provided that the total amount of the cargo in the cargo space is to be discharged in the port.

Loading
Trim in accordance with the relevant provisions required under sections 4 and 5 of this Code.

Precautions
Persons who may be exposed to the dust of the cargo shall wear gloves, goggles or other equivalent dust eye-protection and dust filter masks.

Ventilation
No special requirements.

Carriage
No special requirements.

Discharge
No special requirements.

Clean-up
No special requirements.

Emergency procedures

Special emergency equipment to be carried Protective clothing (goggles, dust filter masks, gloves and coveralls).
Emergency procedures Wear protective clothing. **Emergency action in the event of fire** Nil (non-combustible). **Medical first aid** Refer to the *Medical First Aid Guide* (MFAG), as amended.

COAL
(see also the appendix to this schedule)

Coal shall be classified as group A and B unless classified as group B only by a test determined by the appropriate authority* or where it has the following particle size distribution:

.1 not more than 10% by weight of particles less than 1 mm (D_{10} > 1 mm); and

.2 not more than 50% by weight of particles less than 10 mm (D_{50} > 10 mm).

Notwithstanding the above, a blend of two or more coals shall be classified as group A and B unless all original coals in the blend are group B only.

Description
Coal (bituminous and anthracite) is a natural, solid, combustible material consisting of amorphous carbon and hydrocarbons.

Characteristics

Physical properties			
Size	**Angle of repose**	**Bulk density (kg/m^3)**	**Stowage factor (m^3/t)**
Up to 50 mm	Not applicable	654 to 1,266	0.79 to 1.53
Hazard classification			
Class	**Subsidiary hazard(s)**	**MHB**	**Group**
Not applicable	Not applicable	CB and/or SH and/or WF and/or CR	B (and A)

Hazards
Coal may create flammable atmospheres, may heat spontaneously, may deplete the oxygen concentration, may corrode metal structures. This cargo may liquefy if shipped at a moisture content in excess of its transportable moisture limit (TML). See sections 7 and 8 of this Code.

Stowage and segregation
Refer to the appendix to this schedule.

Hold cleanliness
Clean and dry as relevant to the hazards of the cargo.

Weather precautions
When a cargo may liquefy during voyage in case that the moisture content of the cargo is in excess of its TML and the cargo is carried in a ship other than a ship complying with the requirements in 7.3.2 of this Code, the following provisions shall be complied with:

.1 the moisture content of the cargo shall be kept less than its TML during loading operations and the voyage;

.2 unless expressly provided otherwise in this individual schedule, the cargo shall not be handled during precipitation;

.3 unless expressly provided otherwise in this individual schedule, during handling of the cargo, all non-working hatches of the cargo spaces into which the cargo is loaded, or to be, loaded shall be closed;

* See 8.1 of this Code.

.4 the cargo may be handled during precipitation under the conditions stated in the procedures required in 4.3.3 of this Code; and

.5 the cargo in a cargo space may be discharged during precipitation provided that the total amount of the cargo in the cargo space is to be discharged in the port.

Loading
Trim in accordance with the relevant provisions required under sections 4 and 5 of this Code.

Without reasonable trimming, vertical cracks into the body of the coal may form, permitting oxygen circulation and possible self-heating.

Due consideration shall be given to moisture migration and formation of dangerous wet base when blended coals are loaded.

Precautions
Bilge wells shall be clean, dry and covered as appropriate, to prevent ingress of the cargo. Refer to the appendix to this schedule.

Ventilation
Refer to Special precautions in the appendix to this schedule.

Carriage
Refer to the appendix to this schedule.

Discharge
No special requirements.

Clean-up
No special requirements.

Emergency procedures

Special emergency equipment to be carried Nil
Emergency procedures Nil **Emergency action in the event of fire** Batten down. Exclusion of air may be sufficient to control the fire. **Do not use water**. Seek expert advice and consider heading to the nearest port. **Medical first aid** Refer to the *Medical First Aid Guide* (MFAG), as amended.

Remarks
The use of CO_2 or inert gas, if available, should be withheld until fire is apparent.

APPENDIX

COAL

Properties and characteristics

1. Coals may emit methane, a flammable gas. A methane/air mixture containing between 5% and 16% methane constitutes an explosive atmosphere which can be ignited by sparks or naked flame, e.g. electrical or frictional sparks, a match or lighted cigarette. Methane is lighter than air and may, therefore, accumulate in the upper region of the cargo space or other enclosed spaces. If the cargo space boundaries are not tight, methane can seep through into spaces adjacent to the cargo space.

2. Coals may be subject to oxidation, leading to depletion of oxygen and an increase in carbon dioxide or carbon monoxide concentrations in the cargo space. Carbon monoxide is an odourless gas, slightly lighter than air and has flammable limits in air of 12% to 75% by volume. It is toxic by inhalation, with an affinity for blood haemoglobin over 200 times that of oxygen.

3. Some coals may heat spontaneously and the spontaneous heating may lead to spontaneous combustion in the cargo space. Flammable and toxic gases, including carbon monoxide, may be produced.

4. Some coals may be liable to react with water and produce acids which may cause corrosion. Flammable and toxic gases, including hydrogen, may be produced. Hydrogen is an odourless gas, much lighter than air and has flammable limits in air of 4% to 75% by volume.

Segregation and stowage requirements

1. Unless expressly provided otherwise, boundaries of cargo spaces where this cargo is carried shall be resistant to fire and liquids.

2. This cargo shall be "separated from" goods of classes 1 (division 1.4), 2, 3, 4 and 5 in packaged form (see IMDG Code) and "separated from" solid bulk materials of classes 4 and 5.1.

3. Stowage of goods of class 5.1 in packaged form or solid bulk materials of class 5.1 above or below this cargo shall be prohibited.

4. The master shall ensure that this cargo is not stowed adjacent to hot areas.[*]

5. This cargo shall be "separated longitudinally by an intervening complete compartment or hold from" goods of class 1 other than division 1.4.

Note: For interpretation of these terms, see section 9.

[*] Refer to Interpretation of stowage and segregation requirements for brown coal briquettes and coal related to "hot areas" in the IMSBC Code (MSC.1/Circ.1351/Rev.1).

General requirements for all types of these cargoes

1 Prior to loading, the shipper or his appointed agent shall provide in writing to the master the characteristics of the cargo and the recommended safe handling procedures for loading and transport of the cargo. As a minimum, the cargo's contract specifications for moisture content, sulphur content and size shall be stated, and especially whether the cargo may be liable to emit methane or self-heat.

2 Before loading, the master shall ensure the following:

.1 All cargo spaces and bilge wells are clean and dry. Any residue of waste material or previous cargo is removed, including removable cargo battens.

.2 All electrical cables and components situated in cargo spaces and adjacent enclosed spaces are free from defects. Such cables and electrical components are safe for use in an explosive atmosphere or positively isolated. The provisions of this clause need not apply to engine-rooms where the engine-room is separated from the cargo space by a gastight bulkhead with no direct access.

3 The ship shall be suitably fitted and carry on board appropriate instruments for measuring the following without requiring entry in the cargo space:

.1 concentration of methane in the atmosphere;

.2 concentration of oxygen in the atmosphere;

.3 concentration of carbon monoxide in the atmosphere; and

.4 pH value of cargo space bilge samples.

4 These instruments shall be regularly serviced and calibrated. Ship personnel shall be trained in the use of such instruments. Details of gas measurement procedures are given at the end of this appendix.

5 It is recommended that means be provided for measuring the temperature of the cargo in the range 0°C to 100°C to enable the measurement of temperature of the cargo while being loaded and during voyage without requiring entry into the cargo space.

6 Smoking and the use of naked flames shall not be permitted in the cargo areas and adjacent spaces and appropriate warning notices shall be posted in conspicuous places. Burning, cutting, chipping, welding or other sources of ignition shall not be permitted in the vicinity of cargo spaces or in other adjacent spaces, unless the space has been properly ventilated and the methane gas measurements indicate it is safe to do so.

7 Prior to departure, the master shall be satisfied that the surface of the material has been trimmed reasonably level to the boundaries of the cargo space to avoid the formation of gas pockets and to prevent air from permeating the body of the briquettes. Casings leading into the cargo space shall be adequately sealed. The shipper shall ensure that the master receives the necessary cooperation from the loading terminal.

8 The atmosphere in the space above the cargo in each space shall be regularly monitored for the concentration of methane, oxygen and carbon monoxide. Details of

gas monitoring procedures are given at the end of this appendix. The results of monitoring shall be recorded. The frequency of the monitoring shall be determined based upon the information provided by the shipper and the information obtained through the analysis of the atmosphere in the cargo space.

9 Unless expressly provided otherwise, surface ventilation shall be conducted in all cargo spaces carrying this cargo for the first 24 hours after departure from the loading port. During this period, the atmosphere in the cargo spaces shall be monitored once from one sample point per cargo space and, for the purpose of the gas monitoring, the ventilation shall be stopped for an appropriate period prior to the gas monitoring.

10 When the methane concentrations monitored within 24 hours after departure are at an acceptably low level, the ventilation openings shall be closed and the atmosphere in the cargo spaces shall be monitored. When the methane concentrations monitored within 24 hours after departure are not at an acceptably low level, surface ventilation shall be maintained, except for an appropriate period for gas monitoring, and the atmosphere in the cargo spaces shall be monitored. This procedure shall be followed until the methane concentrations become acceptably low level. In any event, the atmosphere in the cargo spaces shall be monitored on a daily basis.

11 When significant concentrations of methane are subsequently observed in unventilated cargo spaces, the appropriate special precautions for coals emitting methane shall apply.

12 The master shall ensure, as far as practicable, that any gases which may be emitted from this cargo do not accumulate in adjacent enclosed spaces.

13 The master shall ensure that enclosed working spaces such as storerooms, carpenter's shop, passageways, tunnels, etc., are regularly monitored for the presence of methane, oxygen and carbon monoxide. Such spaces shall be adequately ventilated.

14 Regular hold bilge testing shall be systematically carried out during voyage carrying this cargo. If the pH monitoring indicates that a corrosion risk exists, bilges shall be frequently pumped out during the voyage in order to avoid possible accumulation of acids on tank tops and in the bilge system.

15 If the behaviour of the cargo during the voyage differs from that specified in the cargo declaration, the master shall report such differences to the shipper. Such reports will enable the shipper to maintain records on the behaviour of the coal cargoes, so that the information provided to the master can be reviewed in the light of transport experience.

Special precautions

1 Coals emitting methane

When the shipper has informed that the cargo is liable to emit methane or analysis of the atmosphere in the cargo space indicates the presence of methane in excess of 20% of the Lower Explosion Limit (LEL), the following additional precautions shall be taken:

.1 Adequate surface ventilation shall be maintained, except for an appropriate period for the purpose of gas monitoring.

.2 Care shall be taken to remove any accumulated gases prior to operation of the hatch covers or other openings for any reason, including discharging.

Care shall be taken to operate hatch covers of the cargo spaces and other openings to avoid creating sparks. Smoking and the use of naked flame shall be prohibited.

.3 Personnel shall not be permitted to enter the cargo space or enclosed adjacent spaces unless the space has been ventilated and the atmosphere tested and found to be gas-free and to have sufficient oxygen to support life. Notwithstanding these provisions, emergency entry into the cargo space may be permitted without ventilation, testing the atmosphere or both, provided that the entry into the cargo space is undertaken only by trained personnel wearing self-contained breathing apparatus under the supervision of a responsible officer and special precautions are observed to ensure that no source of ignition is carried into the space.

.4 The master shall ensure that enclosed working spaces such as storerooms, carpenter's shops, passageways, tunnels, etc., are regularly monitored for the presence of methane. Such spaces shall be adequately ventilated and, in the case of mechanical ventilation, only equipment safe for use in an explosive atmosphere shall be used.

2 Self-heating coals

When the shipper informed that the cargo is likely to self-heat or analysis of the atmosphere in the cargo space indicates an increasing concentration of carbon monoxide, then the following additional precautions shall be taken:

.1 The cargo spaces shall be closed immediately after completion of loading in each cargo space. The hatch covers may also be additionally sealed with a suitable sealing tape. Only natural surface ventilation shall be permitted and ventilation shall be limited to the absolute minimum time necessary to remove methane which may have accumulated.

.2 Personnel shall not enter the cargo space during voyage, unless they are wearing self-contained breathing apparatus and access is critical to safety of life and the safety of the ship.

.3 Prior to loading, temperature of this cargo shall be monitored. This cargo shall only be accepted for loading when the temperature of the cargo is not higher than 55°C.

.4 When the carbon monoxide level is increasing steadily, a potential self-heating may be developing. In such a case, the cargo space shall be completely closed and all ventilation ceased, and the master shall seek expert advice immediately. Water shall not be used for cooling material or fighting coal cargo fires at sea, but may be used for cooling the boundaries of the cargo space.

.5 When the carbon monoxide level in any cargo space reaches 50 ppm or exhibits a steady rise over three consecutive days, a self-heating condition may be developing and the master shall inform the shipper and the company* of, at least, the following information if an accurate assessment of the situation is to be achieved:

* Refer to SOLAS regulation IX/1.2.

.1 identity of the cargo spaces involved; monitoring results covering carbon monoxide, methane and oxygen concentrations;

.2 if available, temperature of the cargo, location and method used to obtain results;

.3 time gas sample taken (monitoring routine);

.4 time ventilators opened/closed;

.5 quantity of coal in hold(s) involved;

.6 type of coal as per cargo information, and any special precautions indicated on information;

.7 date loaded, and ETA at intended discharge port (which shall be specified); and

.8 comments or observations from the ship's master.

3 Gravity-fed self-unloading bulk carrier

3.1 A gravity-fed self-unloading bulk carrier means a vessel that has gravity-fed systems from the bottom of cargo holds, using gates that may be opened or closed to feed the cargo onto conveyor belts. Such belts run in fore and aft direction underneath the holds; from there the cargo is carried by means of conveyor systems to the deck and discharged onto shore with a self-unloading boom that can extend over the shore and has a conveyor belt. This is not applicable for the vessels with unloading systems such as cranes and grabs.

3.2 When this cargo is carried on a gravity-fed self-unloading bulk carrier, the following requirements of this appendix need not apply:

- paragraph 1 of "Segregation and stowage requirements"; and
- paragraph 9 of "General requirements for all types of these cargoes".

3.3 Loaded voyage procedures for atmospheric monitoring of cargoes

3.3.1 Bulk coal cargo safety procedures

3.3.1.1 These requirements apply when these cargoes are to be carried on a gravity-fed self-unloading bulk carrier. It is recommended that a document, such as a flow chart, describing cargo operations and carriage procedures for these cargoes be provided to the ship by the vessel's operator.

3.4 Ventilation

3.4.1 When ventilating, it shall be ensured that excess air does not ingress excessively into the body of the cargo of coal as this may eventually promote self-heating.

3.4.2 Due to the presence of non-airtight unloading gates at the bottom of the cargo hoppers just above the tunnels, the following methods of ventilation shall be used:

- if methane is detected in the tunnel, it shall be "positive-pressure" ventilated (more supply than exhaust in the tunnels, to remove methane gas); and

- if carbon monoxide is detected in the tunnel, it shall be "negative-pressure" ventilated (more exhaust than supply in the tunnels, to remove carbon monoxide). The release of carbon monoxide may be an indication of self-heating.

Procedures for gas monitoring of coal cargoes

1 Observations

1.1 Carbon monoxide monitoring, when conducted in accordance with the following procedures, will provide a reliable early indication of self-heating within this cargo. This allows preventive action to be considered without delay.

A steady rise in the level of carbon monoxide detected within a cargo space is a conclusive indication that self-heating is taking place.

1.2 All vessels engaged in the carriage of this cargo shall carry on board an instrument for measuring methane, oxygen and carbon monoxide gas concentrations, to enable the monitoring of the atmosphere within the cargo space. This instrument shall be regularly serviced and calibrated in accordance with the manufacturer's instructions. Care shall be exercised in interpreting methane measurements carried out in the low oxygen concentrations often found in unventilated cargo holds. The catalytic sensors normally used for the detection of methane rely on the presence of sufficient oxygen for accurate measurement. This phenomenon does not affect the measurement of carbon monoxide, or measurement of methane by infrared sensor. Further guidance may be obtained from the instrument manufacturer.

2 Sampling and measurement procedure

2.1 Equipment

2.1.1 An instrument which is capable of measuring methane, oxygen and carbon monoxide concentrations shall be provided on board a ship carrying this cargo. The instrument shall be fitted with an aspirator, flexible connection and a length of spark-proof metal tubing to enable a representative sample to be obtained from within the square of the hatch.

2.1.2 When recommended by the manufacturer, a suitable filter shall be used to protect the instrument against the ingress of moisture. The presence of even a small amount of moisture will compromise the accuracy of the measurement.

2.2 Siting of sampling points

2.2.1 In order to obtain meaningful information about the behaviour of this cargo in a cargo space, gas measurements shall be made via one sample point per cargo space. To ensure flexibility of measurement in adverse weather, two sample points shall be provided per cargo space, one on the port side and one on the starboard side of the hatch cover or hatch coaming. (Refer to the diagram of gas sampling point.) Measurement from either of these locations is satisfactory.

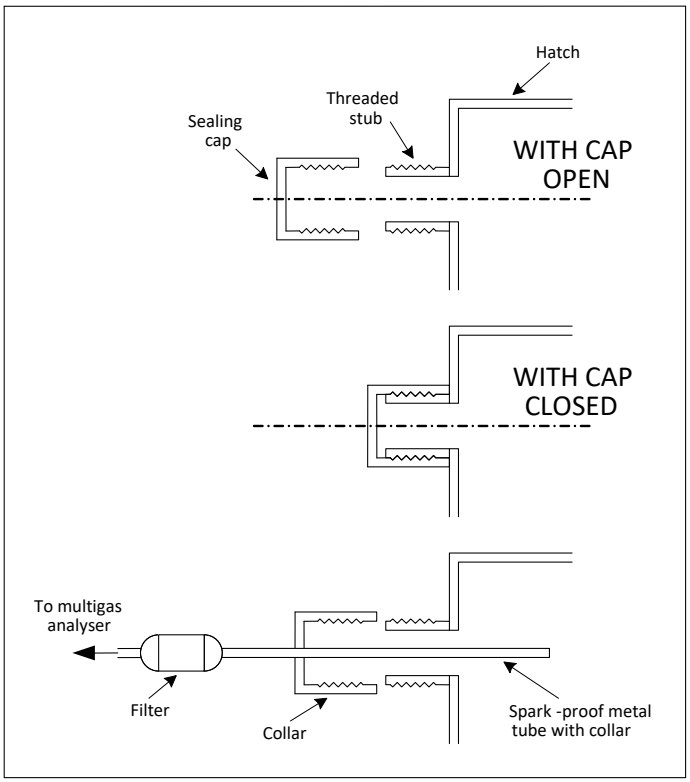

Diagram of gas sampling point

2.2.2 Each sample point shall comprise a hole of diameter approximately 12 mm positioned as near to the top of the hatch coaming as possible. It shall be sealed with a sealing cap to prevent ingress of water and air. It is essential that this cap is securely replaced after each measurement to maintain a tight seal.

2.2.3 The provisions of any sample point shall not compromise the seaworthiness of the vessel.

2.3 Measurement

2.3.1 The explanation on procedures for measurement is as follows:

.1 remove the sealing cap, insert the spark-proof metal tube into the sampling point and tighten the collar to ensure an adequate seal;

.2 connect the instrument to the sampling tube;

.3 draw a sample of the atmosphere through the tube, using the aspirator, until steady readings are obtained;

.4 log the results on a form which records cargo space, date and time for each measurement; and

.5 put back the sealing cap.

2.4 Measurement strategy

The identification of incipient self-heating from measurement of gas concentrations is more readily achieved under unventilated conditions. This is not always desirable because of the possibility of the accumulation of methane to dangerous concentrations. This is primarily, but not exclusively, a problem in the early stages of a voyage. Therefore it is recommended that cargo spaces are initially ventilated until measured methane concentrations are at an acceptably low level.

2.5 Measurement in unventilated holds

Under normal conditions, one measurement per day is sufficient as a precautionary measure. However, if carbon monoxide levels are higher than 30 ppm then the frequency shall be increased to at least twice a day at suitably spaced intervals. Any additional results shall be logged.

2.6 Measurement in ventilated holds

2.6.1 If the presence of methane is such that the ventilators are required to remain open, then a different procedure shall be applied to enable the onset of any incipient self-heating to be detected.

2.6.2 To obtain meaningful data the ventilators shall be closed for a period before the measurements are taken. This period may be chosen to suit the operational requirements of the vessel, but it is recommended that it is not less than four hours. It is vital in the interests of data interpretation that the shutdown time is constant whichever time period is selected. These measurements shall be taken on a daily basis.

2.7 Measurement in cargo and self-unloading spaces of gravity-fed self-unloading bulk carrier

2.7.1 Measurement in unventilated cargo and self-unloading spaces

2.7.1.1 When the shipper has declared that the coal cargo has or may have self-heating characteristics, the holds shall not be ventilated unless otherwise specified in this section.

2.7.1.2 Under normal conditions, one measurement per day is sufficient as a precautionary measure. If carbon monoxide levels are higher than 30 ppm then the frequency of measurements shall be increased to at least twice daily, at suitable intervals. Any additional results shall be logged.

2.7.1.3 If the carbon monoxide level in any hold indicates a steady rise or reaches 50 ppm, a self-heating condition may be developing and the owners of the vessel shall be notified as outlined in the procedures. Above this level, the vessel shall operate on "negative-pressure" ventilation, in order to reduce the amount of carbon monoxide. Regular monitoring of carbon monoxide levels shall continue.

2.7.1.4 Persons entering cargo or unloading spaces with carbon monoxide levels higher than 30 ppm shall not do so without self-contained breathing apparatus.[*]

[*] Refer to *Revised recommendations for entering enclosed spaces aboard ships* (resolution A.1050(27)).

2.7.2 Measurement in ventilated cargo and self-unloading spaces

2.7.2.1 If the presence of methane is indicated by monitor, and such that ventilation is required, then a different procedure shall be applied to enable the onset of any possible self-heating to be detected. "Positive-pressure" or "through ventilation" shall be operated to remove the methane.

2.7.2.2 To obtain meaningful data, the ventilators and/or ventilation shall be closed for a period before measurements are taken. This period may be chosen to suit the operational requirements of the vessel, but it is recommended that it is not less than four hours. It is vital, in the interests of data interpretation, that the shutdown time is constant whichever time period is selected. These measurements shall be taken on a daily basis. If the carbon monoxide results exhibit a steady rise, or exceed 50 ppm on any day, the owner shall be notified.

2.7.2.3 In addition, the following points shall be considered:

- at no time shall ventilation be shut down when crew members are in the self-unloading spaces;

- special fire-fighting equipment and/or procedures may be necessary for the vessel; and

- establish specific crew training for gravity-fed self-unloading bulk carriers.

COAL SLURRY

Description
Coal slurry is a mixture of fine particles of coal and water.

Characteristics

Physical properties			
Size	**Angle of repose**	**Bulk density (kg/m^3)**	**Stowage factor (m^3/t)**
Under 1 mm	Not applicable	870 to 1,020	0.98 to 1.15
Hazard classification			
Class	**Subsidiary hazard(s)**	**MHB**	**Group**
Not applicable	Not applicable	Not applicable	A

Hazard
This cargo may liquefy if shipped at a moisture content in excess of its transportable moisture limit (TML). See sections 7 and 8 of this Code. Spontaneous combustion is possible if the coal dries out but is unlikely under normal conditions.
This cargo is non-combustible or has a low fire risk.

Stowage and segregation
No special requirements.

Hold cleanliness
Clean and dry as relevant to the hazards of the cargo.

Weather precautions
When a cargo is carried in a ship other than a ship complying with the requirements in 7.3.2 of this Code, the following provisions shall be complied with:

.1 the moisture content of the cargo shall be kept less than its TML during loading operations and the voyage;

.2 unless expressly provided otherwise in this individual schedule, the cargo shall not be handled during precipitation;

.3 unless expressly provided otherwise in this individual schedule, during handling of the cargo, all non-working hatches of the cargo spaces into which the cargo is loaded, or to be loaded, shall be closed;

.4 the cargo may be handled during precipitation under the conditions stated in the procedures required in 4.3.3 of this Code; and

.5 the cargo in a cargo space may be discharged during precipitation provided that the total amount of the cargo in the cargo space is to be discharged in the port.

Loading
Trim in accordance with the relevant provisions required under sections 4 and 5 of this Code.

Precautions
Bilge wells shall be clean, dry and covered as appropriate, to prevent ingress of the cargo.

Ventilation
As this cargo, in general, may emit methane, the cargo spaces carrying this cargo shall be tested regularly, using a suitable gas detector, and natural surface ventilation shall be conducted, as necessary.

Carriage
The appearance of the surface of this cargo shall be checked regularly during the voyage. If free water above the cargo or fluid state of the cargo is observed during the voyage, the master shall take appropriate actions to prevent cargo shifting and potential capsize of the ship, and give consideration to seeking emergency entry into a place of refuge.

Discharge
No special requirements.

Clean-up
No special requirements.

COAL TAR PITCH

Description
A coarse distilled residue of Coal Tar, a by-product of Cokes production. Mostly comprises many kinds of polycyclic aromatic hydrocarbon. A black solid at ambient temperature. It is insoluble in water. A raw material in use for electrodes and materials covering pitch bound on metallurgy coke. The moisture content is up to 6%.

Characteristics

Physical properties			
Size	**Angle of repose**	**Bulk density (kg/m^3)**	**Stowage factor (m^3/t)**
Up to 100 mm 1 to 10% of fine particles: less than 1 mm	Not applicable	600 to 1,100	0.91 to 1.67
Hazard classification			
Class	**Subsidiary hazard(s)**	**MHB**	**Group**
Not applicable	Not applicable	TX and/or CR	B

Hazard
When heated, it melts and turns into inflammable liquid. It softens between 70°C and 120°C. Corrosive to eyes. May cause long-term health effects.
This cargo is non-combustible or has a low fire risk.

Stowage and segregation
No special requirements.

Hold cleanliness
No special requirements.

Weather precautions
No special requirements.

Loading
Trim in accordance with the relevant provisions required under sections 4 and 5 of this Code.

Precautions
Persons who may be in contact with this cargo shall be supplied with protective gloves, dust masks, protective clothing and goggles.

Ventilation
No special requirements.

Carriage
No special requirements.

Discharge
No special requirements.

Clean-up
No special requirements.

Emergency procedures

Special emergency equipment to be carried Protective clothing (goggles, dust filter masks, gloves and coveralls).
Emergency procedures Wear protective clothing, protective gloves, dust masks and goggles. **Emergency action in the event of fire** Batten down; use ship's fixed fire-fighting installation, if fitted. Exclusion of air may be sufficient to control fire. **Medical first aid** Refer to the *Medical First Aid Guide* (MFAG), as amended.

COARSE CHOPPED TYRES

Description
Chopped or shredded fragments of used tyres in coarse size.

Characteristics

Physical properties			
Size	**Angle of repose**	**Bulk density (kg/m^3)**	**Stowage factor (m^3/t)**
15 cm x 20 cm approximately	Not applicable	555	1.80
Hazard classification			
Class	**Subsidiary hazard(s)**	**MHB**	**Group**
Not applicable	Not applicable	Not applicable	C

Hazard
May self-heat slowly if contaminated by oily residue, if not properly aged before shipment and if offered to the shipment in smaller size than indicated in "Characteristics".
This cargo is non-combustible or has a low fire risk.

Stowage and segregation
No special requirements.

Hold cleanliness
Clean and dry as relevant to the hazards of the cargo.

Weather precautions
This cargo shall be kept as dry as practicable before loading, during loading and during voyage. This cargo shall not be loaded during precipitation. During loading of this cargo, all non-working hatches of the cargo spaces to which this cargo is loaded, or to be loaded, shall be closed.

Loading
Trim in accordance with the relevant provisions required under sections 4 and 5 of this Code.

Precautions
During handling and carriage no hot work, burning and smoking shall be permitted in the vicinity of the cargo spaces containing this cargo. Prior to shipment, a certificate shall be given to the master by the shipper stating that this cargo is free of oily products or oily residue and has been stored under cover but in the open air for not less than 15 days prior to shipment.

When the planned interval between the commencement of loading and the completion of discharge of this cargo exceeds 5 days, the cargo shall not be accepted for loading unless the cargo is to be carried in cargo spaces fitted with a fixed gas fire-extinguishing system. The Administration may, if it considers that the planned voyage does not exceed 5 days from the commencement of loading to the completion of discharge, grant exemption from the requirements of a fitted fixed gas fire-extinguishing system in the cargo spaces for the carriage of this cargo.

Ventilation
No special requirements.

Carriage
No special requirements.

Discharge
No special requirements.

Clean-up
No special requirements.

COARSE IRON AND STEEL SLAG AND ITS MIXTURE

Description
A coarse slag arising from iron and steel manufacture, and a coarse slag mixed with one of the following substances or a combination thereof: concrete debris, fly-ash, firebricks, dust collected from iron/steel-making processes, refractory material debris and fine raw materials of iron making.

This cargo includes shaped blocks made of iron and steel slag with one of the additives or a combination of additives: cement, ground granulated blast furnace slag and fly-ash, and its debris, and their mixture with iron and steel slag.

The colour is in the range from greyish-white to dark grey, and the appearance is in the range from granulated, pebble to block shaped.

Characteristics

Physical properties			
Size	**Angle of repose**	**Bulk density (kg/m^3)**	**Stowage factor (m^3/t)**
90 to 100% of lumps: up to 300 mm up to 10% fine particles: less than 1 mm	Not applicable	1,200 to 3,000	0.33 to 0.83
Hazard classification			
Class	**Subsidiary hazard(s)**	**MHB**	**Group**
Not applicable	Not applicable	Not applicable	C

Hazard
No special requirements.
This cargo is non-combustible or has a low fire risk.

Stowage and segregation
No special requirements.

Hold cleanliness
No special requirements.

Weather precautions
No special requirements.

Loading
Trim in accordance with the relevant provisions required under sections 4 and 5 of this Code.

When the stowage factor of this cargo is equal to or less than 0.56 m^3/t, the tank top may be overstressed unless the cargo is evenly spread across the tank top to equalize the weight distribution. Due consideration shall be given to ensure that the tank top is not overstressed during the voyage and during loading by a pile of the cargo.

Precautions
Persons who may be exposed to the dust of the cargo shall wear goggles or other equivalent dust eye-protection and dust filter masks, as necessary.

Ventilation
No special requirements.

Carriage
No special requirements.

Discharge
No special requirements.

Clean-up
No special requirements.

COKE

Description
Grey lumps may contain fines (Breeze).

Characteristics

Physical properties			
Size	**Angle of repose**	**Bulk density (kg/m^3)**	**Stowage factor (m^3/t)**
Up to 200 mm	Not applicable	341 to 800	1.25 to 2.93
Hazard classification			
Class	**Subsidiary hazard(s)**	**MHB**	**Group**
Not applicable	Not applicable	Not applicable	C

Hazard
No special hazards.
This cargo is non-combustible or has a low fire risk.

Stowage and segregation
No special requirements.

Hold cleanliness
No special requirements.

Weather precautions
No special requirements.

Loading
Trim in accordance with the relevant provisions required under sections 4 and 5 of this Code.

Precautions
Bilge wells shall be clean, dry and covered as appropriate, to prevent ingress of the cargo.

Ventilation
No special requirements.

Carriage
No special requirements.

Discharge
No special requirements.

Clean-up
After discharge of this cargo, the bilge wells and the scuppers of the cargo spaces shall be checked and any blockage in the bilge wells and the scuppers shall be removed.

COKE BREEZE

Description
Greyish powder.

Characteristics

Physical properties			
Size	**Angle of repose**	**Bulk density (kg/m^3)**	**Stowage factor (m^3/t)**
Less than 10 mm	Not applicable	556	1.80
Hazard classification			
Class	**Subsidiary hazard(s)**	**MHB**	**Group**
Not applicable	Not applicable	Not applicable	A

Hazard
This cargo may liquefy if shipped at a moisture content in excess of its transportable moisture limit (TML). See sections 7 and 8 of this Code.
This cargo is non-combustible or has a low fire risk.

Stowage and segregation
No special requirements.

Hold cleanliness
No special requirements.

Weather precautions
When a cargo is carried in a ship other than a ship complying with the requirements in 7.3.2 of this Code, the following provisions shall be complied with:

.1 the moisture content of the cargo shall be kept less than its TML during loading operations and the voyage;

.2 unless expressly provided otherwise in this individual schedule, the cargo shall not be handled during precipitation;

.3 unless expressly provided otherwise in this individual schedule, during handling of the cargo, all non-working hatches of the cargo spaces into which the cargo is loaded, or to be loaded, shall be closed;

.4 the cargo may be handled during precipitation under the conditions stated in the procedures required in 4.3.3 of this Code; and

.5 the cargo in a cargo space may be discharged during precipitation provided that the total amount of the cargo in the cargo space is to be discharged in the port.

Loading
Trim in accordance with the relevant provisions required under sections 4 and 5 of this Code.

Precautions
Bilge wells shall be clean, dry and covered as appropriate, to prevent ingress of the cargo.

Ventilation
The cargo spaces carrying this cargo shall not be ventilated during voyage.

Carriage
The appearance of the surface of this cargo shall be checked regularly during the voyage. If free water above the cargo or fluid state of the cargo is observed during the voyage, the master shall take appropriate actions to prevent cargo shifting and potential capsize of the ship, and give consideration to seeking emergency entry into a place of refuge.

Discharge
No special requirements.

Clean-up
After discharge of this cargo, the bilge wells and the scuppers of the cargo spaces shall be checked and any blockage in the bilge wells and the scuppers shall be removed.

COLEMANITE

Description
A natural hydrated calcium borate. Fine to lumps, light grey appearance similar to clay. Moisture approximately 7%.

Characteristics

Physical properties			
Size	**Angle of repose**	**Bulk density (kg/m^3)**	**Stowage factor (m^3/t)**
Up to 300 mm	Not applicable	1,639	0.61
Hazard classification			
Class	**Subsidiary hazard(s)**	**MHB**	**Group**
Not applicable	Not applicable	Not applicable	C

Hazard
No special hazards.
This cargo is non-combustible or has a low fire risk.

Stowage and segregation
No special requirements.

Hold cleanliness
No special requirements.

Weather precautions
No special requirements.

Loading
Trim in accordance with the relevant provisions required under sections 4 and 5 of this Code.

Precautions
No special requirements.

Ventilation
No special requirements.

Carriage
No special requirements.

Discharge
No special requirements.

Clean-up
No special requirements.

COPPER GRANULES

Description
Sphere-shaped pebbles. 75% copper with lead, tin, zinc, traces of others. Moisture content 1.5% approximately. Light grey colour when dry, dark green when wet. Odourless.

Characteristics

Physical properties			
Size	**Angle of repose**	**Bulk density (kg/m^3)**	**Stowage factor (m^3/t)**
Fines up to 10 mm Clinkers up to 50 mm	Not applicable	4,000 to 4,545	0.22 to 0.25
Hazard classification			
Class	**Subsidiary hazard(s)**	**MHB**	**Group**
Not applicable	Not applicable	Not applicable	C

Hazard
No special hazards.
This cargo is non-combustible or has a low fire risk.

Stowage and segregation
No special requirements.

Hold cleanliness
No special requirements.

Weather precautions
No special requirements.

Loading
Trim in accordance with the relevant provisions required under sections 4 and 5 of this Code.

As the density of the cargo is extremely high, the tank top may be overstressed unless the cargo is evenly spread across the tank top to equalize the weight distribution. Due consideration shall be given to ensure that the tank top is not overstressed during the voyage and during loading by a pile of the cargo.

Precautions
No special requirements.

Ventilation
No special requirements.

Carriage
No special requirements.

Discharge
No special requirements.

Clean-up
No special requirements.

COPPER MATTE

Description
Crude black copper ore. Composed of 75% copper and 25% impurities. Small metallic round stones or pellets. Odourless.

Characteristics

Physical properties			
Size	**Angle of repose**	**Bulk density (kg/m^3)**	**Stowage factor (m^3/t)**
3 mm to 25 mm	Not applicable	2,857 to 4,000	0.25 to 0.35
Hazard classification			
Class	**Subsidiary hazard(s)**	**MHB**	**Group**
Not applicable	Not applicable	Not applicable	C

Hazard
No special hazards.
This cargo is non-combustible or has a low fire risk.

Stowage and segregation
No special requirements.

Hold cleanliness
No special requirements.

Weather precautions
No special requirements.

Loading
Trim in accordance with the relevant provisions required under sections 4 and 5 of this Code.

As the density of the cargo is extremely high, the tank top may be overstressed unless the cargo is evenly spread across the tank top to equalize the weight distribution. Due consideration shall be given to ensure that the tank top is not overstressed during the voyage and during loading by a pile of the cargo.

Precautions
No special requirements.

Ventilation
No special requirements.

Carriage
No special requirements.

Discharge
No special requirements.

Clean-up
No special requirements.

COPPER SLAG

Description
Residue generated from copper smelting process. This cargo is highly permeable and pore water of this cargo drains quickly. It is black or red-brown in colour and either granular or lump.

Characteristics

Physical properties			
Size	**Angle of repose**	**Bulk density (kg/m^3)**	**Stowage factor (m^3/t)**
Up to 10 mm	Not applicable	1,500 to 2,500	0.40 to 0.67
Hazard classification			
Class	**Subsidiary hazard(s)**	**MHB**	**Group**
Not applicable	Not applicable	Not applicable	A

Hazard
This cargo may liquefy if shipped at a moisture content in excess of its transportable moisture limit (TML). See sections 7 and 8 of this Code. This cargo is abrasive.
This cargo is non-combustible and has a low fire risk.

Stowage and segregation
No special requirements.

Hold cleanliness
No special requirements.

Weather precautions
When a cargo is carried in a ship other than a ship complying with the requirements in 7.3.2 of this Code, the following provisions shall be complied with:

.1 the moisture content of the cargo shall be kept less than its TML during loading operations and the voyage;

.2 unless expressly provided otherwise in this individual schedule, the cargo shall not be handled during precipitation;

.3 unless expressly provided otherwise in this individual schedule, during handling of the cargo, all non-working hatches of the cargo spaces into which the cargo is loaded, or to be loaded, shall be closed;

.4 the cargo may be handled during precipitation under the conditions stated in the procedures required in 4.3.3 of this Code; and

.5 the cargo in a cargo space may be discharged during precipitation provided that the total amount of the cargo in the cargo space is to be discharged in the port.

Loading
This cargo shall be trimmed to ensure that the height difference between peaks and troughs does not exceed 5% of the ship's breadth and that the cargo slopes uniformly from the hatch boundaries to the bulkheads to avoid steep surfaces of cargo that could collapse during voyage.

When the stowage factor of this cargo is equal to or less than 0.56 m^3/t, the tank top may be overstressed unless the cargo is evenly spread across the tank top to equalize the weight distribution. Due consideration shall be given to ensure that the tank top is not overstressed during the voyage and during loading by a pile of the cargo.

Precautions
Appropriate action shall be taken to protect machinery and accommodation spaces from the dust of the cargo. Bilge wells of the cargo spaces shall be protected from ingress of the cargo.

Due consideration shall be given to protect equipment from the dust of the cargo.
Persons who may be exposed to the dust of the cargo shall wear protective clothing, goggles or other equivalent dust eye-protection and dust filter masks, as necessary.

Ventilation
No special requirements.

Carriage
Bilge water shall be removed regularly during the voyage. The appearance of the surface of this cargo shall be checked regularly during the voyage. If free water above the cargo or fluid state of the cargo is observed during the voyage, the master shall take appropriate actions to prevent cargo shifting and potential capsize of the ship, and give consideration to seeking emergency entry into a place of refuge.

Discharge
No special requirements.

Clean-up
No special requirements.

COPRA (dry) UN 1363

Description
Dried kernels of coconuts with a penetrating rancid odour which may taint other cargoes.

Characteristics

Physical properties			
Size	**Angle of repose**	**Bulk density (kg/m^3)**	**Stowage factor (m^3/t)**
Not applicable	Not applicable	500	2.00
Hazard classification			
Class	**Subsidiary hazard(s)**	**MHB**	**Group**
4.2	Not applicable		B

Hazard
Liable to heat and ignite spontaneously especially when in contact with water. Liable to cause oxygen depletion in the cargo space.

Stowage and segregation
This cargo shall not be stowed on or adjacent to heated surfaces, including fuel oil tanks.

Hold cleanliness
Clean and dry as relevant to the hazards of the cargo.

Weather precautions
This cargo shall be kept as dry as practicable. This cargo shall not be handled during precipitation. During handling of this cargo, all non-working hatches of the cargo spaces into which this cargo is loaded, or to be loaded, shall be closed.

Loading
Trim in accordance with the relevant provisions required under sections 4 and 5 of this Code. This cargo shall not be accepted for loading when wet.

Precautions
This cargo shall only be accepted for loading when the cargo has been weathered for at least one month before shipment or when the shipper provides the master with a certificate issued by a person recognized by the competent authority of the country of origin stating that the moisture content of the cargo is not more than 5%. Smoking and the use of naked lights in cargo spaces and adjacent areas shall be prohibited. Entry into the cargo space for this cargo shall not be permitted until the cargo space has been ventilated and the atmosphere tested for concentration of oxygen.*

Ventilation
Surface ventilation only, either natural or mechanical, shall be conducted, as necessary, during the voyage for this cargo.

Carriage
The temperature of this cargo shall be measured and recorded regularly during voyage to monitor for possible self-heating.

* Refer to Revised recommendations for entering enclosed spaces aboard ships (resolution A.1050(27)).

Discharge
No special requirements.

Clean-up
No special requirements.

Emergency procedures

Special emergency equipment to be carried Nil
Emergency procedures Nil **Emergency action in the event of fire** Batten down; use ship's fixed fire-fighting installation, if fitted. Exclusion of air may be sufficient to control fire. **Medical first aid** Refer to the *Medical First Aid Guide* (MFAG), as amended.

CRUSHED CARBON ANODES

Description
Crushed Carbon Anodes are spent carbon anodes that are crushed into smaller pieces to permit their shipment for recycling. Carbon anodes are used to introduce electricity into the aluminium smelter pots. This cargo is mainly composed of black crushed lumps and pieces principally containing carbon and other impurities. The material is odourless.

Characteristics

Physical properties			
Size	**Angle of repose**	**Bulk density (kg/m^3)**	**Stowage factor (m^3/t)**
Mainly coarse pieces up to 60 cm +	Not applicable	800 to 1,000	1.00 to 1.25
Hazard classification			
Class	**Subsidiary hazard(s)**	**MHB**	**Group**
Not applicable	Not applicable	Not applicable	C

Hazard
This cargo may generate dust.
This cargo is non-combustible or has a low fire risk.

Stowage and segregation
No special requirements.

Hold cleanliness
No special requirements.

Weather precautions
No special requirements.

Loading
Trim in accordance with the relevant provisions required under sections 4 and 5 of this Code.

Precautions
Persons who may be exposed to the dust of the cargo shall wear protective clothing, goggles or other equivalent dust eye-protection, dust filter masks and barrier creams as necessary.

Ventilation
No special requirements.

Carriage
No special requirements.

Discharge
No special requirements.

Clean-up
No special requirements.

CRYOLITE

Description
A fluoride of sodium and aluminium used in the production of aluminium and for ceramic glazes. Grey pellets.

Characteristics

Physical properties			
Size	**Angle of repose**	**Bulk density (kg/m^3)**	**Stowage factor (m^3/t)**
6.4 mm to 12.7 mm	Not applicable	1,429	0.70
Hazard classification			
Class	**Subsidiary hazard(s)**	**MHB**	**Group**
Not applicable	Not applicable	Not applicable	C

Hazard
Prolonged contact may cause serious damage to the skin and nervous system.
This cargo is non-combustible or has a low fire risk.

Stowage and segregation
No special requirements.

Hold cleanliness
No special requirements.

Weather precautions
No special requirements.

Loading
Trim in accordance with the relevant provisions required under sections 4 and 5 of this Code.

Precautions
Appropriate precautions shall be taken to protect machinery and accommodation spaces from the dust of the cargo. Bilge wells of the cargo spaces shall be protected from ingress of the cargo. Due consideration shall be given to protect equipment from the dust of the cargo. Persons who may be exposed to the dust of the cargo shall wear goggles or other equivalent dust eye-protection and dust filter masks. Those persons shall wear protective clothing, as necessary.

Ventilation
No special requirements.

Carriage
No special requirements.

Discharge
No special requirements.

Clean-up
No special requirements.

DIAMMONIUM PHOSPHATE (D.A.P.)

Description
Odourless white crystals or powder. Depending on source it can be dusty. Hygroscopic.

Characteristics

Physical properties			
Size	**Angle of repose**	**Bulk density (kg/m^3)**	**Stowage factor (m^3/t)**
Diameter: 2.54 mm	30° to 40°	833 to 999	1.10 to 1.20
Hazard classification			
Class	**Subsidiary hazard(s)**	**MHB**	**Group**
Not applicable	Not applicable	Not applicable	C

Hazard
No special hazards.
This cargo is hygroscopic and may harden in the cargo space under humid conditions.
This cargo is non-combustible or has a low fire risk.

Stowage and segregation
No special requirements.

Hold cleanliness
Clean and dry as relevant to the hazards of the cargo.

Weather precautions
This cargo shall be kept as dry as practicable. This cargo shall not be handled during precipitation. During handling of this cargo, all non-working hatches of the cargo spaces into which this cargo is loaded, or to be loaded, shall be closed.

Loading
Trim in accordance with the relevant provisions required under sections 4 and 5 of this Code.

Precautions
Appropriate precautions shall be taken to protect machinery and accommodation spaces from the dust of the cargo. Bilge wells of the cargo spaces shall be protected from ingress of the cargo. Due consideration shall be given to protect equipment from the dust of the cargo. Persons who may be exposed to the dust of the cargo shall wear protective clothing, goggles or other equivalent dust eye-protection and dust filter masks, as necessary.

Ventilation
The cargo spaces carrying this cargo shall not be ventilated during voyage.

Carriage
Condensation in the cargo spaces carrying this cargo, sweating of this cargo and entering of water from hatch covers to the cargo spaces shall be checked regularly during the voyage.

Due attention shall be given to the sealing of hatches of the cargo spaces.

Discharge
Diammonium phosphate is hygroscopic and may cake in overhangs, impairing safety during discharge. If this cargo has hardened, it shall be trimmed to avoid the formation of overhangs, as necessary.

Clean-up
After discharge of this cargo, particular attention shall be given to bilge wells of the cargo spaces.

DIRECT REDUCED IRON (A)
Briquettes, hot-moulded

Description
Direct reduced iron (DRI) (A) is a metallic grey material, moulded in a briquette form, emanating from a densification process whereby the DRI feed material is moulded at a temperature greater than 650°C and has a density greater than 5,000 kg/m^3. Fines and small particles (under 6.35 mm) shall not exceed 5% by weight.

Characteristics

Physical properties			
Size	**Angle of repose**	**Bulk density (kg/m^3)**	**Stowage factor (m^3/t)**
Approximate size: Length 50 mm to 140 mm Width 40 mm to 100 mm Thickness 20 mm to 50 mm Briquette weight 0.2 to 3.0 kg Fines and small particles: under 6.35 mm	Not applicable	2,500 to 3,300	0.30 to 0.40 To be verified by the shipper
Hazard classification			
Class	**Subsidiary hazard(s)**	**MHB**	**Group**
Not applicable	Not applicable	SH and/or WF	B

Hazard
Temporary increase in temperature of about 30°C due to self-heating may be expected after material handling in bulk. The material may slowly evolve hydrogen after contact with water (notably saline water). Hydrogen is a flammable gas that can form an explosive mixture when mixed with air in concentration above 4% by volume. It is liable to cause oxygen depletion in cargo spaces.
This cargo is non-combustible or has a low fire risk.

Stowage and segregation
"Separated from" goods of class 1 (division 1.4S), 2, 3, 4 and 5 and class 8 acids in packaged form (see IMDG Code).

"Separated from" solid bulk materials of classes 4 and 5.

"Separated longitudinally by an intervening complete compartment or hold from" goods of class 1 other than division 1.4S.

Boundaries of compartments where this cargo is carried shall be resistant to fire and passage of liquid.

Hold cleanliness
The cargo spaces shall be clean, dry and free from salt and residues of previous cargoes. Prior to loading, wooden fixtures such as battens, loose dunnage, debris and combustible materials shall be removed.

Weather precautions
This cargo shall be kept as dry as practicable during loading and the voyage. Open storage is acceptable prior to loading. This cargo shall not be loaded onto ships or transferred between ships or barges during precipitation. During loading of this cargo, all non-working hatches of the cargo spaces into which this cargo is loaded, or to be loaded, shall be kept closed. Only when weather permits, may non-working hatch covers be left open for a minimum of 1 hour after completion of each pour to allow cooling after cargo handling in bulk.

Loading
Prior to loading this cargo, the shipper shall provide the master with a certificate issued by a competent person recognized by the competent authority of the port of loading stating that the cargo, at the time of loading, is suitable for shipment and that it conforms with the requirements of this Code; that the quantity of fines and small particles (up to 6.35 mm in size) is no more than 5% by weight; the moisture content is less than 1.0% and the temperature does not exceed 65°C.

This cargo shall not be loaded when the temperature is in excess of 65°C, if its moisture content is in excess of 1.0% or if the quantity of fines and small particles (up to 6.35 mm in size) exceeds 5% by weight.

Appropriate precautions shall be taken during loading in order to have a cargo composed of essentially whole briquettes. The cargo shall be loaded in such a way so as to minimize breakage of briquettes and the additional generation of fines and small particles and concentration of fines in any area of the cargo. The addition of fines and particles less than 6.35 mm or dust in homogenous cargoes of briquettes shall be prohibited.

Trim in accordance with the relevant provisions required under sections 4 and 5 of this Code. Due consideration shall be given to evenly spreading the cargo across the tank top to minimize the concentration of fines.

The cargo temperature shall be monitored during loading and recorded in a log detailing the temperature for each lot of cargo loaded, a copy of which shall be provided to the master. After loading, a certificate, confirming that throughout the whole consignment the fines and small particles (under 6.35 mm in size) are less than 5% by weight, shall be issued by a competent person recognized by the competent authority of the port of loading.

As the density of the cargo is extremely high, the tank top may be overstressed unless the cargo is evenly spread across the tank top to equalize the weight distribution. Due consideration shall be given to ensure that the tank top is not overstressed during the voyage and during loading by a pile of the cargo.

Precautions
The carrier's nominated technical persons or other representatives shall have reasonable access to stockpiles and loading installations for inspection.

Shippers shall provide comprehensive information on the cargo and safety procedures to be followed in the event of emergency. The shipper may also provide advice in amplification of this Code but the advice shall not be contrary thereto in respect of safety.

Where practicable, ballast tanks adjacent to the cargo spaces containing this cargo, other than double-bottom tanks, shall be kept empty. Weather deck closures and hatch covers shall be inspected and tested to ensure integrity and weathertightness which shall be maintained throughout the voyage.

Appropriate precautions shall be taken to protect machinery, equipment and accommodation spaces from the dust of the cargo. Radars and exposed radiocommunication equipment of the ship shall be protected from the dust of this cargo. Bilge wells of the cargo spaces shall be clean, dry and protected from ingress of the cargo, using non-combustible material. Persons who may be exposed to the dust of the cargo shall wear protective clothing, goggles or other equivalent dust eye-protection and dust filter masks, as necessary.

During handling of this cargo, "NO SMOKING" signs shall be posted on decks and in areas adjacent to cargo spaces, and no naked lights shall be permitted in these areas.

Cargo spaces containing this cargo and adjacent spaces may become oxygen-depleted. Flammable gas may also build up in these spaces. All precautions shall be taken upon entering the cargo and adjacent spaces.*

Ventilation
Surface ventilation only, either natural or mechanical, shall be conducted, as necessary, during the voyage for this cargo. On no account shall air be directed into the body of the cargo. When mechanical ventilation is used, the fans shall be certified as explosion-proof and shall prevent any spark generation, thereby avoiding the possibility of ignition of hydrogen-air mixture. Suitable wire mesh guards shall be fitted over inlet and outlet ventilation openings. Ventilation shall be such that escaping gases cannot enter living quarters in hazardous concentrations.

Carriage
For quantitative measurements of hydrogen, a suitable detector shall be on board while this cargo is carried. The detector shall be suitable for use in an oxygen-depleted atmosphere and of a type certified safe for use in an explosive atmosphere. The concentrations of hydrogen in the cargo spaces carrying this cargo shall be measured regularly during the voyage, and the results of the measurements shall be recorded and kept on board for a minimum of two years. When the monitored hydrogen concentration is higher than 1% (> 25% lower explosive limit (LEL)) by volume, appropriate safety precautions shall be taken in accordance with those procedures provided by the shipper in case of emergency. If in doubt, expert advice shall be sought.

Bilge wells shall be checked regularly for the presence of water. If water is found, it shall be removed by pumping or draining the bilge wells.

The cargo temperature shall be taken regularly during the voyage and a record kept on board for a minimum of two years. If the temperature in the cargo space exceeds 65°C, appropriate safety precautions shall be taken in accordance with the procedures provided by the shipper in case of emergency. If in doubt, expert advice shall be sought.

Discharge
The hydrogen concentration in the cargo space shall be measured immediately before any opening action of the hatch covers. If the hydrogen concentration is greater than 1% (> 25% lower explosive limit (LEL)) by volume, all appropriate safety precautions in conformity with the procedures provided by the shipper or the recommendations of the competent authority shall be taken. If in doubt, expert advice shall be sought.

During discharge, a fine spray of fresh water may be applied to this cargo, for dust control, only when the cargo will be stored in an open area. It is not recommended to apply a fine spray of fresh water to this cargo when it will be stored in an enclosed space or is to be transhipped.

* Refer to *Revised recommendations for entering enclosed spaces aboard ships* (resolution A.1050(27)).

Clean-up

Accumulations of dust from this cargo on deck or in proximity to cargo spaces shall be removed as quickly as possible. Consideration shall be given to carefully cleaning exposed radiocommunication equipment to which dust from the cargo might adhere, such as radar, radio aerials, VHF installations, AIS and GPS. Hosing with seawater shall be avoided**.**

Emergency procedures

Special emergency equipment to be carried

Nil

Emergency procedures

Nil

Emergency action in the event of fire

Do not use water. **Do not use steam. Do not use CO_2**.

Batten down.

The specific procedures in the event of emergency provided by the shipper should be consulted and followed, as appropriate. If in doubt, expert advice should be sought as quickly as possible.

Preparations should be made for grab discharge if serious heating occurs.

Medical first aid

Refer to the *Medical First Aid Guide* (MFAG), as amended.

DIRECT REDUCED IRON (B)
Lumps, pellets, cold-moulded briquettes

Description
Direct reduced iron (DRI) (B) is a highly porous, black/grey metallic material formed by the reduction (removal of oxygen) of iron oxide at temperatures below the fusion point of iron. Cold-moulded briquettes are defined as those which have been moulded at a temperature less than 650°C or which have a density of less than 5,000 kg/m^3. Fines and small particles under 6.35 mm in size shall not exceed 5% by weight.

Characteristics

Physical properties			
Size	**Angle of repose**	**Bulk density (kg/m^3)**	**Stowage factor (m^3/t)**
Lumps and pellets: Average particle size 6.35 mm to 25 mm. Cold-moulded briquettes: Approximate maximum dimensions 35 mm to 40 mm. Fines and small particles: Under 6.35 mm up to 5% by weight.	Not applicable	1,750 to 2,000	0.50 to 0.57
Hazard classification			
Class	**Subsidiary hazard(s)**	**MHB**	**Group**
Not applicable	Not applicable	SH and/or WF	B

Hazard
Temporary increase in temperature of about 30°C due to self-heating may be expected after material handling in bulk.

There is a risk of overheating, fire and explosion during transport. This cargo reacts with air and with fresh water or seawater to produce heat and hydrogen. Hydrogen is a flammable gas that can form an explosive mixture when mixed with air in concentrations above 4% by volume. The reactivity of this cargo depends upon the origin of the ore, the process and temperature of reduction, and the subsequent ageing procedures. Cargo heating may generate very high temperatures that are sufficient to ignite the cargo. Build-up of fines may also lead to self-heating, auto-ignition and explosion. Oxygen in cargo spaces and enclosed spaces may be depleted.

Stowage and segregation
"Separated from" goods of classes 1 (division 1.4S), 2, 3, 4 and 5, and class 8 acids in packaged form (See IMDG Code).

"Separated from" solid bulk materials of classes 4 and 5.

Goods of class 1, other than division 1.4S, shall not be carried in the same ship.

Boundaries of compartments where this cargo is carried shall be resistant to fire and passage of liquid.

Hold cleanliness
The cargo spaces shall be clean, dry and free from salt and residues of previous cargoes. Prior to loading, wooden fixtures such as battens, loose dunnage, debris and combustible materials shall be removed.

Weather precautions
The cargo shall be kept dry at all times during storage, before and during loading, and during transportation. The cargo shall not be loaded onto ships, or transferred between ships or barges, during precipitation. During loading of this cargo, all non-working hatches of cargo spaces into which this cargo is loaded, or to be loaded, shall be kept closed.

Loading
Prior to loading, the terminal shall ensure that the conveyor belts used for loading this cargo contain no accumulation of water or other substances. Each time cargo operations are commenced or restarted, particularly after rain or washing down, any loading belt shall be operated empty and not over a ship's cargo space.

Prior to loading, an ultrasonic test or another equivalent method with a suitable instrument shall be conducted to ensure weathertightness of the hatch covers and closing arrangements and all readings shall confirm weathertightness.

Prior to loading this cargo, the shipper shall provide the master with a certificate issued by a competent person recognized by the competent authority of the port of loading stating that the cargo, at the time of loading, is suitable for shipment, and that it conforms with the requirements of this Code; that the quantity of fines and small particles is no more than 5% by weight; that the moisture content is less than 0.3%; and that the temperature does not exceed 65°C. This certificate shall state the date of manufacture for each lot of cargo to be loaded in order to meet the loading criteria with regard to ageing and material temperature.

The cargo shall not be accepted for loading when its temperature is in excess of 65°C or if its moisture content is in excess of 0.3% or if the quantity of fines and small particles exceeds 5% by weight. Any cargo that has been wetted, or is known to have been wetted, shall not be loaded into any cargo space.

Prior to loading, provision shall be made to introduce a dry, inert gas at tank top level so that the inert gas purges the air from the cargo and fills the free volume above. Nitrogen is preferred for this purpose. All vents, accesses and other openings, such as coaming drains, that could allow the inert atmosphere to be lost from cargo spaces carrying this cargo shall be closed and sealed.

The cargo shall be loaded in such a way as to minimize both the breakage of the cold-moulded briquettes, pellets, lumps and the additional generation of fines and the concentrating of fines in any area of the cargo. This cargo shall be homogenous, with no added waste. The addition of DRI particles, fines or dust in this cargo shall be prohibited.

Due consideration shall be given to evenly spreading the cargo across the tank top to minimize the concentration of fines. Trim in accordance with the relevant provisions required under sections 4 and 5 of this Code.

When the stowage factor of this cargo is equal to or less than 0.56 m^3/t, the tank top may be overstressed unless the cargo is evenly spread across the tank top to equalize the weight distribution. Due consideration shall be given to ensure that the tank top is not overstressed during the voyage and during loading by a pile of the cargo.

The cargo temperature and moisture shall be monitored during loading and recorded in a log detailing the temperature and moisture for each lot of cargo loaded, a copy of which shall be provided to the master. After loading, a certificate shall be issued by a competent person recognized by the competent authority of the port of loading, confirming that, throughout the whole consignment, fines and small particles (under 6.35 mm size) are less than 5% by weight, that the moisture content has not exceeded 0.3% and the temperature does not exceed 65°C.

On completion of loading of a cargo space, it shall be immediately closed and sealed. Sufficient inert gas shall then be introduced to achieve an oxygen concentration less than 5% throughout the cargo space.

Precautions

Due consideration shall be given to the possibility of moisture inside the cargo pile in order to avoid loading of wet cargo or a wet part of the cargo, recognizing that the bottom of the pile can be wet even though the surface of cargo pile looks dry. The carrier's nominated technical persons or other representatives shall have reasonable access to stockpiles and loading installations for inspection.

Prior to shipment, the cargo shall be aged for at least 3 days, or treated with an air-passivation technique, or another equivalent method, that reduces the reactivity to the same level as the aged product. Such ageing process shall be approved by the competent authority that shall also provide a certificate to that effect.

Shippers shall provide comprehensive information on the cargo and safety procedures to be followed in the event of emergency. This advice may be an amplification of this Code, but shall not be contrary thereto in respect of safety.

Where practicable, ballast tanks adjacent to the cargo spaces containing this cargo, other than double-bottom tanks, shall be kept empty. Weathertightness shall be maintained throughout the voyage. Bilge wells of the cargo spaces shall be clean, dry and protected from ingress of the cargo, using non-combustible material.

Due consideration shall be given to protecting equipment, machinery and accommodation spaces from the dust of the cargo. Radars and exposed radiocommunication equipment of ships which carry this cargo shall be protected from the dust of this cargo. Persons who may be exposed to the dust of the cargo shall wear protective clothing, goggles or other equivalent dust eye-protection and dust filter masks, as necessary.

During any handling of this cargo, "NO SMOKING" signs shall be posted on decks and in areas adjacent to cargo spaces, and no naked lights shall be permitted in these areas. Smoking, burning, cutting, chipping, grinding or other sources of ignition shall not be allowed in the vicinity of cargo spaces containing this cargo at any time.

Cargo spaces containing this cargo and adjacent spaces may become oxygen-depleted. Flammable gas may also build up in these spaces. All precautions shall be taken when entering the cargo spaces.*

The ship shall be provided with the means to ensure that the requirement of this Code to maintain the oxygen concentration below 5% can be achieved throughout the voyage. The ship's fixed CO_2 fire-fighting system shall not be used for this purpose. Consideration shall be given to providing the vessel with the means to top up the cargo spaces with additional supplies of inert gas, taking into account the duration of the voyage.

The ship shall be provided with the means for reliably measuring the temperatures at several points within the stow, and determining the concentrations of hydrogen and oxygen in the cargo

* Refer to *Revised recommendations for entering enclosed spaces aboard ships* (resolution A.1050(27)).

space atmosphere on voyage whilst minimizing as far as practicable the loss of the inert atmosphere.

Any cargo that has already been loaded into a cargo space and which subsequently becomes wetted, or in which reactions have started, shall be discharged without delay.

The ship shall not sail until the master and a competent person recognized by the competent authority of the port of loading are satisfied:

.1 that all loaded cargo spaces are correctly sealed and inerted;

.2 that the temperature of the cargo has stabilized at all measuring points and that the temperature does not exceed 65°C; and

.3 that, at the end of the inerting process, the concentration of hydrogen in the free space of the holds has stabilized and does not exceed 0.2% by volume.

Ventilation
The cargo spaces carrying this cargo shall remain tightly sealed and the inert condition maintained during the voyage.

Carriage
For quantitative measurements of hydrogen and oxygen, suitable detectors shall be on board while this cargo is carried. The detectors shall be suitable for use in an oxygen-depleted atmosphere and of a type certified safe for use in explosive atmospheres. The concentrations of hydrogen and oxygen in the cargo spaces carrying this cargo shall be measured at regular intervals during voyage, and the results of the measurements shall be recorded and kept on board for a minimum of two years.

The oxygen concentration in the cargo spaces carrying this cargo shall be maintained at less than 5% throughout the duration of the voyage. When the monitored hydrogen concentration is higher than 1% (> 25% lower explosive limit (LEL)) by volume, appropriate safety precautions shall be taken in accordance with those procedures provided by the shipper in the event of emergency. If in doubt, expert advice shall be sought.

Cargo temperatures shall be taken at regular intervals during voyage and the results of the measurements shall be recorded and kept on board for a minimum of two years. If the temperature in the cargo space exceeds 65°C, appropriate safety precautions shall be taken in accordance with the procedures provided by the shipper in the event of emergency. If in doubt, expert advice shall be sought.

Bilge wells shall be checked regularly for the presence of water. If water is found, it shall be removed by pumping or draining the bilge wells. Consideration shall be given to increasing the frequency of cargo monitoring following periods of bad weather. All measurements shall be taken so as to minimize as far as practicable the loss of inert gas from the cargo spaces.

Discharge
The hydrogen concentration in the cargo space shall be measured immediately before any opening action of the hatch covers. If the hydrogen concentration is greater than 1% (> 25% lower explosive limit (LEL)) by volume, all appropriate safety precautions in conformity with the procedures provided by the shipper or the recommendations of the competent authority shall be taken. If in doubt, expert advice shall be sought.
During precipitation, all cargo operations shall be suspended and holds containing cargo shall be closed. Monitoring for hydrogen in those holds containing cargo shall be resumed.

Clean-up

Accumulations of dust from this cargo on deck or in proximity to cargo spaces shall be removed as quickly as possible. Hosing with seawater shall be avoided. Consideration shall be given to carefully cleaning exposed radiocommunication equipment to which dust from the cargo might adhere, such as radar, radio aerials, VHF installations, AIS and GPS.

Emergency procedures

Special emergency equipment to be carried

Nil

Emergency procedures

Nil

Emergency action in the event of fire

In the event of emergency, the specific procedures provided by the shipper should be consulted and followed, as appropriate.

Do not use CO_2. Do not use water. Do not use steam.

Batten down and reinstate the inert atmosphere using supplies or equipment if available on board. Increase the frequency of monitoring. If temperature and/or hydrogen concentration steadily rise, seek expert advice as quickly as possible.

If the temperature in the cargo space exceeds 120°C, the ship should make for the nearest appropriate port to discharge the cargo affected. Preparations should be made for grab discharge.

If additional nitrogen gas is available, the use of this gas will assist in keeping the oxygen concentration down and may contain the fire and prevent an explosive atmosphere if hydrogen is produced.

Flooding with water of the affected cargo hold should only be contemplated as a last resort, always taking the stability and strength of the ship into account.

Medical first aid

Refer to the *Medical First Aid Guide* (MFAG), as amended.

DIRECT REDUCED IRON (C)
(By-product fines)

Description
Direct reduced iron (DRI) (C) is a porous, black/grey metallic material generated as a by-product of the manufacturing and handling processes of DRI (A) and/or DRI (B). The density of DRI (C) is less than 5,000 kg/m^3.

Characteristics

Physical properties			
Size	**Angle of repose**	**Bulk density (kg/m^3)**	**Stowage factor (m^3/t)**
Fines and small particles with an average size less than 6.35 mm, no particles to exceed 12 mm	Not applicable	1,850 to 3,300	0.30 to 0.54
Hazard classification			
Class	**Subsidiary hazard(s)**	**MHB**	**Group**
Not applicable	Not applicable	SH and/or WF	B

Hazard
Temporary increase in temperature of about 30°C due to self-heating may be expected after material handling in bulk.

There is a risk of overheating, fire and explosion during transport. This cargo reacts with air and with fresh water or seawater, to produce hydrogen and heat. Hydrogen is a flammable gas that can form an explosive mixture when mixed with air in concentrations above 4% by volume. Cargo heating may generate very high temperatures that are sufficient to lead to self-heating, auto-ignition and explosion.

Oxygen in cargo spaces and in enclosed adjacent spaces may be depleted. Flammable gas may also build up in these spaces. All precautions shall be taken when entering cargo and enclosed adjacent spaces.

The reactivity of this cargo is extremely difficult to assess due to the nature of the material that can be included in the category. A worst case scenario should therefore be assumed at all times.

Stowage and segregation
"Separated from" goods of classes 1 (division 1.4S), 2, 3, 4 and 5, and class 8 acids in packaged form (see IMDG Code).

"Separated from" solid bulk materials of classes 4 and 5.

Goods of class 1, other than division 1.4S, shall not be carried in the same ship. Boundaries of compartments where this cargo is carried shall be resistant to fire and passage of liquid.

Hold cleanliness
Cargo spaces shall be clean, dry and free of salt and residues of previous cargoes. Prior to loading, wooden fixtures such as battens, loose dunnage, debris and combustible materials shall be removed.

Weather precautions
The cargo shall be kept within the permissible moisture content indicated in this schedule at all times during loading, and during transportation.

This cargo shall not be loaded onto ships, or transferred between ships or barges, during ANY precipitation. During loading of this cargo, all non-working hatches of cargo spaces into which this cargo is loaded, or to be loaded, shall be kept closed.

Loading
Prior to loading, the terminal shall ensure that the conveyor belts and all other equipment used for loading this cargo contain no accumulation of water or other substances. Each time cargo operations are commenced or restarted, particularly after rain or washing down, any loading belt shall be operated empty and not over a ship's cargo space.

Prior to loading, an ultrasonic test or another equivalent method with a suitable instrument shall be conducted to ensure weathertightness of the hatch covers and closing arrangements and all readings shall confirm weathertightness.

Prior to loading this cargo, the shipper shall provide the master with a certificate issued by a competent person recognized by the competent authority of the port of loading stating that the cargo, at the time of loading, is suitable for shipment; that it conforms with the requirements of this Code; that the moisture content is less than 0.3%; and the temperature does not exceed 65°C. This certificate shall state that the cargo meets the loading criteria with regard to ageing and material temperature.

The cargo shall not be accepted for loading when its temperature is in excess of 65°C or if its moisture content is in excess of 0.3%. Any cargo that has been wetted, or is known to have been wetted, shall not be loaded into any cargo space.

Trim in accordance with the relevant provisions required under sections 4 and 5 of this Code.

As the density of the cargo is extremely high, the tank top may be overstressed unless the cargo is evenly spread across the tank top to equalize the weight distribution. Due consideration shall be given to ensure that the tank top is not overstressed during the voyage and during loading by a pile of the cargo.

The cargo temperature shall be monitored during loading and recorded in a log detailing the temperature for each lot of cargo loaded, a copy of which shall be provided to the master. After loading, a certificate shall be issued by a competent person recognized by the competent authority of the port of loading confirming that throughout the whole consignment of fines and small particles the moisture content has not exceeded 0.3% and the temperature does not exceed 65°C.

On completion of loading of a cargo space, it shall be immediately closed and sealed. Sufficient inert gas shall then be introduced to achieve an oxygen concentration less than 5% throughout the cargo space.

Precautions
Due consideration shall be given to the possibility of moisture inside the cargo pile in order to avoid loading of wet cargo or a wet part of the cargo, recognizing that the bottom of the pile can be wet even though the surface of cargo pile looks dry. The carrier's nominated technical persons or other representatives shall have reasonable access to stockpiles and loading installations for inspection.

Prior to shipment, the cargo shall be aged for at least 30 days and a certificate confirming this shall be issued by a competent person recognized by the competent authority of the port of loading.

Shippers shall provide to the master, prior to loading, comprehensive information on the cargo and safety procedures to be followed in the event of emergency. This advice may be an amplification of this Code, but shall not be contrary thereto in respect of safety.

Where practicable, ballast tanks adjacent to the cargo spaces containing this cargo, other than double-bottom tanks, shall be kept empty. Weathertightness shall be maintained throughout the voyage. Bilge wells of the cargo spaces shall be clean, dry and protected from ingress of the cargo, using non-combustible material. The introduction of moisture and accumulation of condensation in the cargo spaces shall be avoided.

Appropriate precautions shall be taken to protect equipment, machinery and accommodation spaces from the dust of the cargo. Radars and exposed radiocommunication equipment of ships which carry this cargo shall be protected from the dust of this cargo. Persons who may be exposed to the dust of the cargo shall wear protective clothing, goggles or other equivalent dust eye-protection and dust filter masks, as necessary.

During any handling of this cargo, "NO SMOKING" signs shall be posted on decks and in areas adjacent to cargo spaces, and no naked light shall be permitted in these areas. Smoking, burning, cutting, chipping, grinding or other sources of ignition shall not be allowed in the vicinity of cargo spaces containing this cargo at any time.

Cargo spaces containing this cargo and adjacent spaces may become oxygen-depleted. No person shall enter a loaded cargo space or an enclosed adjacent space unless the space has been ventilated and the atmosphere tested and found to be gas-free and have sufficient oxygen to support life.[*] Notwithstanding, emergency entry may be permitted without ventilation, testing, or both provided that the entry into the space is undertaken only by trained personnel wearing self-contained breathing apparatus under the supervision of a responsible officer and no source of ignition is introduced into the space.

Prior to loading, provision shall be made to introduce a dry, inert gas at tank top level so that the inert gas purges the air from the cargo and fills the free volume above. Nitrogen is preferred for this purpose. All vents, accesses and other openings, such as coaming drains, that could allow the inert atmosphere to be lost from cargo spaces carrying this cargo shall be closed and sealed.

The ship shall be provided with the means to ensure that a requirement of this Code to maintain the oxygen concentration below 5% can be achieved and maintained throughout the voyage. The ship's fixed CO_2 fire-fighting system shall not be used for this purpose. Consideration shall be given to providing the vessel with the means to top up the cargo spaces with additional supplies of inert gas, taking into account the duration of the voyage.

The ship shall be provided with the means for reliably measuring the temperatures at several points within the stow and determining the concentrations of hydrogen and oxygen in the cargo space atmosphere on voyage. Appropriate precautions shall be taken to minimize, as far as practicable, the loss of the inert atmosphere.

[*] Refer to *Revised recommendations for entering enclosed spaces aboard ships* (resolution A.1050(27)).

Any cargo that has already been loaded into a cargo space and which subsequently is exposed to additional fresh water or seawater over its natural moisture content and becomes wetted, or in which reactions have started and its temperature has exceeded 120ºC, shall be discharged without delay.

On completion of loading of a cargo space, it shall be immediately closed and sealed. Sufficient inert gas shall then be introduced to achieve an oxygen concentration less than 5% throughout the cargo space.

The ship shall not sail until the master and a competent person recognized by the competent authority of the port of loading are satisfied:

.1 that all loaded cargo spaces are correctly sealed and inerted;

.2 that the temperature of the cargo has stabilized at all measuring points and that the temperature does not exceed 65ºC; and

.3 that at the end of the inerting process, the concentration of hydrogen in the free space of the holds has stabilized and does not exceed 0.2% by volume.

Ventilation
The cargo spaces carrying this cargo shall remain tightly sealed and the inert condition maintained during the voyage.

Carriage
For quantitative measurements of hydrogen and oxygen, suitable detectors shall be on board while this cargo is carried. The detectors shall be suitable for use in an oxygen-depleted atmosphere and of a type certified safe for use in explosive atmospheres. The concentrations of hydrogen and oxygen in the cargo spaces carrying this cargo shall be measured at regular intervals during voyage, and the results of the measurements shall be recorded and kept on board for a minimum of two years.

The oxygen concentration in the cargo spaces carrying this cargo shall be maintained at less than 5% throughout the duration of the voyage by topping up with inert gas.

Cargo temperatures shall be taken at regular intervals during the voyage and the results of the measurements shall be recorded and kept on board for a minimum of two years. If the temperature in the cargo space exceeds 65°C or the monitored hydrogen concentration exceeds 1% (> 25% lower explosive limit (LEL)) by volume, appropriate safety precautions shall be taken in accordance with the procedures provided by the shipper in the event of emergency. If in doubt, expert advice shall be sought.

Bilge wells shall be checked regularly for the presence of water. If water is found, it shall be removed by pumping or draining the bilge wells. Consideration shall be given to increasing the frequency of cargo monitoring following periods of bad weather. All measurements shall be taken so as to minimize, as far as practicable, the loss of inert gas from the cargo spaces.

Discharge
The hydrogen concentration in the cargo space shall be measured immediately before any opening action of the hatch covers. If the hydrogen concentration is greater than 1% (> 25% lower explosive limit (LEL)) by volume, all appropriate safety precautions in conformity with the procedures provided by the shipper or the recommendations of the competent authority shall be taken. If in doubt, expert advice shall be sought.

During precipitation, all cargo operations shall be suspended and holds containing cargo shall be closed. Monitoring for hydrogen of those holds containing cargo shall be resumed.

Clean-up
Accumulations of dust from this cargo on deck or in proximity to cargo spaces shall be removed as quickly as possible. Hosing with seawater shall be avoided. Consideration shall be given to carefully cleaning exposed radiocommunication equipment to which dust from the cargo might adhere, such as radar, radio aerials, VHF installations, AIS and GPS.

Emergency procedures

Special emergency equipment to be carried
Nil

Emergency procedures
Nil

Emergency action in the event of fire
In the event of emergency, the specific procedures provided by the shipper should be consulted and followed, as appropriate.

Do not use CO_2. Do not use water. Do not use steam.

Batten down and reinstate the inert atmosphere using supplies or equipment if available on board. Increase the frequency of monitoring. If temperature and/or hydrogen concentration steadily rise, seek expert advice as quickly as possible.

If the temperature in the cargo space exceeds 120°C, the ship should make for the nearest appropriate port to discharge the cargo affected. Preparations should be made for grab discharge.

If additional nitrogen gas is available, the use of this gas will assist in keeping the oxygen concentration down and may contain the fire and prevent an explosive atmosphere if hydrogen is produced.

Flooding with water of the affected cargo hold should only be contemplated as a last resort, always taking the stability and strength of the ship into account.

Medical first aid
Refer to the *Medical First Aid Guide* (MFAG), as amended.

DISTILLERS DRIED GRAINS WITH SOLUBLES

Description
A dried blend of coarse grains and condensed distillers solubles that remain after the fermentation of the starch fraction of corn with yeasts and enzymes to produce ethanol and carbon dioxide. Yellowish brown in colour with a cooked corn odour. Moisture content not more than 13% and oil content not more than 11%. This schedule is not applicable to wet distillers grain (WDG) and distillers dried grain (DDG), which are not transported in bulk.

Characteristics

Physical properties			
Size	**Angle of repose**	**Bulk density (kg/m^3)**	**Stowage factor (m^3/t)**
Not applicable	Not applicable	450 to 520	1.92 to 2.22
Hazard classification			
Class	**Subsidiary hazard(s)**	**MHB**	**Group**
Not applicable	Not applicable	Not applicable	C

Hazard
No special hazards.
This cargo is non-combustible or has a low fire risk.

Stowage and segregation
No special requirements.

Hold cleanliness
Clean and dry as relevant to the hazards of the cargo.

Weather precautions
This cargo shall be kept as dry as practicable. This cargo shall not be handled during precipitation. During handling of this cargo, all non-working hatches of the cargo spaces into which this cargo is loaded, or to be loaded, shall be closed.

Loading
Load in open unconfined areas. Trim in accordance with the relevant provision required under sections 4 and 5 of this Code.

Precautions
No special requirements.

Ventilation
No special requirements.

Carriage
Hatches of the cargo spaces carrying this cargo shall be weathertight to prevent the ingress of water.

Discharge
If this cargo has hardened, it shall be trimmed to avoid the formation of overhanging faces, as necessary.

Clean-up
No special requirements.

DOLOMITE

Description
Dolomite is a light yellow/brown coloured mineral stone which is very hard and compact. Dolomite may sometimes, incorrectly, be used to describe a material consisting of the oxides of calcium and magnesium (dolomitic quicklime). In this case, see "LIME (UNSLAKED)".

Characteristics

Physical properties			
Size	**Angle of repose**	**Bulk density (kg/m^3)**	**Stowage factor (m^3/t)**
Up to 32 mm	Not applicable	1,429 to 1,667	0.60 to 0.70
Hazard classification			
Class	**Subsidiary hazard(s)**	**MHB**	**Group**
Not applicable	Not applicable	Not applicable	C

Hazard
No special hazards.
This cargo is non-combustible or has a low fire risk.

Stowage and segregation
No special requirements.

Hold cleanliness
No special requirements.

Weather precautions
No special requirements.

Loading
Trim in accordance with the relevant provisions required under sections 4 and 5 of this Code.

Precautions
No special requirements.

Ventilation
No special requirements.

Carriage
No special requirements.

Discharge
No special requirements.

Clean-up
No special requirements.

FELSPAR LUMP

Description
Crystalline minerals consisting of silicates of aluminium with potassium sodium, calcium and barium. White or reddish in colour.

Characteristics

Physical properties			
Size	**Angle of repose**	**Bulk density (kg/m^3)**	**Stowage factor (m^3/t)**
0.1 mm to 300 mm	Not applicable	1,667	0.60
Hazard classification			
Class	**Subsidiary hazard(s)**	**MHB**	**Group**
Not applicable	Not applicable	Not applicable	C

Hazard
No special hazards.
This cargo is non-combustible or has a low fire risk.

Stowage and segregation
No special requirements.

Hold cleanliness
No special requirements.

Weather precautions
No special requirements.

Loading
Trim in accordance with the relevant provisions required under sections 4 and 5 of this Code.

Precautions
No special requirements.

Ventilation
No special requirements.

Carriage
No special requirements.

Discharge
No special requirements.

Clean-up
No special requirements.

FERROCHROME

Description
Raw material of iron mixed with chrome. Extremely heavy cargo.

Characteristics

Physical properties			
Size	**Angle of repose**	**Bulk density (kg/m^3)**	**Stowage factor (m^3/t)**
Up to 300 mm	Not applicable	3,571 to 5,556	0.18 to 0.28
Hazard classification			
Class	**Subsidiary hazard(s)**	**MHB**	**Group**
Not applicable	Not applicable	Not applicable	C

Hazard
No special hazards.
This cargo is non-combustible or has a low fire risk.

Stowage and segregation
No special requirements.

Hold cleanliness
No special requirements.

Weather precautions
No special requirements.

Loading
Trim in accordance with the relevant provisions required under sections 4 and 5 of this Code.

As the density of the cargo is extremely high, the tank top may be overstressed unless the cargo is evenly spread across the tank top to equalize the weight distribution. Due consideration shall be given to ensure that the tank top is not overstressed during the voyage and during loading by a pile of the cargo.

Precautions
No special requirements.

Ventilation
No special requirements.

Carriage
No special requirements.

Discharge
No special requirements.

Clean-up
No special requirements.

FERROCHROME, exothermic

Description
An alloy of iron and chromium. Extremely heavy cargo.

Characteristics

Physical properties			
Size	**Angle of repose**	**Bulk density (kg/m^3)**	**Stowage factor (m^3/t)**
Up to 300 mm	Not applicable	3,571 to 5,556	0.18 to 0.28
Hazard classification			
Class	**Subsidiary hazard(s)**	**MHB**	**Group**
Not applicable	Not applicable	Not applicable	C

Hazard
No special hazards.
This cargo is non-combustible or has a low fire risk.

Stowage and segregation
No special requirements.

Hold cleanliness
No special requirements.

Weather precautions
No special requirements.

Loading
Trim in accordance with the relevant provisions required under sections 4 and 5 of this Code.

As the density of the cargo is extremely high, the tank top may be overstressed unless the cargo is evenly spread across the tank top to equalize the weight distribution. Due consideration shall be given to ensure that the tank top is not overstressed during the voyage and during loading by a pile of the cargo.

Precautions
During loading, carriage and discharging, welding or other hot work shall not be carried out in the vicinity of the cargo spaces containing this cargo.

Ventilation
No special requirements.

Carriage
No special requirements.

Discharge
No special requirements.

Clean-up
No special requirements.

FERROMANGANESE

Description
Raw material or iron mixed with manganese.

Characteristics

Physical properties			
Size	**Angle of repose**	**Bulk density (kg/m^3)**	**Stowage factor (m^3/t)**
Up to 300 mm	Not applicable	3,571 to 5,556	0.18 to 0.28
Hazard classification			
Class	**Subsidiary hazard(s)**	**MHB**	**Group**
Not applicable	Not applicable	Not applicable	C

Hazard
No special hazards.
This cargo is non-combustible or has a low fire risk.

Stowage and segregation
No special requirements.

Hold cleanliness
No special requirements.

Weather precautions
No special requirements.

Loading
Trim in accordance with the relevant provisions required under sections 4 and 5 of this Code.

As the density of the cargo is extremely high, the tank top may be overstressed unless the cargo is evenly spread across the tank top to equalize the weight distribution. Due consideration shall be given to ensure that the tank top is not overstressed during the voyage and during loading by a pile of the cargo.

Precautions
No special requirements.

Ventilation
No special requirements.

Carriage
No special requirements.

Discharge
No special requirements.

Clean-up
No special requirements.

FERRONICKEL

Description
An alloy of iron and nickel.

Characteristics

Physical properties			
Size	**Angle of repose**	**Bulk density (kg/m^3)**	**Stowage factor (m^3/t)**
Up to 300 mm	Not applicable	4,167	0.24
Hazard classification			
Class	**Subsidiary hazard(s)**	**MHB**	**Group**
Not applicable	Not applicable	Not applicable	C

Hazard
No special hazards.
This cargo is non-combustible or has a low fire risk.

Stowage and segregation
No special requirements.

Hold cleanliness
No special requirements.

Weather precautions
No special requirements.

Loading
Trim in accordance with the relevant provisions required under sections 4 and 5 of this Code.

As the density of the cargo is extremely high, the tank top may be overstressed unless the cargo is evenly spread across the tank top to equalize the weight distribution. Due consideration shall be given to ensure that the tank top is not overstressed during the voyage and during loading by a pile of the cargo.

Precautions
No special requirements.

Ventilation
No special requirements.

Carriage
No special requirements.

Discharge
No special requirements.

Clean-up
No special requirements.

FERRONICKEL SLAG (granulated)

Description
The slag is a by-product from smelting and refining of iron ore and nickel ore in electric furnace. It is granulated by air or water cooling. This cargo is mainly composed of magnesium silicate, and the composition is similar to natural sand. The colour can be pale greenish, grey to brownish.

Characteristics

Physical properties			
Size	**Angle of repose**	**Bulk density (kg/m^3)**	**Stowage factor (m^3/t)**
Up to 5 mm	36° to 56°	1,100 to 1,730	0.58 to 0.91
Hazard classification			
Class	**Subsidiary hazard(s)**	**MHB**	**Group**
Not applicable	Not applicable	Not applicable	C

Hazard
No special hazard.
The cargo is non-combustible or has a low fire risk.

Stowage and segregation
No special requirements.

Hold cleanliness
No special requirements.

Weather precautions
No special requirements.

Loading
Trim in accordance with the relevant provisions required under sections 4 and 5 of this Code.

Precautions
Appropriate precautions shall be taken to protect machinery and accommodation spaces from the dust of the cargo. Bilge wells of the cargo spaces shall be protected from ingress of the cargo. Due consideration shall be given to protect equipment from the dust of the cargo. Persons who may be exposed to the dust of the cargo shall wear protective clothing, safety glasses or other equivalent dust eye-protection and dust filter masks, as necessary.

Ventilation
No special requirements.

Carriage
No special requirements.

Discharge
No special requirements.

Clean-up
No special requirements.

FERROPHOSPHORUS
(including briquettes)

Description
An alloy of iron and phosphorus used in the steel industry.

Characteristics

Physical properties			
Size	**Angle of repose**	**Bulk density (kg/m^3)**	**Stowage factor (m^3/t)**
Diameter: 2.54 mm	Not applicable	5,000	(0.20 for briquettes)
Hazard classification			
Class	**Subsidiary hazard(s)**	**MHB**	**Group**
Not applicable	Not applicable	WF and/or WT	B

Hazard
May evolve flammable and toxic gases (e.g. phosphine) in contact with water.
This cargo is non-combustible or has a low fire risk.

Stowage and segregation
Segregation as for class 4.3 materials. "Separated from" foodstuffs and class 8 liquids.

Hold cleanliness
Clean and dry as relevant to the hazards of the cargo.

Weather precautions
This cargo shall be kept as dry as practicable. This cargo shall not be handled during precipitation. During handling of this cargo, all non-working hatches of the cargo spaces into which this cargo is loaded, or to be loaded, shall be closed.

Loading
Trim in accordance with the relevant provisions required under sections 4 and 5 of this Code.

As the density of the cargo is extremely high, the tank top may be overstressed unless the cargo is evenly spread across the tank top to equalize the weight distribution. Due consideration shall be given to ensure that the tank top is not overstressed during the voyage and during loading by a pile of the cargo.

Precautions
This cargo shall be kept as dry as reasonably practicable.

Ventilation
Mechanical ventilation shall be conducted during the voyage for the cargo spaces carrying this cargo. Ventilation fans shall be of certified safe type for use in a flammable atmosphere. They shall normally be run continuously whenever this cargo is on board. Where this is impracticable, they shall be operated as weather permits and in any case for a reasonable period prior to discharge.

Carriage
For quantitative measurement of flammable and toxic gases such as Phosphine, which may be evolved from this cargo in accordance with the cargo information, suitable detectors for each gas or combination of gases shall be on board while this cargo is carried. The detectors shall be of certified safe type for use in explosive atmosphere. The concentrations of these gases in the cargo spaces carrying this cargo shall be measured regularly, during the voyage, and the results of the measurements shall be recorded and kept on board.

Discharge
No special requirements.

Clean-up
After discharge of this cargo, the cargo spaces shall be swept clean.
Water shall not be used for cleaning of the cargo space which has contained this cargo, because of danger of gas.

Emergency procedures

Special emergency equipment to be carried Self-contained breathing apparatus.
Emergency procedures Wear self-contained breathing apparatus. **Emergency action in the event of fire** Batten down and use CO_2, if available. **Do not use water**. **Medical first aid** Refer to the *Medical First Aid Guide* (MFAG), as amended.

FERROSILICON UN 1408
with 30% or more but less than 90% silicon
(including briquettes) *(see appendix to this schedule)*

Description
Ferrosilicon is an extremely heavy cargo.

Characteristics

Physical properties			
Size	**Angle of repose**	**Bulk density (kg/m^3)**	**Stowage factor (m^3/t)**
Up to 300 mm briquettes	Not applicable	1,389 to 2,083 (1,111 to 1,538 for briquettes)	0.48 to 0.72 (0.65 to 0.90 for briquettes)
Hazard classification			
Class	**Subsidiary hazard(s)**	**MHB**	**Group**
4.3	6.1		B

Hazard
In contact with moisture or water it may evolve hydrogen, a flammable gas which may form explosive mixtures with air and may, under similar circumstances, produce phosphine and arsine, which are highly toxic gases.
This cargo is non-combustible or has a low fire risk.

Stowage and segregation
"Separated from" foodstuffs and all class 8 liquids.

Hold cleanliness
Clean and dry as relevant to the hazards of the cargo.

Weather precautions
This cargo shall be kept as dry as practicable before loading, during loading and during voyage. This cargo shall not be loaded during precipitation. During loading of this cargo, all non-working hatches of the cargo spaces to which this cargo is loaded, or to be loaded, shall be closed.

Loading
Trim in accordance with the relevant provisions required under sections 4 and 5 of this Code.

When the stowage factor of this cargo is equal to or less than 0.56 m^3/t, the tank top may be overstressed unless the cargo is evenly spread across the tank top to equalize the weight distribution. Due consideration shall be given to ensure that the tank top is not overstressed during the voyage and during loading by a pile of the cargo. *Refer to the appendix to this schedule.*

Precautions
The manufacturer or the shipper shall provide the master with a certificate stating that, after manufacture, the cargo was stored under cover, but exposed to dry weather for not less than three days prior to shipment.

Ventilation
Continuous mechanical ventilation shall be conducted during the voyage for the cargo spaces carrying this cargo. If maintaining ventilation endangers the ship or the cargo, it may be interrupted unless there is a risk of explosion or other danger due to interruption of the ventilation. In any case, mechanical ventilation shall be maintained for a reasonable period prior to discharge. *Refer to the appendix to this schedule.*

Carriage
For quantitative measurements of hydrogen, phosphine and arsine, suitable detectors for each gas or combination of gases shall be on board while this cargo is carried. The detectors shall be of certified safe type for use in explosive atmosphere. The concentrations of these gases in the cargo spaces carrying this cargo shall be measured regularly, during the voyage, and the results of the measurements shall be recorded and kept on board.

Discharge
Refer to the appendix to this schedule.

Clean-up
After discharge of this cargo, the cargo spaces shall be swept clean twice.
Water shall not be used for cleaning of the cargo space which has contained this cargo, because of danger of gas.

Emergency procedures

Special emergency equipment to be carried Self-contained breathing apparatus.
Emergency procedures Wear self-contained breathing apparatus. **Emergency action in the event of fire** Batten down and use CO_2, if available. **Do not use water**. **Medical first aid** Refer to the *Medical First Aid Guide* (MFAG), as amended.

APPENDIX

GENERAL REQUIREMENTS FOR CARRIAGE OF FERROSILICON

1 Chapter II-2 of SOLAS requires fire-fighter's outfits, full chemical protective suits and self-contained breathing apparatus to be readily available on board.

2 Gas concentrations shall be measured, during the voyage, at least once during every eight hours at each outlet ventilator and in any other accessible space adjacent to the cargo space carrying this cargo and the results shall be recorded in the logbook. Facilities shall be provided to make accurate determinations of the gas concentrations at each outlet ventilator without danger to the operator.

3 Ventilation fans shall be in operation at all times from commencement of loading until the cargo space is free of ferrosilicon.

4 The bilge wells shall be in a clean, dry condition before loading. The bilge timbers shall be in good condition and covered with double burlap.

5 The bilge wells shall be opened up and the cargo space cleaned up after discharging. A gas check shall be made before commencement of cleaning up.

DETAILED REQUIREMENTS

Prior to loading, the bulkheads to the engine-room shall be inspected and approved by the Administration as gastight and the safety of the bilge pumping arrangements shall be approved by the Administration. Inadvertent pumping through machinery spaces shall be avoided.

(i) Where the bilge suction valve of the cargo space is located in the machinery space, the valve shall be checked and the valve lid and seat lapped to a fine finish, as necessary. After re-assembly, the valve shall be locked shut and a notice shall be placed adjacent to the valve warning against opening without the master's permission.

(ii) All pipes passing through the cargo space shall be in good order and condition. Hold atmosphere sampling units shall be effectively blanked off.

(iii) Electrical circuits for equipment in cargo spaces which is unsuitable for use in an explosive atmosphere shall be isolated by removal of links in the system other than fuses.

(iv) The cargo spaces shall be ventilated by at least two separate fans which shall be explosion-proof and arranged so that the escaping gas flow is separated from electrical cables and components. The total ventilation shall be at least 6 air changes per hour, based on an empty cargo space.

(v) Ventilator trunkings shall be in sound condition and so arranged to preclude interconnection of the atmosphere in the cargo space with other cargo spaces, accommodation or work areas.

OPERATIONAL REQUIREMENTS

(i) Smoking and naked flame shall be prohibited on deck in the vicinity of the cargo space or in the cargo space itself during loading or discharging.

(ii) Any portable lighting shall be safe for use in an explosive atmosphere.

(iii) The cargo shall be kept dry and, during wet weather conditions, cargo handling shall be suspended and the cargo space shall be closed.

(iv) Sets of self-contained breathing apparatus shall be located and stored for immediate use together with a lifeline and a gas detector.

(v) Prior to commencement of discharging, the atmosphere in the cargo space shall be tested for the presence of toxic and flammable gases.

(vi) Checks for contaminant gases shall be carried out at 30-min intervals while persons are in the cargo space.

(vii) Entry into the cargo space shall be prohibited when gas concentrations exceed the Threshold Limit Values for phosphine (0.3 ppm) or for arsine (0.05 ppm) or where the oxygen level is below 18%.*

GASES RELEASED FROM FERROSILICON IMPURITIES WHEN WATER IS ADDED

(i) Arsine

Arsine is a toxic, colourless gas with a garlic-like odour.

Toxicity

Arsine is a nerve and blood poison. There is generally a delay before the onset of symptoms (sometimes a day or so). These are at first indefinite.

Symptoms

1 Feeling of malaise, difficulty in breathing, severe headache, giddiness, fainting fits, nausea, vomiting and gastric disturbances.

2 In severe cases, vomiting may be pronounced, the mucous membranes may have a bluish discolouration and urine is dark and bloodstained. After a day or so there is severe anaemia and jaundice.

Concentration

A concentration of 500 ppm is lethal to humans after exposure of a few minutes, while concentrations of 250 ppm are dangerous to life after 30 min exposure. Concentrations of 6.25 to 15.5 ppm are dangerous after exposure of 30 to 60 min. A concentration of 0.05 ppm is the threshold long limit to which a person may be exposed.

(ii) Phosphine

Phosphine is colourless, flammable and highly toxic and has the odour of rotting fish.

Toxicity

Phosphine acts on the central nervous system and the blood.

Symptoms

The symptoms exhibited by phosphine poisoning are an oppressed feeling in the chest, headache, vertigo, general debility, loss of appetite and great thirst. Concentrations of 2,000 ppm for a few minutes and 400 to 600 ppm are dangerous to life. 0.3 ppm is the maximum concentration tolerable for several hours without symptoms.
No long-term exposures to this gas shall be permitted.

* Refer to *Revised recommendations for entering enclosed spaces aboard ships* (resolution A.1050(27)).

FERROSILICON
with at least 25% but less than 30% silicon, or 90% or more silicon
(see appendix to this schedule)

Description
Ferrosilicon is an extremely heavy cargo.

Characteristics

Physical properties			
Size	**Angle of repose**	**Bulk density (kg/m^3)**	**Stowage factor (m^3/t)**
Up to 300 mm briquettes	Not applicable	1,389 to 2,083 (1,111 to 1,538 for briquettes)	0.48 to 0.72 (0.65 to 0.90 for briquettes)
Hazard classification			
Class	**Subsidiary hazard(s)**	**MHB**	**Group**
Not applicable	Not applicable	WF and/or WT	B

Hazard
In contact with moisture or water it may evolve hydrogen, a flammable gas which may form explosive mixtures with air and may, under similar circumstances, produce phosphine and arsine, which are highly toxic gases.
This cargo is non-combustible or has a low fire risk.

Stowage and segregation
Segregation as required for class 4.3 materials. "Separated from" foodstuffs and all class 8 liquids.

Hold cleanliness
Clean and dry as relevant to the hazards of the cargo.

Weather precautions
This cargo shall be kept as dry as practicable before loading, during loading and during voyage. This cargo shall not be loaded during precipitation. During loading of this cargo, all non-working hatches of the cargo spaces to which this cargo is loaded, or to be loaded, shall be closed.

Loading
Trim in accordance with the relevant provisions required under sections 4 and 5 of this Code. When the stowage factor of this cargo is equal to or less than 0.56 m^3/t, the tank top may be overstressed unless the cargo is evenly spread across the tank top to equalize the weight distribution. Due consideration shall be given to ensure that the tank top is not overstressed during the voyage and during loading by a pile of the cargo. Refer to the appendix to this schedule.

Precautions
The manufacturer or the shipper shall provide the master with a certificate stating that, after manufacture, the cargo was stored under cover, but exposed to open air for not less than three days prior to shipment.

Ventilation
Continuous mechanical ventilation shall be conducted during the voyage for the cargo spaces carrying this cargo. If maintaining ventilation endangers the ship or the cargo, it may be interrupted unless there is a risk of explosion or other danger due to interruption of the ventilation. In any case, mechanical ventilation shall be maintained for a reasonable period prior to discharge. *Refer to the appendix to this schedule.*

Carriage
For quantitative measurements of hydrogen, phosphine and arsine, suitable detectors for each gas or combination of gases shall be on board while this cargo is carried. The detectors shall be of certified safe type for use in explosive atmosphere. The concentrations of these gases in the cargo spaces carrying this cargo shall be measured regularly, during the voyage, and the results of the measurements shall be recorded and kept on board.

Discharge
Refer to the appendix to this schedule.

Clean-up
After discharge of this cargo, the cargo spaces shall be swept clean twice.
Water shall not be used for cleaning of the cargo space which has contained this cargo, because of danger of gas.

Emergency procedures

Special emergency equipment to be carried Self-contained breathing apparatus.
Emergency procedures Wear self-contained breathing apparatus. **Emergency action in the event of fire** Batten down and use CO_2, if available. **Do not use water.** **Medical first aid** Refer to the *Medical First Aid Guide* (MFAG), as amended.

APPENDIX

GENERAL REQUIREMENTS FOR CARRIAGE OF FERROSILICON

1 Two sets of self-contained breathing apparatus shall be carried in the ship in addition to normal fire-fighter's outfit.

2 Gas concentrations shall be measured, during the voyage, at least once during every eight hours at each outlet ventilator and in any other accessible space adjacent to the cargo space carrying this cargo and the results shall be recorded in the logbook. Facilities shall be provided to make accurate determinations of the gas concentrations at each outlet ventilator without danger to the operator.

3 Ventilation fans shall be in operation at all times from commencement of loading until the cargo space is free of ferrosilicon.

4 The bilge wells shall be in a clean, dry condition before loading. The bilge timbers shall be in good condition and covered with double burlap.

5 The bilge wells shall be opened up and the cargo space cleaned up after discharging. A gas check shall be made before commencement of cleaning up.

DETAILED REQUIREMENTS

Prior to loading, the bulkheads to the engine-room shall be inspected and approved by the Administration as gastight. Satisfaction with the safety of the bilge pumping arrangements shall be approved by the Administration. Inadvertent pumping through machinery spaces shall be avoided.

(i) Where the bilge suction valve of the cargo space is located in the machinery space, the valve shall be checked and the valve lid and seat lapped to a fine finish, as necessary. After re-assembly, the valve shall be locked shut and a notice shall be placed adjacent to the valve warning against opening without the master's permission.

(ii) All pipes passing through the cargo space shall be in good order and condition. Hold atmosphere sampling units shall be effectively blanked off.

(iii) Electrical circuits for equipment in cargo spaces which is unsuitable for use in an explosive atmosphere shall be isolated by removal of links in the system other than fuses.

(iv) The cargo spaces shall be ventilated by at least two separate fans which shall be explosion-proof and arranged so that the escaping gas flow is separated from electrical cables and components. The total ventilation shall be at least 6 air changes per hour, based on an empty cargo space.

(v) Ventilator trunkings shall be in sound condition and so arranged to preclude interconnection of the atmosphere in the cargo space with other cargo spaces, accommodation or work areas.

OPERATIONAL REQUIREMENTS

(i) Smoking and naked flame shall be prohibited on deck in the vicinity of the cargo space or in the cargo space itself during loading or discharging.

(ii) Any portable lighting shall be safe for use in an explosive atmosphere.

(iii) The cargo shall be kept dry and during wet weather conditions, cargo handling shall be suspended and the cargo space shall be closed.

(iv) Sets of self-contained breathing apparatus shall be located and stored for immediate use together with a lifeline and a gas detector.

(v) Prior to commencement of discharging, the atmosphere in the cargo space shall be tested for the presence of toxic and flammable gases.

(vi) Checks for contaminant gases shall be carried out at 30-min intervals while persons are in the cargo space.

(vii) Entry into the cargo space shall be prohibited when gas concentrations exceed the Threshold Limit Values for phosphine (0.3 ppm) or for arsine (0.05 ppm) or where the oxygen level is below 18%.*

* Refer to *Revised recommendations for entering enclosed spaces aboard ships* (resolution A.1050(27)).

GASES RELEASED FROM FERROSILICON IMPURITIES WHEN WATER IS ADDED

(i) Arsine

Arsine is a toxic, colourless gas with a garlic-like odour.

Toxicity

Arsine is a nerve and blood poison. There is generally a delay before the onset of symptoms (sometimes a day or so). These are at first indefinite.

Symptoms

1 Feeling of malaise, difficulty in breathing, severe headache, giddiness, fainting fits, nausea, vomiting and gastric disturbances.

2 In severe cases, vomiting may be pronounced, the mucous membranes may have a bluish discolouration and urine is dark and bloodstained. After a day or so there is severe anaemia and jaundice.

Concentration

A concentration of 500 ppm is lethal to humans after exposure of a few minutes, while concentrations of 250 ppm are dangerous to life after 30 min exposure. Concentrations of 6.25 to 15.5 ppm are dangerous after exposure of 30 to 60 min. A concentration of 0.05 ppm is the threshold long limit to which a person may be exposed.

(ii) Phosphine

Phosphine is colourless, flammable and highly toxic and has the odour of rotting fish.

Toxicity

Phosphine acts on the central nervous system and the blood.

Symptoms

The symptoms exhibited by phosphine poisoning are an oppressed feeling in the chest, headache, vertigo, general debility, loss of appetite and great thirst. Concentrations of 2,000 ppm for a few minutes and 400 to 600 ppm are dangerous to life. 0.3 ppm is the maximum concentration tolerable for several hours without symptoms.
No long-term exposures to this gas shall be permitted.

FERROUS METAL BORINGS, SHAVINGS, TURNINGS or CUTTINGS UN 2793 in a form liable to self-heating

This schedule shall *not* apply to consignments of materials which are accompanied by a declaration submitted prior to loading by the shipper and stating that they have no self-heating properties when transported in bulk.

Description
Metal drillings usually wet or contaminated with such materials as unsaturated cutting oil, oily rags and other combustible material.

Characteristics

Physical properties			
Size	**Angle of repose**	**Bulk density (kg/m^3)**	**Stowage factor (m^3/t)**
Not applicable	Not applicable	Various	Various
Hazard classification			
Class	**Subsidiary hazard(s)**	**MHB**	**Group**
4.2	Not applicable		B

Hazard
These materials are liable to self-heat and ignite spontaneously, particularly when in a finely divided form, wet or contaminated with such materials as unsaturated cutting oil, oily rags and other combustible matter.

Excessive amounts of cast iron borings or organic materials may encourage heating. Self-heating or inadequate ventilation may cause dangerous depletion of oxygen in cargo spaces.

Stowage and segregation
"Separated from" foodstuffs.

Hold cleanliness
Clean and dry as relevant to the hazards of the cargo.

Weather precautions
This cargo shall be kept as dry as practicable. This cargo shall not be handled during precipitation. During handling of this cargo, all non-working hatches of the cargo spaces into which this cargo is loaded, or to be loaded, shall be closed.

Loading
During loading, the material shall be compacted in the cargo space as frequently as practicable with a bulldozer or other means. The bilge of each cargo space in which the cargo is loaded shall be kept as dry as practicable. After loading, the cargo shall be trimmed to eliminate peaks and compacted. Wooden wet battens and dunnage shall be removed from the cargo space before the cargo is loaded.

Precautions
The temperature of this cargo shall be measured prior to and during loading. The temperature of the cargo in the stockyard shall be measured at points between 200 mm and 350 mm from the surface of the cargo pile. This cargo shall only be accepted for loading when the temperature of the cargo prior to loading does not exceed 55°C. If the temperature of the cargo in any cargo space exceeds 90°C during loading, loading shall be suspended and shall not be recommenced until the temperature of the cargo in all cargo spaces has fallen below 85°C.

The ship shall not depart unless the temperature of the cargo in all cargo spaces is below 65°C and has shown a steady or downward trend in temperature for at least eight hours.

Ventilation
The cargo spaces carrying this cargo shall not be ventilated during voyage.

Carriage
The surface temperature of the cargo shall be monitored and recorded daily during the voyage. Temperature readings shall be taken in such a way as not to require entry into the cargo space or, alternatively, if entry is required for this purpose, at least two sets of self-contained breathing apparatus, additional to those required by SOLAS regulation II-2/10.10 shall be provided.

Discharge
Entry into the cargo spaces containing this cargo shall only be permitted for trained personnel wearing self-contained breathing apparatus when the main hatches are open and after adequate ventilation is conducted or for personnel using appropriate breathing apparatus.*

Clean-up
Prior to washing out the residues of this cargo, any oil spillages shall be cleaned from the tank tops and the bilge wells of the cargo spaces for this cargo.

Emergency procedures

Special emergency equipment to be carried Self-contained breathing apparatus
Emergency procedures Nil **Emergency action in the event of fire** Whilst at sea, any rise in surface temperature of the material indicates a self-heating reaction problem. If the temperature should rise to 80˚C, a potential fire situation is developing and the ship should make for the nearest suitable port. Batten down. **Water should not be used at sea**. Early application of an inert gas to a smouldering situation may be effective. **Medical first aid** Refer to the *Medical First Aid Guide* (MFAG), as amended.

Remarks
In port, copious quantities of water may be used, but due consideration should be given to factors affecting the stability of the ship.

* Refer to *Revised recommendations for entering enclosed spaces aboard ships* (resolution A.1050(27)).

FERROUS SULPHATE HEPTAHYDRATE

Description
Pale green crystals. Highly soluble in water. Product commonly referred to as "Copperas".

Characteristics

Physical properties			
Size	**Angle of repose**	**Bulk density (kg/m^3)**	**Stowage factor (m^3/t)**
Crystals	Not applicable	750 to 1,250	0.80 to 1.33
Hazard classification			
Class	**Subsidiary hazard(s)**	**MHB**	**Group**
Not applicable	Not applicable	Not applicable	C

Hazard
Harmful if swallowed. Causes serious eye irritation. Causes skin irritation.
Tends to caking when damp.
This cargo is highly soluble and will be acidic when wet.
Excessive levels spilt into water systems may result in oxygen depletion from the water.
This cargo is non-combustible or has a low fire risk.

Stowage and segregation
"Separated from" oxidizing substances.

Hold cleanliness
Clean and dry as relevant to the hazards of the cargo.

Weather precautions
This cargo shall be kept as dry as practicable. It shall not be handled during precipitation.
During handling of this cargo, all non-working hatches of the cargo spaces into which this cargo is loaded, or to be loaded, shall be closed.

Loading
Trim in accordance with the relevant provisions required under sections 4 and 5 of this Code.

Precautions
Avoid contact with eyes and skin. Persons who may be in contact with the product shall wear protective clothing, gloves and eye protection. Typically, this is a non-dusty product, however, in particularly dry conditions, if dust is generated, a filter mask shall also be worn. Bilge wells shall be clean, dry and covered, as appropriate, to prevent ingress of the cargo.

Ventilation
The cargo spaces carrying this cargo shall not be ventilated during voyage.

Carriage
Hatches of the cargo spaces shall be weathertight to prevent water ingress.

Discharge
If this cargo has hardened, it shall be trimmed to avoid the formation of overhangs, as necessary.

Clean-up
After discharge of this cargo, the cargo spaces and the bilge wells shall be swept clean and then thoroughly washed out.

FERTILIZERS WITHOUT NITRATES
(non-hazardous)

Description
Powder and granular. Greenish, brown or beige in colour. Odourless. Very low moisture content (0% to 1%). Hygroscopic.

Characteristics

Physical properties			
Size	**Angle of repose**	**Bulk density (kg/m^3)**	**Stowage factor (m^3/t)**
1 mm to 3 mm	Not applicable	714 to 1,111	0.90 to 1.40
Hazard classification			
Class	**Subsidiary hazard(s)**	**MHB**	**Group**
Not applicable	Not applicable	Not applicable	C

Hazard
No special hazards.
This cargo is hygroscopic and will cake if wet.
This cargo is non-combustible or has a low fire risk.

Stowage and segregation
No special requirements.

Hold cleanliness
No special requirements.

Weather precautions
This cargo shall be kept as dry as practicable. This cargo shall not be handled during precipitation. During handling of this cargo, all non-working hatches of the cargo spaces into which this cargo is loaded, or to be loaded, shall be closed.

Loading
Trim in accordance with the relevant provisions required under sections 4 and 5 of this Code.

Precautions
No special requirements.

Ventilation
The cargo spaces carrying this cargo shall not be ventilated during voyage.

Carriage
No special requirements.

Discharge
Fertilizers without nitrates are hygroscopic and may cake in overhangs, impairing safety during discharge. If this cargo has hardened, it shall be trimmed to avoid the formation of overhangs, as necessary.

Clean-up
No special requirements.

FISH (IN BULK)

Description
Fish carried in bulk after freezing.

Characteristics

Physical properties			
Size	**Angle of repose**	**Bulk density (kg/m^3)**	**Stowage factor (m^3/t)**
Various	Not applicable	-	-
Hazard classification			
Class	**Subsidiary hazard(s)**	**MHB**	**Group**
Not applicable	Not applicable	Not applicable	A

Hazard
Fish carried in bulk may liquefy.
This cargo is non-combustible or has a low fire risk.

Stowage and segregation
No special requirements.

Hold cleanliness
No special requirements.

Weather precautions
No special requirements

Loading
Trim in accordance with the relevant provisions required under sections 4 and 5 of this Code.

Precautions
Prior to the carriage of this cargo, due consideration shall be given to consult with the competent authority. The requirement in section 7 of this Code, requiring a determination of TML and moisture content declaration may be dispensed with for this cargo.

Bilge wells shall be clean, dry and covered as appropriate, to prevent ingress of the cargo.

Ventilation
No special requirements.

Carriage
The appearance of the surface of this cargo shall be checked regularly during the voyage. If free water above the cargo or fluid state of the cargo is observed during the voyage, the master shall take appropriate actions to prevent cargo shifting and potential capsize of the ship, and give consideration to seeking emergency entry into a place of refuge.

Discharge
No special requirements.

Clean-up
After completion of discharge, attention shall be given to residues of this cargo, which are liable to decompose, resulting in emission of toxic gases and depletion of oxygen.

FISH MEAL (FISH SCRAP), STABILIZED UN 2216
Anti-oxidant treated

*The provisions of this entry shall **not** apply to consignments of fishmeal, which are accompanied by a certificate issued by the competent authority of the country of shipment, stating that the material has no self-heating properties when transported in bulk*.

Description
Brown to greenish-brown material obtained through heating and drying of oily fish. Moisture content: greater than 5% but not exceeding 12%, by mass. Strong odour may affect other cargo.

Fat content: not more than 15%, by mass.

Characteristics

Physical properties			
Size	**Angle of repose**	**Bulk density (kg/m^3)**	**Stowage factor (m^3/t)**
Not applicable	Not applicable	300 to 700	1.43 to 3.33
Hazard classification			
Class	**Subsidiary hazard(s)**	**MHB**	**Group**
9	Not applicable		B

Hazard
Liable to heat spontaneously unless has low fat content or effectively anti-oxidant treated.
Liable to cause oxygen depletion in cargo space.

Stowage and segregation
Segregation as required for class 4.2 materials.

Hold cleanliness
Clean and dry as relevant to the hazards of the cargo.

Weather precautions
This cargo shall be kept as dry as practicable. This cargo shall not be handled during precipitation. During handling of this cargo, all non-working hatches of the cargo spaces into which this cargo is loaded, or to be loaded, shall be closed.

Loading
Trim in accordance with the relevant provisions required under sections 4 and 5 of this Code.

The cargo shall not be accepted for loading when the temperature of the cargo exceeds 35°C or 5°C above the ambient temperature, whichever is higher. The cargo may be loaded without weathering/curing prior to loading.

Precautions

1 This cargo shall only be accepted for loading when the stabilization of the cargo is achieved to prevent spontaneous combustion by effective application:

.1 of between 400 and 1,000 mg/kg (ppm) ethoxyquin, or

.2 of between 1,000 and 4,000 mg/kg (ppm) butylated hydroxytoluene,

at the time of production, within 12 months prior to shipment, and anti-oxidant remnant concentration shall be not less than 100 mg/kg (ppm) at the time of shipment.

2 The shipper shall provide the master with a certificate issued by a person recognized by the competent authority of the country of shipment specifying:

.1 moisture content;

.2 fat content;

.3 details of anti-oxidant treatment for meals older than six months;

.4 anti-oxidant concentrations at the time of shipment, which must exceed 100 mg/kg (ppm);

.5 total weight of the consignment;

.6 temperature of fishmeal at the time of dispatch from the factory; and

.7 date of production.

A suitable equipment for quantitative measurement of the concentration of oxygen in the cargo space shall be provided on board the ship.

Ventilation
Surface ventilation, either natural or mechanical, shall be conducted during the voyage, as necessary, for the cargo spaces carrying this cargo. If the temperature of the cargo exceeds 55°C and continues to increase, ventilation to the cargo space shall be stopped. If self-heating continues, then carbon dioxide or inert gas shall be introduced to the cargo spaces.

Carriage
This cargo shall be kept as cool and dry as reasonably practicable. The temperature of this cargo shall be measured at eight-hour intervals during the voyage. The results of measurements shall be recorded and kept on board.

Discharge
No special requirements.

Clean-up
No special requirements

Emergency procedures

Special emergency equipment to be carried Self-contained breathing apparatus.
Emergency procedures Wear self-contained breathing apparatus. **Emergency action in the event of fire** Batten down; use ship's fixed fire-fighting installation, if fitted. **Medical first aid** Refer to the *Medical First Aid Guide* (MFAG), as amended.

FLUE DUST, CONTAINING LEAD AND ZINC

Description
A yellow to grey granular material obtained as a by-product from refining and smelting of lead and/or zinc containing materials. This can include dusts from primary production (lead and/or zinc containing ores and concentrates), from secondary production (recycling of lead and/or zinc containing materials) and from further refining of lead and/or zinc containing materials (such as zinc or lead metal).

Characteristics

Physical properties			
Size	**Angle of repose**	**Bulk density (kg/m^3)**	**Stowage factor (m^3/t)**
Fines up to 1.2 mm	56°	2,200 to 4,200	0.24 to 0.45
Hazard classification			
Class	**Subsidiary hazard(s)**	**MHB**	**Group**
	Not applicable	TX and/or CR	A and B

Hazard
This cargo may liquefy if shipped at a moisture content in excess of its transportable moisture limit (TML). See sections 7 and 8 of this Code.
May cause long-term health effects. Corrosive to eyes and irritating to skin.
This cargo is non-combustible or has a low fire risk.

Stowage and segregation
"Separated from" foodstuffs.

Hold cleanliness
Clean and dry as relevant to the hazards of the cargo.

Weather precautions
When a cargo is carried in a ship other than a ship complying with the requirements in 7.3.2 of this Code, the following provisions shall be complied with:

.1 the moisture content of the cargo shall be kept less than its TML during loading operations and voyage;

.2 unless expressly provided otherwise in this individual schedule, the cargo shall not be handled during precipitation;

.3 unless expressly provided otherwise in this individual schedule, during handling of the cargo, all non-working hatches of the cargo spaces into which the cargo is loaded, or to be loaded, shall be closed;

.4 the cargo may be handled during precipitation under the conditions stated in the procedures required in 4.3.3 of this Code; and

.5 the cargo in a cargo space may be discharged during precipitation provided that the total amount of the cargo in the cargo space is to be discharged in the port.

Loading
Trim in accordance with the relevant provisions required under sections 4 and 5 of this Code.

As the density of this cargo is extremely high, the tank top may be overstressed unless the cargo is evenly spread across the tank top to equalize the weight distribution. Due consideration shall be given to ensure that the tank top is not overstressed during the voyage and during loading by a pile of this cargo.

Precautions
Bilge wells shall be clean, dry and covered as appropriate, to prevent ingress of the cargo.

Persons who may be exposed to the dust of the cargo shall wear personal protective equipment including goggles or other equivalent dust eye-protection, respiratory protection and/or skin protection as necessary. Due consideration shall be given to prevent dust entering living quarters and enclosed working area. Eating and drinking shall be prohibited in the cargo work areas.

Ventilation
No special requirements.

Carriage
The appearance of the surface of this cargo shall be checked regularly during the voyage. If free water above the cargo or fluid state of the cargo is observed during the voyage, the master shall take appropriate actions to prevent cargo shifting and potential capsize of the ship, and give consideration to seeking emergency entry into a place of refuge.

Discharge
No special requirements.

Clean-up
No special requirements.

Emergency procedures

Special emergency equipment to be carried Protective clothing (goggles, gloves, boots, coveralls and headgear). Self-contained breathing apparatus.
Emergency procedures Wear protective clothing and self-contained breathing apparatus. **Emergency action in the event of fire** Batten down; use ship's fixed firefighting installation, if fitted. Use water spray to control spread of dust, if necessary. **Medical first aid** Refer to the *Medical First Aid Guide* (MFAG), as amended.

FLUORSPAR

Description
Yellow, green or purple crystals. Coarse dust.

Characteristics

Physical properties			
Size	**Angle of repose**	**Bulk density (kg/m^3)**	**Stowage factor (m^3/t)**
Not applicable	Not applicable	Dry: 1,429 to 1,786 Wet: 1,786 to 2,128	Dry: 0.56 to 0.70 Wet: 0.47 to 0.56
Hazard classification			
Class	**Subsidiary hazard(s)**	**MHB**	**Group**
Not applicable	Not applicable	TX	A and B

Hazard
This cargo may liquefy if shipped at a moisture content in excess of its transportable moisture limit (TML). See sections 7 and 8 of this Code. Harmful and irritating by dust inhalation.
This cargo is non-combustible or has a low fire risk.

Stowage and segregation
"Separated from" foodstuffs and all class 8 materials (goods in packaged form and solid bulk materials).

Hold cleanliness
No special requirements.

Weather precautions
When a cargo is carried in a ship other than a ship complying with the requirements in 7.3.2 of this Code, the following provisions shall be complied with:

.1 the moisture content of the cargo shall be kept less than its TML during loading operations and the voyage;

.2 unless expressly provided otherwise in this individual schedule, the cargo shall not be handled during precipitation;

.3 unless expressly provided otherwise in this individual schedule, during handling of the cargo, all non-working hatches of the cargo spaces into which the cargo is loaded, or to be loaded, shall be closed;

.4 the cargo may be handled during precipitation under the conditions stated in the procedures required in 4.3.3 of this Code; and

.5 the cargo in a cargo space may be discharged during precipitation provided that the total amount of the cargo in the cargo space is to be discharged in the port.

Loading
Trim in accordance with the relevant provisions required under sections 4 and 5 of this Code. When the stowage factor of this cargo is equal to or less than 0.56 m^3/t, the tank top may be overstressed unless the cargo is evenly spread across the tank top to equalize the weight distribution. Due consideration shall be given to ensure that the tank top is not overstressed during the voyage and during loading by a pile of the cargo.

Precautions
Appropriate precautions shall be taken to protect machinery and accommodation spaces from the dust of the cargo. Bilge wells of the cargo spaces shall be protected from ingress of the cargo. Due consideration shall be given to protect equipment from the dust of the cargo. Persons who may be exposed to the dust of the cargo shall wear goggles or other equivalent dust eye-protection and dust filter masks. Those persons shall wear protective clothing, as necessary.

Protect machinery, accommodation and bilge wells from dust.

Ventilation
No special requirements.

Carriage
The appearance of the surface of this cargo shall be checked regularly during the voyage. If free water above the cargo or fluid state of the cargo is observed during the voyage, the master shall take appropriate actions to prevent cargo shifting and potential capsize of the ship, and give consideration to seeking emergency entry into a place of refuge.

Discharge
No special requirements.

Clean-up
No special requirements.

Emergency procedures

Special emergency equipment to be carried Nil
Emergency procedures Nil **Emergency action in the event of fire** Nil **Medical first aid** Refer to the *Medical First Aid Guide* (MFAG), as amended.

FLY ASH, DRY

Description
Fly ash, dry is the light, finely divided dusty fine powder residue from coal- and oil-fired power stations. Do not confuse with calcined pyrites.

Characteristics

Physical properties			
Size	**Angle of repose**	**Bulk density (kg/m^3)**	**Stowage factor (m^3/t)**
Not applicable	Not applicable	794	1.26
Hazard classification			
Class	**Subsidiary hazard(s)**	**MHB**	**Group**
Not applicable	Not applicable	Not applicable	C

Hazard
May shift when aerated.
This cargo is non-combustible or has a low fire risk.

Stowage and segregation
"Separated from" foodstuffs.

Hold cleanliness
Clean and dry as relevant to the hazards of the cargo.

Weather precautions
This cargo shall be kept as dry as practicable. This cargo shall not be handled during precipitation. During handling of this cargo, all non-working hatches of the cargo spaces into which this cargo is loaded, or to be loaded, shall be closed.

Loading
Trim in accordance with the relevant provisions required under sections 4 and 5 of this Code.

The ship carrying this cargo shall not depart until the cargo has settled.

Precautions
Bilge wells shall be clean, dry and covered as appropriate, to prevent ingress of the cargo. Appropriate precautions shall be taken to protect machinery and accommodation spaces from the dust of the cargo. Bilge wells of the cargo spaces shall be protected from ingress of the cargo. Due consideration shall be given to protect equipment from the dust of the cargo. Persons who may be exposed to the dust of the cargo shall wear protective clothing, goggles or other equivalent dust eye-protection and dust filter masks, as necessary.

Ventilation
No special requirements.

Carriage
After the completion of loading of this cargo, the hatches of the cargo spaces shall be sealed.

All vents and access ways to the cargo spaces shall be shut during the voyage. Bilges in the cargo spaces carrying this cargo shall not be pumped unless absolutely necessary.

Discharge
No special requirements.

Clean-up

In the case that the residues of this cargo are to be washed out, the cargo spaces and the other structures and equipment which may have been in contact with this cargo or its dust shall be thoroughly swept prior to washing out. Particular attention shall be given to bilge wells and framework in the cargo spaces. After complying with the foregoing requirements, the cargo spaces shall be washed out and the water for washing out shall be pumped out in an appropriate manner, except in the case that the BCSN of the cargo to be loaded subsequent to discharge is FLY ASH, DRY.

FLY ASH, WET

Description
Greyish powder. This cargo is a mixture of the light, finely divided dusty fine powder residue from coal- and oil-fired power stations and water (not less than 10% of water). Ammonia odour.

Characteristics

Physical properties			
Size	**Angle of repose**	**Bulk density (kg/m^3)**	**Stowage factor (m^3/t)**
Under 1 mm	Not applicable	900 to 1,300	0.77 to 1.11
Hazard classification			
Class	**Subsidiary hazard(s)**	**MHB**	**Group**
Not applicable	Not applicable	Not applicable	A

Hazard
This cargo may liquefy if shipped at a moisture content in excess of its transportable moisture limit (TML). See sections 7 and 8 of this Code.
It is non-combustible or has a low fire risk.

Stowage and segregation
"Separated from" foodstuffs.

Hold cleanliness
No special requirements.

Weather precautions
When a cargo is carried in a ship other than a ship complying with the requirements in 7.3.2 of this Code, the following provisions shall be complied with:

.1 the moisture content of the cargo shall be kept less than its TML during loading operations and the voyage;

.2 unless expressly provided otherwise in this individual schedule, the cargo shall not be handled during precipitation;

.3 unless expressly provided otherwise in this individual schedule, during handling of the cargo, all non-working hatches of the cargo spaces into which the cargo is loaded, or to be loaded, shall be closed;

.4 the cargo may be handled during precipitation under the conditions stated in the procedures required in 4.3.3 of this Code; and

.5 the cargo in a cargo space may be discharged during precipitation provided that the total amount of the cargo in the cargo space is to be discharged in the port.

Loading
Trim in accordance with the relevant provisions required under sections 4 and 5 of this Code.

Precautions
Bilge wells shall be clean, dry and covered as appropriate, to prevent ingress of the cargo.

Ventilation
The cargo spaces carrying this cargo shall not be ventilated during voyage.

Carriage
The appearance of the surface of this cargo shall be checked regularly during the voyage. If free water above the cargo or fluid state of the cargo is observed during the voyage, the master shall take appropriate actions to prevent cargo shifting and potential capsize of the ship, and give consideration to seeking emergency entry into a place of refuge.

Discharge
No special requirements.

Clean-up
After discharge of this cargo, the bilge wells and the scuppers of the cargo spaces shall be checked and any blockage in the bilge wells and the scuppers shall be removed.

FOAM GLASS GRAVEL

Description
Foam glass gravel is a lightweight insulation product used in the construction/building industry. This cargo is odourless and of grey anthracite colour.

Characteristics

Physical properties			
Size	**Angle of repose**	**Bulk density (kg/m^3)**	**Stowage factor (m^3/t)**
Various	Not applicable	130 to 250	4.00 to 7.69
Hazard classification			
Class	**Subsidiary hazard(s)**	**MHB**	**Group**
Not applicable	Not applicable	Not applicable	C

Hazard
Dust may cause skin and eye irritation.
This cargo is non-combustible or has a low fire risk.

Stowage and segregation
No special requirements.

Hold cleanliness
No special requirements.

Weather precautions
No special requirements.

Loading
Trim in accordance with the relevant provisions required under sections 4 and 5 of this Code.

Precautions
Persons who may be exposed to the dust of the cargo shall wear goggles or other equivalent dust eye-protection and dust filter masks as well as protective clothing, as necessary. Bilge wells shall be clean, dry and covered as appropriate, to prevent ingress of the cargo.

Ventilation
No special requirements.

Carriage
No special requirements.

Discharge
Entry into the cargo spaces containing this cargo shall only be permitted for trained personnel wearing protective clothing and goggles or other equivalent dust eye-protection as well as dust filter masks.

Clean-up
No special requirements.

GLASS CULLET

Description
Green, brown or uncoloured glass. May have a slight sweet smell. Used to make new glass, glass wool and foam glass. It may also be flint flat glass cullet which may have a grey or ochre appearance caused by adherent glass dust. May have a slight odour caused by organic impurities (plastics, foil). Used for glass production (bottle industry).

Characteristics

Physical properties			
Size	**Angle of repose**	**Bulk density (kg/m^3)**	**Stowage factor (m^3/t)**
Up to 200 cm	Not applicable	600 to 1,330	0.75 to 1.67
Hazard classification			
Class	**Subsidiary hazard(s)**	**MHB**	**Group**
Not applicable	Not applicable	Not applicable	C

Hazard
Potential inhalation hazard and skin and eye irritation from cullet dust during handling, placement and transportation.
Potential risk for cuts or punctures during handling and placement.
This cargo is non-combustible or has a low fire risk.

Stowage and segregation
No special requirements.

Hold cleanliness
No special requirements.

Weather precautions
No special requirements.

Loading
Trim in accordance with the relevant provisions required under sections 4 and 5 of this Code.

Precautions
To protect against possible cuts or penetration injuries as well as against exposure of glass dust to skin, ears and eyes, personnel working with glass cullet shall wear long sleeves, pants, gloves, work boots, hard hats, ear protection and eye protection. Shirt sleeves and pant legs can be taped for additional protection.

Personnel can also wear disposable nuisance dust masks to protect against dust inhalation.

Ventilation
No special requirements.

Carriage
No special requirements.

Discharge
No special requirements.

Clean-up
Avoid handling which creates dust. Wet suppression is an effective measure of dust control.

GRAIN SCREENING PELLETS

The provisions of this schedule shall apply only to grain screening pellets material containing not more than 6.2% oil content and not more than 17.5% oil and moisture content combined.

Description
Grain screening pellets are animal feed products, pelletized animal feed derived from dockage removed from grains. Screenings means dockage that has been removed from grain that does not qualify for any other grain grades. Depending upon their quality, screenings vary in level of parent and volunteer grain material, broken or shrunken kernels, hulls, weed seeds, chaff, dust and other plant material. The colour ranges from brown to yellow.

Characteristics

Physical properties			
Size	**Angle of repose**	**Bulk density (kg/m^3)**	**Stowage factor (m^3/t)**
Length: 12 to 38 mm Diameter: 4 to 7 mm	Less than 30°	478 to 719	1.39 to 2.09
Hazard classification			
Class	**Subsidiary hazard(s)**	**MHB**	**Group**
Not applicable	Not applicable	Not applicable	C

Hazard
This cargo flows freely like grain.
This cargo is non-combustible or has a low fire risk.

Stowage and segregation
No special requirements.

Hold cleanliness
No special requirements.

Weather precautions
This cargo shall be kept as dry as practicable. This cargo shall not be handled during precipitation. During handling of this cargo, all non-working hatches of the cargo spaces into which the cargo is loaded, or to be loaded, shall be closed.

Loading
Trim in accordance with the relevant provisions required under sections 4 and 5 of this Code.

A certificate from a person recognized by the competent authority of the country of shipment shall be provided by the shipper to the master, prior to loading, confirming that the oil and the moisture contents as described in the schedule have been met.

Precautions
Persons who may be exposed to the dust of the cargo shall wear a dust filter masks, protective eyewear and protective clothing as necessary.

Ventilation
No special requirements.

Carriage
Hatches of the cargo spaces shall be weathertight to prevent water ingress.

Discharge
No special requirements.

Clean-up
No special requirements.

GRANULAR FERROUS SULPHATE

Description
Grey to brown granules. Absorbs moisture and is highly soluble in water.

Characteristics

Physical properties			
Size	**Angle of repose**	**Bulk density (kg/m^3)**	**Stowage factor (m^3/t)**
Up to 15 mm	30° to 45°	1,100 to 1,600	0.63 to 0.91
Hazard classification			
Class	**Subsidiary hazard(s)**	**MHB**	**Group**
Not applicable	Not applicable	Not applicable	C

Hazard
Harmful if swallowed. Causes serious eye irritation. Causes skin irritation.
Tends to caking when damp.
It is highly soluble and will be acidic when wet.
Excessive levels spilt into water systems may result in oxygen depletion from the water.
This cargo is non-combustible or has a low fire risk.

Stowage and segregation
"Separated from" oxidizing substances.

Hold cleanliness
Clean and dry as relevant to the hazards of the cargo.

Weather precautions
This cargo shall be kept as dry as practicable. It shall not be handled during precipitation. During handling of this cargo, all non-working hatches of the cargo spaces into which this cargo is loaded, or to be loaded, shall be closed.

Loading
Trim in accordance with the relevant provisions required under sections 4 and 5 of this Code.

Precautions
Avoid contact with eyes and skin. Persons who may be in contact with the product shall wear protective clothing, gloves and eye-protection. Minimize dust generation when loading. If dust is generated a filter mask shall also be worn.
Bilge wells shall be clean, dry and covered as appropriate, to prevent ingress of the cargo.

Ventilation
The cargo spaces carrying this cargo shall not be ventilated during voyage.

Carriage
Hatches of the cargo spaces shall be weathertight to prevent water ingress.

Discharge
If this cargo has hardened, it shall be trimmed to avoid the formation of overhangs, as necessary.

Clean-up
After discharge of this cargo, the cargo spaces and the bilge wells shall be swept clean and then thoroughly washed out.

GRANULATED NICKEL MATTE (**less than 2% moisture content)**

Description
Crude dark grey nickel product composed of about 55% nickel, 20% copper and 25% other mineral impurities. The material is odourless.

Characteristics

Physical properties			
Size	**Angle of repose**	**Bulk density (kg/m^3)**	**Stowage factor (m^3/t)**
Up to 3 mm	Not applicable	2,800 to 4,000	0.25 to 0.36
Hazard classification			
Class	**Subsidiary hazard(s)**	**MHB**	**Group**
Not applicable	Not applicable	TX and/or CR	B

Hazard
Contact with the skin may give rise to irritation.
This cargo is moderately toxic by inhalation.
This cargo is non-combustible or has a low fire risk.

Stowage and segregation
"Separated from" foodstuffs.

Hold cleanliness
No special requirements.

Weather precautions
No special requirements.

Loading
Trim in accordance with the relevant provisions required under sections 4 and 5 of this Code. As the density of the cargo is extremely high, the tank top may be overstressed unless the cargo is evenly spread across the tank top to equalize the weight distribution. Due consideration shall be given to ensure that the tank top is not overstressed during the voyage and during loading process by a pile of the cargo.

Precautions
Persons who may be exposed to the dust component of the cargo shall wear personal protective equipment including goggles or other equivalent dust eye-protection, respiratory protection and/or skin protection, as necessary. Due consideration shall be given to prevent dust entering living quarters and enclosed working area. Eating and drinking is prohibited in the cargo work areas. Appropriate precautions shall be taken to protect machinery and accommodation spaces from the dust of the cargo.

Ventilation
No special requirements.

Carriage
No special requirements.

Discharge
No special requirements.

Clean-up
No special requirements.

Emergency procedures

Special emergency equipment to be carried Protective clothing (gloves, boots and coveralls). Self-contained breathing apparatus.
Emergency procedures Wear protective clothing and self-contained breathing apparatus. **Emergency action in the event of fire** Nil (non-combustible). **Medical first aid** Refer to the *Medical First Aid Guide* (MFAG), as amended.

GRANULATED SLAG

Description
Residue from steelworks blast furnaces with a dirty grey, lumpy appearance. Iron: 0.5%.

Characteristics

Physical properties			
Size	**Angle of repose**	**Bulk density (kg/m^3)**	**Stowage factor (m^3/t)**
Up to 5 mm	Not applicable	1,111	0.90
Hazard classification			
Class	**Subsidiary hazard(s)**	**MHB**	**Group**
Not applicable	Not applicable	Not applicable	C

Hazard
No special hazards. Slag dust is fine and has abrasive characteristics.
This cargo is non-combustible or has a low fire risk.

Stowage and segregation
No special requirements.

Hold cleanliness
No special requirements.

Weather precautions
No special requirements.

Loading
Trim in accordance with the relevant provisions required under sections 4 and 5 of this Code.

This cargo shall not be accepted for loading when the temperature of the cargo exceeds 50°C.

Precautions
Appropriate precautions shall be taken to protect machinery and accommodation spaces from the dust of the cargo. Bilge wells of the cargo spaces shall be protected from ingress of the cargo. Due consideration shall be given to protect equipment from the dust of the cargo. Persons who may be exposed to the dust of the cargo shall wear protective clothing, goggles or other equivalent dust eye-protection and dust filter masks, as necessary.

Ventilation
No special requirements.

Carriage
No special requirements.

Discharge
No special requirements.

Clean-up
No special requirements.

GRANULATED TYRE RUBBER

Description
Fragmented rubber tyre material cleaned and free from other materials.

Characteristics

Physical properties			
Size	**Angle of repose**	**Bulk density (kg/m^3)**	**Stowage factor (m^3/t)**
Granular, up to 10 mm	Not applicable	555	1.80
Hazard classification			
Class	**Subsidiary hazard(s)**	**MHB**	**Group**
Not applicable	Not applicable	Not applicable	C

Hazard
No special hazards.
This cargo is non-combustible or has a low fire risk.

Stowage and segregation
No special requirements.

Hold cleanliness
No special requirements.

Weather precautions
No special requirements.

Loading
Trim in accordance with the relevant provisions required under sections 4 and 5 of this Code.

Precautions
During handling and carriage, no hot work, burning and smoking shall be permitted in the vicinity of the cargo spaces containing this cargo. Prior to shipment, a certificate shall be given to the master by the shipper stating that this cargo consists of clean rubber material only. When the planned interval between the commencement of loading and the completion of discharge of this cargo exceeds 5 days, the cargo shall not be accepted for loading unless the cargo is to be carried in cargo spaces fitted with a fixed gas fire-extinguishing system. The Administration may, if it considers that the planned voyage does not exceed 5 days from the commencement of loading to the completion of discharge, exempt from the requirements of a fitted fixed gas fire-extinguishing system in the cargo spaces for the carriage of this cargo.

Ventilation
No special requirements.

Carriage
No special requirements.

Discharge
No special requirements.

Clean-up
No special requirements.

GYPSUM

Description
A natural hydrated calcium sulphate. Insoluble in water. It is loaded as a fine powder that aggregates into lumps. Gypsum is not water soluble. Average moisture content is 1% to 2%.

Characteristics

Physical properties			
Size	**Angle of repose**	**Bulk density (kg/m^3)**	**Stowage factor (m^3/t)**
Up to 100 mm	Not applicable	1,282 to 1,493	0.67 to 0.78
Hazard classification			
Class	**Subsidiary hazard(s)**	**MHB**	**Group**
Not applicable	Not applicable	Not applicable	C

Hazard
No special hazards.
This cargo is non-combustible or has a low fire risk.

Stowage and segregation
No special requirements.

Hold cleanliness
No special requirements.

Weather precautions
This cargo shall be kept as dry as practicable. This cargo shall not be loaded during precipitation. During loading of this cargo, all non-working hatches of the cargo spaces into which this cargo is loaded, or to be loaded, shall be closed.

Loading
Trim in accordance with the relevant provisions required under sections 4 and 5 of this Code.

Precautions
No special requirements.

Ventilation
No special requirements.

Carriage
No special requirements.

Discharge
No special requirements.

Clean-up
Prior to washing out the residues of this cargo, the decks and the cargo spaces shall be shovelled and swept clean, because washing out of this cargo is difficult.

GYPSUM GRANULATED

Description
Gypsum granulated made from calcium sulphate hydrate which is produced artificially or industrial by-product. It is produced by granulating and processing such calcium sulphate hydrate until its grain size becomes 10 mm diameter or more. Insoluble in water.

Characteristics

Physical properties			
Size	**Angle of repose**	**Bulk density (kg/m^3)**	**Stowage factor (m^3/t)**
Greater than 10 mm	Not applicable	310 to 1,200	0.83 to 3.23
Hazard classification			
Class	**Subsidiary hazard(s)**	**MHB**	**Group**
Not applicable	Not applicable	Not applicable	C

Hazard
No special hazards.
This cargo is non-combustible or has a low fire risk.

Stowage and segregation
No special requirements.

Hold cleanliness
No special requirements.

Weather precautions
No special requirements.

Loading
Trim in accordance with the relevant provisions required under sections 4 and 5 of this Code.

Precautions
No special requirements.

Ventilation
No special requirements.

Carriage
No special requirements.

Discharge
No special requirements.

Clean-up
No special requirements.

ILMENITE CLAY

Description
Very heavy black clay. Abrasive. May be dusty. Titanium, silicate and iron oxides are obtained from ilmenite clay. Moisture content: 10% to 20%.

Characteristics

Physical properties			
Size	**Angle of repose**	**Bulk density (kg/m^3)**	**Stowage factor (m^3/t)**
Up to 0.15 mm	Not applicable	2,000 to 2,500	0.40 to 0.50
Hazard classification			
Class	**Subsidiary hazard(s)**	**MHB**	**Group**
Not applicable	Not applicable	Not applicable	A

Hazard
This cargo may liquefy if shipped at a moisture content in excess of its transportable moisture limit (TML). See sections 7 and 8 of this Code.
This cargo is non-combustible or has a low fire risk.

Stowage and segregation
No special requirements.

Hold cleanliness
No special requirements.

Weather precautions
When a cargo is carried in a ship other than a ship complying with the requirements in 7.3.2 of this Code, the following provisions shall be complied with:

.1 the moisture content of the cargo shall be kept less than its TML during loading operations and the voyage;

.2 unless expressly provided otherwise in this individual schedule, the cargo shall not be handled during precipitation;

.3 unless expressly provided otherwise in this individual schedule, during handling of the cargo, all non-working hatches of the cargo spaces into which the cargo is loaded, or to be loaded, shall be closed;

.4 the cargo may be handled during precipitation under the conditions stated in the procedures required in 4.3.3 of this Code; and

.5 the cargo in a cargo space may be discharged during precipitation provided that the total amount of the cargo in the cargo space is to be discharged in the port.

Loading
Trim in accordance with the relevant provisions required under sections 4 and 5 of this Code.

As the density of the cargo is extremely high, the tank top may be overstressed unless the cargo is evenly spread across the tank top to equalize the weight distribution. Due consideration shall be given to ensure that the tank top is not overstressed during the voyage and during loading by a pile of the cargo.

Precautions
Bilge wells shall be clean, dry and covered as appropriate, to prevent ingress of the cargo.

Ventilation
No special requirements.

Carriage
The appearance of the surface of this cargo shall be checked regularly during the voyage. If free water above the cargo or fluid state of the cargo is observed during the voyage, the master shall take appropriate actions to prevent cargo shifting and potential capsize of the ship, and give consideration to seeking emergency entry into a place of refuge.

Discharge
No special requirements.

Clean-up
No special requirements.

ILMENITE (ROCK)

Description
Ilmenite (rock) is obtained from mine blasting followed by crushing. It has a black colour. It may be smelted in electric arc furnaces or can be used in blast furnaces.

Characteristics

Physical properties			
Size	**Angle of repose**	**Bulk density (kg/m^3)**	**Stowage factor (m^3/t)**
Up to 100 mm	Not applicable	2,400 to 3,200	0.31 to 0.42
Hazard classification			
Class	**Subsidiary hazard(s)**	**MHB**	**Group**
Not applicable	Not applicable	Not applicable	C

Hazard
This cargo has no special hazards.
This cargo is non-combustible or has a low fire risk.

Stowage and segregation
No special requirements.

Hold cleanliness
No special requirements.

Weather precautions
No special requirements.

Loading
Trim in accordance with the relevant provisions required under sections 4 and 5 of this Code. As the density of the cargo is extremely high, the tank top may be overstressed unless the cargo is evenly spread across the tank top to equalize the weight distribution. Due consideration shall be given to ensure that the tank top is not overstressed during the voyage and during loading by a pile of the cargo.

Precautions
Avoid breathing dust. Persons who may be exposed to the dust of the cargo shall wear a dust filter masks, protective eyewear and clothing as necessary.

Ventilation
No special requirements.

Carriage
No special requirements.

Discharge
No special requirements.

Clean-up
No special requirements.

ILMENITE SAND

Description
Very heavy black sand. Abrasive. May be dusty. Titanium, monazite and zinc ore are obtained from ilmenite sand.

Characteristics

Physical properties			
Size	**Angle of repose**	**Bulk density (kg/m^3)**	**Stowage factor (m^3/t)**
Up to 0.15 mm	Not applicable	2,380 to 3,225	0.31 to 0.42
Hazard classification			
Class	**Subsidiary hazard(s)**	**MHB**	**Group**
Not applicable	Not applicable	Not applicable	A

Hazard
This cargo may liquefy if shipped at a moisture content in excess of its transportable moisture limit (TML). See sections 7 and 8 of this Code.
This cargo is non-combustible or has a low fire risk.

Stowage and segregation
No special requirements.

Hold cleanliness
No special requirements.

Weather precautions
When a cargo is carried in a ship other than a ship complying with the requirements in 7.3.2 of this Code, the following provisions shall be complied with:

.1 the moisture content of the cargo shall be kept less than its TML during loading operations and the voyage;

.2 unless expressly provided otherwise in this individual schedule, the cargo shall not be handled during precipitation;

.3 unless expressly provided otherwise in this individual schedule, during handling of the cargo, all non-working hatches of the cargo spaces into which the cargo is loaded, or to be loaded, shall be closed;

.4 the cargo may be handled during precipitation under the conditions stated in the procedures required in 4.3.3 of this Code; and

.5 the cargo in a cargo space may be discharged during precipitation provided that the total amount of the cargo in the cargo space is to be discharged in the port.

Loading
Trim in accordance with the relevant provisions required under sections 4 and 5 of this Code.

As the density of the cargo is extremely high, the tank top may be overstressed unless the cargo is evenly spread across the tank top to equalize the weight distribution. Due consideration shall be given to ensure that the tank top is not overstressed during the voyage and during loading by a pile of the cargo.

Precautions
Bilge wells shall be clean, dry and covered as appropriate, to prevent ingress of the cargo.

Ventilation
No special requirements.

Carriage
The appearance of the surface of this cargo shall be checked regularly during the voyage. If free water above the cargo or fluid state of the cargo is observed during the voyage, the master shall take appropriate actions to prevent cargo shifting and potential capsize of the ship, and give consideration to seeking emergency entry into a place of refuge.

Discharge
No special requirements.

Clean-up
No special requirements.

ILMENITE (UPGRADED)

Description

Ilmenite (upgraded) is obtained from the smelting of rock or sand ilmenite into electric arc furnaces. Ilmenite (upgraded) has a granular form and its colour varies from black (normal grades) to brown-orange for its purified grade.

Ilmenite (upgraded) is also known as titanium slag, titanium ore concentrate, chloride slag, sulphate slag, high grade sulphate slag, slag fines, slag ilmenite electro thermal smelting or TiO_2 slag.

Characteristics

Physical properties			
Size	**Angle of repose**	**Bulk density (kg/m^3)**	**Stowage factor (m^3/t)**
Up to 12 mm	Not applicable	1,860 to 2,400	0.41 to 0.54
Hazard classification			
Class	**Subsidiary hazard(s)**	**MHB**	**Group**
Not applicable	Not applicable	Not applicable	A

Hazard

This material may liquefy if shipped at a moisture content in excess of its transportable moisture limit (TML). See sections 7 and 8 of this Code.
This cargo is non-combustible or has a low fire risk.

Stowage and segregation

No special requirements.

Hold cleanliness

No special requirements.

Weather precautions

This cargo shall be kept as dry as practicable before loading, during loading and while on the voyage. When a cargo is carried in a ship other than a ship complying with the requirements in 7.3.2 of this Code, the following provisions shall be complied with:

.1 the moisture content of the cargo shall be kept less than its TML during loading operations and the voyage;

.2 unless expressly provided otherwise in this individual schedule, the cargo shall not be handled during precipitation;

.3 unless expressly provided otherwise in this individual schedule, during handling of the cargo, all non-working hatches of the cargo spaces into which the cargo is loaded, or to be loaded, shall be closed;

.4 the cargo may be handled during precipitation under the conditions stated in the procedures required in 4.3.3 of this Code; and

.5 the cargo in a cargo space may be discharged during precipitation provided that the total amount of the cargo in the cargo space is to be discharged in the port.

Loading
Trim in accordance with the relevant provisions required under sections 4 and 5 of this Code. As the density of the cargo is extremely high, the tank top may be overstressed unless the cargo is evenly spread across the tank top to equalize the weight distribution. Due consideration shall be given to ensure that the tank top is not overstressed during the voyage and during loading by a pile of the cargo.

Precautions
Bilge wells shall be clean, dry and covered as appropriate to prevent ingress of the cargo. Avoid breathing dust. Persons who may be exposed to the dust component of the cargo shall wear personal protective equipment including goggles or other equivalent dust eye-protection and respiratory protection as necessary. Wash hands and face before eating, drinking or smoking.

Ventilation
No special requirements.

Carriage
The appearance of the cargo shall be checked regularly during the voyage. If free water above the cargo or fluid state of the cargo is observed during the voyage, the master shall take appropriate actions to prevent cargo shifting and potential capsize of the ship, and give consideration to seeking emergency entry into a place of refuge.

Discharge
No special requirements.

Clean-up
No special requirements.

IRON AND STEEL SLAG AND ITS MIXTURE

This cargo may contain substances hazardous to human health such as cadmium, lead, hexavalent chromium, boron and fluorine. This individual schedule shall not apply to cargoes that meet the criteria specified in 9.2.2.5 and 9.2.3.6.

Description
The main component of the cargo is a slag arising from iron and steel manufacture, and a slag mixed with one of the following additives or a combination thereof: cement, granulated blast furnace slag and concrete debris.

The cargo is mostly stabilized before transportation by ageing and slaking for the volume and/or chemical stability in practical usages, and physical properties such as the grain size, etc. are controlled for the performance requirement if necessary. The cargo is transported at room temperature.

This cargo does not include both slag residue and hot iron and steel slag discharged from iron and steelmaking processes.

The iron and steel slag is a vitrified or crystallized solid formed out of high temperature processes, and it is a mixture of several mineralogical phases.

This cargo may include shaped blocks made of iron and steel slag with a combination of cement and ground granulated blast furnace slag. The colour is in the range from greyish-white to dark grey, and the appearance is in the range from granulated, pebble to blocks. Examples of the application of this cargo are: road construction materials, concrete aggregate, soil improvement, civil engineering materials, raw materials of cement industry and raw materials for fertilizer.

Characteristics

Physical properties			
Size	**Angle of repose**	**Bulk density (kg/m^3)**	**Stowage factor (m^3/t)**
Up to 100 mm	Not applicable	1,200 to 3,000	0.33 to 0.83
Hazard classification			
Class	**Subsidiary hazard(s)**	**MHB**	**Group**
Not applicable	Not applicable	Not applicable	A

Hazard
This cargo may liquefy if shipped at a moisture content in excess of its transportable moisture limit (TML). See sections 7 and 8 of this Code.
This cargo is non-combustible and has a low fire risk.

Stowage and segregation
No special requirements.

Hold cleanliness
No special requirements.

Weather precautions
When a cargo is carried in a ship other than a ship complying with the requirements in 7.3.2 of this Code, the following provisions shall be complied with:

.1 the moisture content of the cargo shall be kept less than its TML during loading operations and the voyage;

.2 unless expressly provided otherwise in this individual schedule, the cargo shall not be handled during precipitation;

.3 unless expressly provided otherwise in this individual schedule, during handling of the cargo, all non-working hatches of the cargo spaces into which the cargo is loaded, or to be loaded, shall be closed;

.4 the cargo may be handled during precipitation under the conditions stated in the procedures required in 4.3.3 of this Code; and

.5 the cargo in a cargo space may be discharged during precipitation provided that the total amount of the cargo in the cargo space is to be discharged in the port.

Loading
Trim in accordance with the relevant provisions required under sections 4 and 5 of this Code.

When the stowage factor of this cargo is equal to or less than 0.56 m^3/t, the tank top may be overstressed unless the cargo is evenly spread across the tank top to equalize the weight distribution. Due consideration shall be given to ensure that the tank top is not overstressed during the voyage and during loading by a pile of the cargo.

Precautions
Persons who may be exposed to the dust of the cargo shall wear protective clothing, goggles or other equivalent dust eye-protection and dust filter masks, as necessary.

Ventilation
No special requirements.

Carriage
The appearance of the surface of this cargo shall be checked regularly during the voyage. If free water above the cargo or fluid state of the cargo is observed during the voyage, the master shall take appropriate actions to prevent cargo shifting and potential capsize of the ship, and give consideration to seeking emergency entry into a place of refuge.

Discharge
No special requirements.

Clean-up
No special requirements.

IRON ORE

The provisions of this schedule shall apply to iron ore cargoes:

.1 containing either:

.1 less than 10% of fine particles less than 1 mm (D_{10} > 1 mm); or

.2 less than 50% of particles less than 10 mm (D_{50} > 10 mm); or

.3 both; or

.2 iron ore fines where the total goethite content is 35% or more by mass, provided the master receives from the shipper a declaration of the goethite content of the cargo which has been determined according to internationally or nationally accepted standard procedures.

Description
Iron ore varies in colour from dark grey to rusty red. It varies in iron content from haematite (high grade ore) to ironstone of the lower commercial ranges. Mineral concentrates are different cargoes (see IRON CONCENTRATE).

Characteristics

Physical properties			
Size	**Angle of repose**	**Bulk density (kg/m^3)**	**Stowage factor (m^3/t)**
Up to 250 mm	Not applicable	1,250 to 3,500	0.29 to 0.80
Hazard classification			
Class	**Subsidiary hazard(s)**	**MHB**	**Group**
Not applicable	Not applicable	Not applicable	C

Hazard
No special hazards.
Iron ore cargoes may affect magnetic compasses.
This cargo is non-combustible or has a low fire risk.

Stowage and segregation
No special requirements.

Hold cleanliness
No special requirements.

Weather precautions
No special requirements.

Loading
Trim in accordance with the relevant provisions required under sections 4 and 5 of this Code. When the stowage factor of this cargo is equal to or less than 0.56 m^3/t, the tank top may be overstressed unless the cargo is evenly spread across the tank top to equalize the weight distribution. Due consideration shall be given to ensure that the tank top is not overstressed during the voyage and during loading by a pile of the cargo.

Precautions
Loading rates of this cargo are normally very high. Due consideration shall be given to the ballasting operation to develop the loading plan required by SOLAS regulation VI/7.3. Bilge wells shall be clean, dry and protected as appropriate to prevent ingress of the cargo.

Ventilation
No special requirements.

Carriage
No special requirements.

Discharge
No special requirements.

Clean-up
No special requirements.

IRON ORE FINES

The provisions of this schedule shall apply to iron ore cargoes containing both:

.1 10% or more of fine particles less than 1 mm ($D_{10} \leq 1$ mm); and

.2 50% or more of particles less than 10 mm ($D_{50} \leq 10$ mm).

Notwithstanding the above provision, iron ore fines where the total goethite content is 35% or more by mass may be carried in accordance with the individual schedule for "IRON ORE", provided the master receives from the shipper a declaration of the goethite content of the cargo which has been determined according to internationally or nationally accepted standard procedures.

Description
Iron ore fines vary in colour from dark grey, rusty red to yellow and contain hematite, goethite and magnetite with varying iron content.

IRON CONCENTRATE is a different cargo (see individual schedule for "Mineral concentrates").

Characteristics

Physical properties			
Size	**Angle of repose**	**Bulk density (kg/m^3)**	**Stowage factor (m^3/t)**
10% or more of fine particles less than 1 mm and 50% or more of particles less than 10 mm	Not applicable	1,500 to 3,000	0.29 to 0.67
Hazard classification			
Class	**Subsidiary hazard(s)**	**MHB**	**Group**
Not applicable	Not applicable	Not applicable	A

Hazard
This cargo may liquefy if shipped at a moisture content in excess of its transportable moisture limit (TML). See sections 7 and 8 of this Code.
This cargo may affect magnetic compasses.
This cargo is non-combustible or has a low fire risk.

Stowage and segregation
No special requirements.

Hold cleanliness
No special requirements.

Weather precautions
When a cargo is carried in a ship other than a ship complying with the requirements in 7.3.2 of this Code, the following provisions shall be complied with:

.1 the moisture content of the cargo shall be kept less than its TML during loading operations and the voyage;

.2 unless expressly provided otherwise in this individual schedule, the cargo shall not be handled during precipitation;

.3 unless expressly provided otherwise in this individual schedule, during handling of the cargo, all non-working hatches of the cargo spaces into which the cargo is loaded, or to be loaded, shall be closed;

.4 the cargo may be handled during precipitation under the conditions stated in the procedures required in 4.3.3 of this Code; and

.5 the cargo in a cargo space may be discharged during precipitation provided that the total amount of the cargo in the cargo space is to be discharged in the port.

Loading
Trim in accordance with the relevant provisions required under sections 4 and 5 of this Code.

When the stowage factor of this cargo is equal to or less than 0.56 m^3/t, the tank top may be overstressed unless the cargo is evenly spread across the tank top to equalize the weight distribution. Due consideration shall be given to ensure that the tank top is not overstressed during the voyage and during loading by a pile of the cargo.

Precautions
Loading rates of this cargo are normally very high. Due consideration shall be given to the ballasting operation in developing the loading plan required by SOLAS regulation VI/7.3. Bilge wells shall be clean, dry and protected as appropriate to prevent ingress of the cargo.

Ventilation
No special requirements.

Carriage
Cargo hold bilges shall be sounded at regular intervals and pumped out, as necessary. The appearance of the surface of this cargo shall be checked regularly during the voyage. If free water above the cargo or fluid state of the cargo is observed during the voyage, the master shall take appropriate actions to prevent cargo shifting and potential capsize of the ship, and give consideration to seeking emergency entry into a place of refuge.

Discharge
No special requirements.

Clean-up
No special requirements.

IRON ORE PELLETS

Description
Pellets are approximately spherical lumps formed by crushing iron ore into a powder. This iron oxide is formed into pellets by using clay as a binder and then hardening by firing in kilns at 1,315°C. Moisture content: 0% to 2%.

Characteristics

Physical properties			
Size	**Angle of repose**	**Bulk density (kg/m^3)**	**Stowage factor (m^3/t)**
Up to 20 mm	Not applicable	1,900 to 2,400	0.45 to 0.52
Hazard classification			
Class	**Subsidiary hazard(s)**	**MHB**	**Group**
Not applicable	Not applicable	Not applicable	C

Hazard
No special hazards.
This cargo is non-combustible or has a low fire risk.

Stowage and segregation
No special requirements.

Hold cleanliness
No special requirements.

Weather precautions
No special requirements.

Loading
Trim in accordance with the relevant provisions required under sections 4 and 5 of this Code.

As the density of the cargo is extremely high, the tank top may be overstressed unless the cargo is evenly spread across the tank top to equalize the weight distribution. Due consideration shall be given to ensure that the tank top is not overstressed during the voyage and during loading by a pile of the cargo.

Precautions
Bilge wells shall be clean, dry and covered as appropriate, to prevent ingress of the cargo.

Ventilation
No special requirements.

Carriage
No special requirements.

Discharge
No special requirements.

Clean-up
No special requirements.

IRON OXIDE, SPENT or
IRON SPONGE, SPENT UN 1376
obtained from coal gas purification

Description
Powdery material, black, brown, red or yellow. Strong odour may taint other cargo.

Characteristics

Physical properties			
Size	**Angle of repose**	**Bulk density (kg/m^3)**	**Stowage factor (m^3/t)**
Up to 20 mm	Not applicable	2,222	0.45
Hazard classification			
Class	**Subsidiary hazard(s)**	**MHB**	**Group**
4.2	Not applicable		B

Hazard
Liable to heat and ignite spontaneously, especially if contaminated with oil or moisture. Toxic gases: hydrogen sulphide, sulphur dioxide and hydrogen cyanide may be produced. Dust may cause an explosion hazard. Liable to reduce the oxygen in the cargo space.

Stowage and segregation
"Separated from" foodstuffs.

Hold cleanliness
Clean and dry as relevant to the hazards of the cargo.

Weather precautions
This cargo shall be kept as dry as practicable. This cargo shall not be handled during precipitation. During handling of this cargo, all non-working hatches of the cargo spaces into which this cargo is loaded, or to be loaded, shall be closed.

Loading
Trim in accordance with the relevant provisions required under sections 4 and 5 of this Code.

As the density of the cargo is extremely high, the tank top may be overstressed unless the cargo is evenly spread across the tank top to equalize the weight distribution. Due consideration shall be given to ensure that the tank top is not overstressed during the voyage and during loading by a pile of the cargo.

Precautions
Prior to loading, the shipper or the manufacturer shall provide the master with a certificate stating that the cargo has been cooled and then weathered for not less than 8 weeks prior to shipment.

Ventilation
Surface ventilation only, either natural or mechanical, shall be conducted, as necessary, during the voyage for this cargo.

Carriage
For quantitative measurements of oxygen and hydrogen cyanide, suitable detectors for each gas or combination of gases shall be on board while this cargo is carried. The detectors shall be suitable for use in an atmosphere without oxygen and of certified safe type for use in explosive atmosphere. The concentrations of these gases in the cargo spaces carrying this cargo shall be measured regularly, during the voyage, and the results of the measurements shall be recorded and kept on board.

Discharge
No special requirements.

Clean-up
No special requirements.

Emergency procedures

Special emergency equipment to be carried Protective clothing (gloves, boots, coveralls and headgear). Self-contained breathing apparatus. Spray nozzles.
Emergency procedures Wear protective clothing and self-contained breathing apparatus. **Emergency action in the event of fire** Batten down; use ship's fixed fire-fighting installation, if available. Exclusion of air may be sufficient to control fire. **Medical first aid** Refer to the *Medical First Aid Guide* (MFAG), as amended.

IRON OXIDE TECHNICAL

Description
Iron oxide technical is generated as a product or by-product in the manufacture of di-iron trioxide (iron (III) oxide) for industrial and commercial use. The material is odourless and red in colour.

Characteristics

Physical properties			
Size	**Angle of repose**	**Bulk density (kg/m^3)**	**Stowage factor (m^3/t)**
Fine particles	Not applicable	1,000	1.00
Hazard classification			
Class	**Subsidiary hazard(s)**	**MHB**	**Group**
Not applicable	Not applicable	Not applicable	A

Hazard
Dust may cause skin and eye irritation. Iron cargoes may affect magnetic compasses.
This cargo may liquefy if shipped at a moisture content in excess of its transportable moisture limit (TML). See sections 7 and 8 of this Code.
This cargo is non-combustible or has a low fire risk.

Stowage and segregation
No special requirements.

Hold cleanliness
No special requirements.

Weather precautions
When a cargo is carried in a ship other than a ship complying with the requirements in 7.3.2 of this Code, the following provisions shall be complied with:

.1 the moisture content of the cargo shall be kept less than its TML during loading operations and the voyage;

.2 unless expressly provided otherwise in this individual schedule, the cargo shall not be handled during precipitation;

.3 unless expressly provided otherwise in this individual schedule, during handling of the cargo, all non-working hatches of the cargo spaces into which the cargo is loaded, or to be loaded, shall be closed;

.4 the cargo may be handled during precipitation under the conditions stated in the procedures required in 4.3.3 of this Code; and

.5 the cargo in a cargo space may be discharged during precipitation provided that the total amount of the cargo in the cargo space is to be discharged in the port.

Loading
Trim in accordance with the relevant provisions required under sections 4 and 5 of this Code.

Precautions
Persons who may be exposed to the dust of the cargo shall wear protective clothing, goggles or other equivalent dust eye-protection and dust filter masks, as necessary.
Bilge wells shall be clean, dry and covered as appropriate, to prevent ingress of the cargo.

Ventilation
No special requirements.

Carriage
The appearance of the surface of this cargo shall be checked regularly during the voyage. If free water above the cargo or fluid state of the cargo is observed during the voyage, the master shall take appropriate actions to prevent cargo shifting and potential capsize of the ship, and give consideration to seeking emergency entry into a place of refuge.

Discharge
No special requirements.

Clean-up
After discharge of this cargo, the bilge wells and the scuppers of the cargo spaces shall be checked and any blockage in the bilge wells and the scuppers shall be removed.

IRON SINTER

Description
The thermally agglomerated substance formed by heating a variable mixture of finely divided coke, iron ore, blast furnace dust, steelmaking dust, mill scale, other miscellaneous iron-bearing materials, limestone and dolomite at 1,315°C to 1,482°C.

Characteristics

Physical properties			
Size	**Angle of repose**	**Bulk density (kg/m^3)**	**Stowage factor (m^3/t)**
Up to 200 mm	Not applicable	1,800 to 2,100	0.47 to 0.56
Hazard classification			
Class	**Subsidiary hazard(s)**	**MHB**	**Group**
Not applicable	Not applicable	Not applicable	C

Hazard
Dust of this cargo is fine and may be irritating to eye and respiratory tract.
This cargo is non-combustible or has a low fire risk.

Stowage and segregation
No special requirements.

Hold cleanliness
No special requirements.

Weather precautions
No special requirements.

Loading
Trim in accordance with the relevant provisions required under sections 4 and 5 of this Code.

As the density of the cargo is extremely high, the tank top may be overstressed unless the cargo is evenly spread across the tank top to equalize the weight distribution. Due consideration shall be given to ensure that the tank top is not overstressed during the voyage and during loading by a pile of the cargo.

Precautions
Bilge wells of the cargo space shall be protected from ingress of the cargo. Persons who may be exposed to the dust of the cargo shall wear protective clothing, goggles or other equivalent dust eye-protection and dust filter masks, as necessary.

Ventilation
No special requirements.

Carriage
Bilge shall be sounded and pumped out as necessary during the voyage.

Discharge
No special requirements.

Clean-up
No special requirements.

IRON SMELTING BY-PRODUCTS

Description
This cargo is a by-product from the smelting of iron ore, ilmenite and titanomagnetite. Grey or black, small to large size lumps (up to 45 tonnes), granulated iron included. Depending on the dominant size, Iron by-products from smelting of iron ore, ilmenite and titanomagnetite is called variously:

Iron pan edges K1-K3 bears
Separation of iron Steel bears
Granulated iron Pig iron by-product
Plate iron Beach iron
Pool iron Iron skulls
Flat iron

Characteristics

Physical properties			
Size	**Angle of repose**	**Bulk density (kg/m^3)**	**Stowage factor (m^3/t)**
Various	Not applicable	Various	Various
Hazard classification			
Class	**Subsidiary hazard(s)**	**MHB**	**Group**
Not applicable	Not applicable	Not applicable	C

Hazard
No special hazards.
This cargo is non-combustible or has a low fire risk.

Stowage and segregation
No special requirements.

Hold cleanliness
No special requirements.

Weather precautions
No special requirements.

Loading
Trim in accordance with the relevant provisions required under sections 4 and 5 of this Code.

The tank top may be overstressed unless the cargo is evenly spread across the tank top to equalize the weight distribution. Due consideration shall be given to ensure that the tank top is not overstressed during the voyage and during loading by a pile of the cargo. Large pieces shall not be dropped in the cargo hold and placement of very large lumps shall be such that the tank top is not overstressed by point loads. The weight distribution in the hold shall be considered during loading.

Precautions
Bilge wells of the cargo spaces shall be protected from ingress of the cargo.

Ventilation
No special requirements.

Carriage
No special requirements.

Discharge
When this cargo is discharged by magnet or spider grab:

.1 the deck and deck machineries shall be protected from falling cargo; and

.2 damages to the ship shall be checked, after the completion of discharge.

Clean-up
No special requirements.

IRONSTONE

Description
Ore. Moisture: 1% to 2%.

Characteristics

Physical properties			
Size	**Angle of repose**	**Bulk density (kg/m^3)**	**Stowage factor (m^3/t)**
75 mm	Not applicable	2,564	0.39
Hazard classification			
Class	**Subsidiary hazard(s)**	**MHB**	**Group**
Not applicable	Not applicable	Not applicable	C

Hazard
No special hazards.
This cargo is non-combustible or has a low fire risk.

Stowage and segregation
No special requirements.

Hold cleanliness
No special requirements.

Weather precautions
No special requirements.

Loading
Trim in accordance with relevant provisions required under sections 4 and 5 of this Code. If doubt exists, trim reasonably level to the boundaries of the cargo space so as to minimize the risk of shifting and to ensure that adequate stability will be maintained during the voyage.

As the density of the cargo is extremely high, the tank top may be overstressed unless the cargo is evenly spread across the tank top to equalize the weight distribution. Due consideration shall be given to ensure that tank top is not overstressed during the voyage and during loading by a pile of the cargo.

Precautions
Appropriate precautions shall be taken to protect machinery and accommodation spaces from the dust of the cargo. Bilge wells of the cargo spaces shall be protected from ingress of the cargo. Due consideration shall be given to protect equipment from the dust of the cargo. Persons who may be exposed to the dust of the cargo shall wear protective clothing, goggles or other equivalent dust eye-protection and dust filter masks, as necessary.

Ventilation
No special requirements.

Carriage
No special requirements.

Discharge
No special requirements.

Clean-up
No special requirements.

LABRADORITE

Description
A lime-soda rock form of felspar. May give off dust.

Characteristics

Physical properties			
Size	**Angle of repose**	**Bulk density (kg/m^3)**	**Stowage factor (m^3/t)**
Lumps: 50 mm to 300 mm	Not applicable	1,667	0.60
Hazard classification			
Class	**Subsidiary hazard(s)**	**MHB**	**Group**
Not applicable	Not applicable	Not applicable	C

Hazard
No special hazards.
This cargo is non-combustible or has a low fire risk.

Stowage and segregation
No special requirements.

Hold cleanliness
Clean and dry as relevant to the hazards of the cargo.

Weather precautions
This cargo shall be kept as dry as practicable before loading, during loading and during voyage. This cargo shall not be loaded during precipitation. During loading of this cargo, all non-working hatches of the cargo spaces to which this cargo is loaded, or to be loaded, shall be closed.

Loading
Trim in accordance with the relevant provisions required under sections 4 and 5 of this Code.

Precautions
Appropriate precautions shall be taken to protect machinery and accommodation spaces from the dust of the cargo. Bilge wells of the cargo spaces shall be protected from ingress of the cargo. Due consideration shall be given to protect equipment from the dust of the cargo. Persons who may be exposed to the dust of the cargo shall wear protective clothing, goggles or other equivalent dust eye-protection and dust filter masks, as necessary.

Ventilation
No special requirements.

Carriage
No special requirements.

Discharge
No special requirements.

Clean-up
No special requirements.

LEAD NITRATE UN 1469

Description
White crystals. Soluble in water. Derived from the action of nitrate acid on lead.

Characteristics

Physical properties			
Size	**Angle of repose**	**Bulk density (kg/m^3)**	**Stowage factor (m^3/t)**
Not applicable	Not applicable	-	-
Hazard classification			
Class	**Subsidiary hazard(s)**	**MHB**	**Group**
5.1	6.1		B

Hazard
Toxic if swallowed or dust inhaled.
Not combustible by itself, but mixtures with combustible materials are easily ignited and burn fiercely.

Stowage and segregation
"Separated from" foodstuffs.

Hold cleanliness
Clean and dry as relevant to the hazards of the cargo.

Weather precautions
This cargo shall be kept as dry as practicable before loading, during loading and during voyage. This cargo shall not be loaded during precipitation. During loading of this cargo, all non-working hatches of the cargo spaces to which this cargo is loaded, or to be loaded, shall be closed.

Loading
Trim in accordance with the relevant provisions required under sections 4 and 5 of this Code.

Precautions
Bilge wells shall be clean, dry and covered as appropriate, to prevent ingress of the cargo. Appropriate precautions shall be taken to protect machinery and accommodation spaces from the dust of the cargo. Bilge wells of the cargo spaces shall be protected from ingress of the cargo. Due consideration shall be given to protect equipment from the dust of the cargo. Persons who may be exposed to the dust of the cargo shall wear goggles or other equivalent dust eye-protection and dust filter masks. Those persons shall wear protective clothing, as necessary. The master and officers are to note that the ship's fixed gas fire-fighting installation will be ineffective on fires involving this cargo and that applying copious amounts of water may be necessary.

Ventilation
Natural surface ventilation shall be conducted during the voyage, as necessary, for the cargo spaces carrying this cargo.

Carriage
No special requirements.

Discharge
No special requirements.

Clean-up
No special requirements.

Emergency procedures

Special emergency equipment to be carried Protective clothing (gloves, coveralls and headgear). Self-contained breathing apparatus. Spray nozzles.
Emergency procedures Wear protective clothing and self-contained breathing apparatus. **Emergency action in the event of fire** Use copious quantities of water, which is best applied in the form of a spray to avoid disturbing the surface of the material. The material may fuse or melt, in which condition application of water may result in extensive scattering of the molten materials. Exclusion of air or the use of CO_2 will not control the fire. Due consideration should be given to the effect on the stability of the ship due to accumulated water. **Medical first aid** Refer to the *Medical First Aid Guide* (MFAG), as amended.

LEAD ORE

Description
Heavy soft grey solid material.

Characteristics

Physical properties			
Size	**Angle of repose**	**Bulk density (kg/m^3)**	**Stowage factor (m^3/t)**
Powder	Not applicable	1,493 to 4,167	0.24 to 0.67
Hazard classification			
Class	**Subsidiary hazard(s)**	**MHB**	**Group**
Not applicable	Not applicable	Not applicable	C

Hazard
Toxic, with acids evolves highly toxic vapour.
This cargo is non-combustible or has a low fire risk.

Stowage and segregation
"Separated from" all class 8 liquids.

Hold cleanliness
Clean and dry as relevant to the hazards of the cargo.

Weather precautions
This cargo shall be kept as dry as practicable before loading, during loading and during voyage. This cargo shall not be loaded during precipitation. During loading of this cargo, all non-working hatches of the cargo spaces to which this cargo is loaded, or to be loaded, shall be closed.

Loading
Trim in accordance with the relevant provisions required under sections 4 and 5 of this Code.

When the stowage factor of this cargo is equal to or less than 0.56 m^3/t, the tank top may be overstressed unless the cargo is evenly spread across the tank top to equalize the weight distribution. Due consideration shall be given to ensure that the tank top is not overstressed during the voyage and during loading by a pile of the cargo.

Precautions
No special requirements.

Ventilation
No special requirements.

Carriage
No special requirements.

Discharge
No special requirements.

Clean-up
No special requirements.

LIME (UNSLAKED)

Description
White or greyish-white in colour.

Characteristics

Physical properties			
Size	**Angle of repose**	**Bulk density (kg/m^3)**	**Stowage factor (m^3/t)**
Lump	Not applicable	-	-
Hazard classification			
Class	**Subsidiary hazard(s)**	**MHB**	**Group**
Not applicable	Not applicable	SH and/or CR	B

Hazard
Unslaked lime combines with water to form calcium hydroxide (hydrated lime) or magnesium hydroxide. This reaction develops a great deal of heat which may be sufficient to cause ignition of nearby combustible materials.
Corrosive to eyes and mucous membranes.
This cargo is non-combustible or has a low fire risk.

Stowage and segregation
"Separated from" all packaged dangerous goods and solid bulk cargoes in group B.

Hold cleanliness
Clean and dry as relevant to the hazards of the cargo.

Weather precautions
This cargo shall be kept as dry as practicable. This cargo shall not be handled during precipitation. During handling of this cargo, all non-working hatches of the cargo spaces into which this cargo is loaded, or to be loaded, shall be closed.

Loading
Trim in accordance with the relevant provisions required under sections 4 and 5 of this Code.

Precautions
This cargo shall be kept as dry as practicable. Bilge wells shall be clean, dry and covered as appropriate, to prevent ingress of the cargo. Appropriate precautions shall be taken to protect machinery and accommodation spaces from the dust of the cargo. Bilge wells of the cargo spaces shall be protected from ingress of the cargo. Due consideration shall be given to protect equipment from the dust of the cargo. Persons who may be exposed to the dust of the cargo shall wear goggles or other equivalent dust eye-protection and dust filter masks. Those persons shall wear protective clothing, as necessary.

Ventilation
No special requirements.

Carriage
No special requirements.

Discharge
Do not discharge during precipitation.

Clean-up
No special requirements.

Emergency procedures

Special emergency equipment to be carried Nil
Emergency procedures Nil **Emergency action in the event of fire** Nil (non-combustible). **Do not use water**. **Medical first aid** Refer to the *Medical First Aid Guide* (MFAG), as amended.

LIMESTONE

Description
Limestone varies in colour from cream through white to medium dark grey (when freshly broken).
Moisture: up to 4%.

Characteristics

Physical properties			
Size	**Angle of repose**	**Bulk density (kg/m^3)**	**Stowage factor (m^3/t)**
Fines up to 90 mm	Not applicable	1,190 to 1,493	0.67 to 0.84
Hazard classification			
Class	**Subsidiary hazard(s)**	**MHB**	**Group**
Not applicable	Not applicable	Not applicable	C

Hazard
No special hazards.
This cargo is non-combustible or has a low fire risk.

Stowage and segregation
No special requirements.

Hold cleanliness
No special requirements.

Weather precautions
No special requirements.

Loading
Trim in accordance with the relevant provisions required under sections 4 and 5 of this Code.

Precautions
Bilge wells shall be clean, dry and covered as appropriate, to prevent ingress of the cargo.

Ventilation
No special requirements.

Carriage
No special requirements.

Discharge
No special requirements.

Clean-up
No special requirements.

LINTED COTTON SEED
with not more than 9% moisture and not more than 20.5% oil

Description
Cotton seed with short cotton fibres adhering to the kernel after approximately 90%-98% of the cotton has been removed by machine.

Characteristics

Physical properties			
Size	**Angle of repose**	**Bulk density (kg/m^3)**	**Stowage factor (m^3/t)**
-	Not applicable	490	2.02
Hazard classification			
Class	**Subsidiary hazard(s)**	**MHB**	**Group**
Not applicable	Not applicable	SH	B

Hazard
May self-heat and deplete oxygen in cargo space.

Stowage and segregation
No special requirements.

Hold cleanliness
Clean and dry as relevant to the hazards of the cargo.

Weather precautions
This cargo shall be kept as dry as practicable. This cargo shall not be handled during precipitation. During handling of this cargo, all non-working hatches of the cargo spaces into which this cargo is loaded, or to be loaded, shall be closed.

Loading
Trim in accordance with the relevant provisions required under sections 4 and 5 of this Code.

Precautions
Entry into the cargo space for this cargo shall not be permitted until the cargo space has been ventilated and the atmosphere tested for concentration of oxygen.*

Ventilation
No special requirements.

Carriage
Hatches shall be weathertight to prevent the ingress of water.

Discharge
If this cargo has hardened, it shall be trimmed to avoid the formation of overhanging faces, as necessary.

Clean-up
No special requirements.

* Refer to *Revised recommendations for entering enclosed spaces aboard ships* (resolution A.1050(27)).

Emergency procedures

Special emergency equipment to be carried Self-contained breathing apparatus.
Emergency procedures Wear self-contained breathing apparatus. **Emergency action in the event of fire** Batten down; use ship's fixed fire-fighting installation, if fitted. **Medical first aid** Refer to the *Medical First Aid Guide* (MFAG), as amended.

MAGNESIA (DEADBURNED)

Description
Manufactured in briquette form and is usually white, brown or grey. It is very similar in size, appearance and handling to gravel and is dry and dusty. Deadburned magnesia is natural magnesite calcined at very high temperatures, which results in a non-reactive magnesium oxide, which does not hydrate or produce spontaneous heat.

Characteristics

Physical properties			
Size	**Angle of repose**	**Bulk density (kg/m^3)**	**Stowage factor (m^3/t)**
Fines up to approx. 30 mm	Not applicable	2,000	0.50
Hazard classification			
Class	**Subsidiary hazard(s)**	**MHB**	**Group**
Not applicable	Not applicable	Not applicable	C

Hazard
No special hazards.
This cargo is non-combustible or has a low fire risk.

Stowage and segregation
No special requirements.

Hold cleanliness
No special requirements.

Weather precautions
No special requirements.

Loading
Trim in accordance with the relevant provisions required under sections 4 and 5 of this Code.

As the density of the cargo is extremely high, the tank top may be overstressed unless the cargo is evenly spread across the tank top to equalize the weight distribution. Due consideration shall be given to ensure that the tank top is not overstressed during the voyage and during loading by a pile of the cargo.

Precautions
Prior to loading, the shipper or the manufacturer shall provide the master with a declaration stating that the cargo has been sufficiently heat-treated and is ready for loading.

Ventilation
No special requirements.

Carriage
No special requirements.

Discharge
No special requirements.

Clean-up
No special requirements.

MAGNESIA (UNSLAKED)

Characteristics

Physical properties			
Size	**Angle of repose**	**Bulk density (kg/m^3)**	**Stowage factor (m^3/t)**
Fines up to 90 mm	Not applicable	1,250	0.80
Hazard classification			
Class	**Subsidiary hazard(s)**	**MHB**	**Group**
Not applicable	Not applicable	SH and/or CR	B

Hazard
Combines with water to form magnesium hydroxide with an expansion in volume and a release of heat. May ignite materials with low ignition temperatures. Similar to LIME (UNSLAKED) but is less reactive. Corrosive to eyes and mucous membranes.
This cargo is non-combustible or has a low fire risk.

Stowage and segregation
"Separated from" all packaged dangerous goods and solid bulk cargoes in group B.

Hold cleanliness
Clean and dry as relevant to the hazards of the cargo.

Weather precautions
This cargo shall be kept as dry as practicable. This cargo shall not be handled during precipitation. During handling of this cargo, all non-working hatches of the cargo spaces into which this cargo is loaded, or to be loaded, shall be closed.

Loading
Trim in accordance with the relevant provisions required under sections 4 and 5 of this Code.

Precautions
Appropriate precautions shall be taken to protect machinery and accommodation spaces from the dust of the cargo. Bilge wells of the cargo spaces shall be protected from ingress of the cargo. Due consideration shall be given to protect equipment from the dust of the cargo. Persons who may be exposed to the dust of the cargo shall wear goggles or other equivalent dust eye-protection and dust filter masks. Those persons shall wear protective clothing, as necessary.

Ventilation
No special requirements.

Carriage
No special requirements.

Discharge
Do not discharge during precipitation.

Clean-up
No special requirements.

Emergency procedures

Special emergency equipment to be carried Nil
Emergency procedures Nil **Emergency action in the event of fire** Nil (non-combustible). **Do not use water**. **Medical first aid** Refer to the *Medical First Aid Guide* (MFAG), as amended.

MAGNESITE, natural

Description
Magnesite is white to yellow in colour.

Characteristics

Physical properties			
Size	**Angle of repose**	**Bulk density (kg/m^3)**	**Stowage factor (m^3/t)**
3 mm to 30 mm	Not applicable	1,429	0.70
Hazard classification			
Class	**Subsidiary hazard(s)**	**MHB**	**Group**
Not applicable	Not applicable	Not applicable	C

Hazard
No special hazards.
This cargo is non-combustible or has a low fire risk.

Stowage and segregation
No special requirements.

Hold cleanliness
No special requirements.

Weather precautions
No special requirements.

Loading
Trim in accordance with the relevant provisions required under sections 4 and 5 of this Code.

Precautions
No special requirements.

Ventilation
No special requirements.

Carriage
No special requirements.

Discharge
No special requirements.

Clean-up
No special requirements.

MAGNESIUM NITRATE UN 1474

Description
White crystals, soluble in water. Hygroscopic.

Characteristics

Physical properties			
Size	**Angle of repose**	**Bulk density (kg/m^3)**	**Stowage factor (m^3/t)**
Not applicable	Not applicable	-	-
Hazard classification			
Class	**Subsidiary hazard(s)**	**MHB**	**Group**
5.1	Not applicable		B

Hazard
Although non-combustible by itself, mixtures with combustible material are easily ignited and may burn fiercely.
This cargo is hygroscopic and will cake if wet.

Stowage and segregation
"Separated from" foodstuffs.

Hold cleanliness
Clean and dry as relevant to the hazards of the cargo.

Weather precautions
No special requirements.

Loading
Trim in accordance with the relevant provisions required under sections 4 and 5 of this Code.

Precautions
The master and officers are to note that the ship's fixed gas fire-fighting installation will be ineffective on fires involving this cargo and that applying copious amounts of water may be necessary.

Ventilation
No special requirements.

Carriage
No special requirements.

Discharge
Magnesium nitrate is hygroscopic and may cake in overhangs, impairing safety during discharge. If this cargo has hardened, it shall be trimmed to avoid the formation of overhangs, as necessary.

Clean-up
No special requirements.

Emergency procedures

Special emergency equipment to be carried Protective clothing (gloves, boots, coveralls and headgear). Self-contained breathing apparatus. Spray nozzles.
Emergency procedures Wear protective clothing and self-contained breathing apparatus. **Emergency action in the event of fire** Use copious quantities of water, which is best applied in the form of a spray to avoid disturbing the surface of the material. The material may fuse or melt, in which condition application of water may result in extensive scattering of the molten materials. Exclusion of air or the use of CO_2 will not control the fire. Due consideration should be given to the effect on the stability of the ship due to the accumulated water. **Medical first aid** Refer to the *Medical First Aid Guide* (MFAG), as amended.

Remarks
Material is non-combustible unless contaminated.

MAGNESIUM SULPHATE FERTILIZERS

Description
Powdered fertilizers or fertilizer components containing magnesium sulphate.
Grey to brown powder. Partially soluble in water and may be dusty.

Characteristics

Physical properties			
Size	**Angle of repose**	**Bulk density (kg/m^3)**	**Stowage factor (m^3/t)**
Powder	30° to 35°	850 to 1,150	0.87 to 1.18
Hazard classification			
Class	**Subsidiary hazard(s)**	**MHB**	**Group**
Not applicable	Not applicable	Not applicable	C

Hazard
May be harmful if swallowed. May cause skin or eye irritation.
It is partially soluble.
Dusty but may cake if wetted.
This cargo is non-combustible or has a low fire risk.

Stowage and segregation
No special requirements.

Hold cleanliness
Clean and dry as relevant to the hazards of the cargo.

Weather precautions
This cargo shall be kept as dry as practicable. It shall not be handled during precipitation. During handling of this cargo, all non-working hatches of the cargo spaces into which this cargo is loaded, or to be loaded, shall be closed.

Loading
Trim in accordance with the relevant provisions required under sections 4 and 5 of this Code.

Precautions
Avoid contact with eyes and skin. Minimize dust generation when loading. Persons who may be exposed to the dust of the cargo shall wear goggles or other equivalent dust eye-protection and dust filter masks. Those persons shall wear protective clothing, as necessary. Bilge wells shall be clean, dry and covered as appropriate, to prevent ingress of the cargo.

Ventilation
The cargo spaces carrying this cargo shall not be ventilated during voyage.

Carriage
Hatches of the cargo spaces shall be weathertight to prevent water ingress.

Discharge
If this cargo has hardened, it shall be trimmed to avoid the formation of overhangs, as necessary.

Clean-up
After discharge of this cargo, the cargo spaces and the bilge wells shall be swept clean and then thoroughly washed out.

MANGANESE COMPONENT FERROALLOY SLAG

Description
By-product generated in process of manufacturing manganese component ferroalloy. Particles or lumps of green, brownish-red or greyish-black. Moisture: 1.2% to 5.6%.

Characteristics

Physical properties			
Size	**Angle of repose**	**Bulk density (kg/m^3)**	**Stowage factor (m^3/t)**
Up to 200 mm	Not applicable	1,480 to 1,935	0.52 to 0.68
Hazard classification			
Class	**Subsidiary hazard(s)**	**MHB**	**Group**
Not applicable	Not applicable	Not applicable	C

Hazard
No special hazards.
This cargo is non-combustible or has a low fire risk.

Stowage and segregation
No special requirements.

Hold cleanliness
No special requirements.

Weather precautions
No special requirements.

Loading
Trim in accordance with the relevant provisions required under sections 4 and 5 of this Code. When the stowage factor of this cargo is equal to or less than 0.56 m^3/t, the tank top may be overstressed unless the cargo is evenly spread across the tank top to equalize the weight distribution. Due consideration shall be given to ensure that the tank top is not overstressed during the voyage and during loading by a pile of the cargo.

Precautions
Persons who may be exposed to the dust of the cargo shall wear protective clothing, goggles or other equivalent dust eye-protection and dust filter masks, as necessary.

Ventilation
No special requirements.

Carriage
No special requirements.

Discharge
No special requirements.

Clean-up
No special requirements.

MANGANESE ORE

Description
Manganese ore is black to brownish black in colour. It is a very heavy cargo.
Moisture content: up to 15%.

Characteristics

Physical properties			
Size	**Angle of repose**	**Bulk density (kg/m^3)**	**Stowage factor (m^3/t)**
Fine dust up to 250 mm	Not applicable	1,429 to 3,125	Fines to 0.32 Lumps to 0.70
Hazard classification			
Class	**Subsidiary hazard(s)**	**MHB**	**Group**
Not applicable	Not applicable	Not applicable	C

Hazard
No special hazards.
This cargo is non-combustible or has a low fire risk.

Stowage and segregation
No special requirements.

Hold cleanliness
No special requirements.

Weather precautions
No special requirements.

Loading
Trim in accordance with the relevant provisions required under sections 4 and 5 of this Code.

When the stowage factor of this cargo is equal to or less than 0.56 m^3/t, the tank top may be overstressed unless the cargo is evenly spread across the tank top to equalize the weight distribution. Due consideration shall be given to ensure that the tank top is not overstressed during the voyage and during loading by a pile of the cargo.

Precautions
Appropriate precautions shall be taken to protect machinery and accommodation spaces from the dust of the cargo. Bilge wells of the cargo spaces shall be protected from ingress of the cargo. Due consideration shall be given to protect equipment from the dust of the cargo. Persons who may be exposed to the dust of the cargo shall wear protective clothing, goggles or other equivalent dust eye-protection and dust filter masks, as necessary.

Ventilation
No special requirements.

Carriage
No special requirements.

Discharge
No special requirements.

Clean-up
No special requirements.

MANGANESE ORE FINES

The provisions of this schedule shall apply to manganese ore cargoes containing both:

.1 10% or more of fine particles less than 1 mm ($D_{10} \leq 1$ mm); and

.2 50% or more of particles less than 10 mm ($D_{50} \leq 10$ mm).

Notwithstanding the above provisions, manganese ore cargoes which do not exhibit a flow moisture point (FMP) are not liable to liquefy and shall be shipped as a group C cargo under the provisions of the MANGANESE ORE individual schedule.

This schedule applies to manganese ore cargoes which may liquefy. For manganese ore cargoes not liable to liquefy see the MANGANESE ORE schedule.

Description
Manganese ore fines is multicoloured and usually brown to black. Its colour and texture may vary due to variations of the manganese and gangue minerals present. It is a very heavy cargo with typical moisture content up to 15% by weight.

Characteristics

Physical properties			
Size	**Angle of repose**	**Bulk density (kg/m^3)**	**Stowage factor (m^3/t)**
Typically up to 15 mm with more than 10% finer than 1 mm and more than 50% finer than 10 mm	Not applicable	1,450 to 3,200	0.31 to 0.69
Hazard classification			
Class	**Subsidiary hazard(s)**	**MHB**	**Group**
Not applicable	Not applicable	Not applicable	A

Hazard
This cargo may liquefy if shipped at a moisture content in excess of its transportable moisture limit (TML). See sections 7 and 8 of this Code.
The dust of this cargo is irritating to the eyes and mucous membranes.
It is stable and non-reactive under normal conditions of use, storage and transport. However, this cargo may ignite in contact with incompatible materials such as acids, alkalis, oxidizing and reducing agents. It may decompose to form toxic manganese oxide particles when heated to decomposition.
This cargo is non-combustible or has a low fire risk.

Stowage and segregation
Separated from acids, alkalis, oxidizing and reducing agents.

Hold cleanliness
Clean and dry as relevant to the hazards of the cargo.

Weather precautions
When a cargo is carried in a ship other than a ship complying with the requirements in 7.3.2 of this Code, the following provisions shall be complied with:

.1 the moisture content of the cargo shall be kept less than its TML during loading operations and the voyage;

.2 unless expressly provided otherwise in this individual schedule, the cargo shall not be handled during precipitation;

.3 unless expressly provided otherwise in this individual schedule, during handling of the cargo, all non-working hatches of the cargo spaces into which the cargo is loaded, or to be loaded, shall be closed;

.4 the cargo may be handled during precipitation under the conditions stated in the procedures required in 4.3.3 of this Code; and

.5 the cargo in a cargo space may be discharged during precipitation provided that the total amount of the cargo in the cargo space is to be discharged in the port.

Loading
Trim in accordance with the relevant provisions required under sections 4 and 5 of this Code.

When the stowage factor of this cargo is equal to or less than 0.56 m^3/t, the tank top may be overstressed unless the cargo is evenly spread across the tank top to equalize the weight distribution. Due consideration shall be given to ensure that the tank top is not overstressed during the voyage and during loading by a pile of the cargo.

Precautions
Persons who may be exposed to the dust of the cargo shall wear protective clothing, goggles or other equivalent dust eye-protection and dust filter masks, as necessary.
Bilge wells shall be clean, dry and covered as appropriate, to prevent ingress of the cargo.
The bilge system of a cargo space to which this cargo is to be loaded shall be tested to ensure it is working. Appropriate precautions shall be taken to protect machinery and accommodation spaces from the dust of the cargo.

Ventilation
No special requirements.

Carriage
The appearance of the surface of this cargo shall be checked regularly during the voyage. If free water above the cargo or fluid state of the cargo is observed during the voyage, the master shall take appropriate actions to prevent cargo shifting and potential capsize of the ship, and give consideration to seeking emergency entry into a place of refuge.

Discharge
No special requirements.

Clean-up
No special requirements.

MARBLE CHIPS

Description
Dry, dusty, white to grey lumps, particles and powder mixed with a small amount of gravel and pebbles.

Characteristics

Physical properties			
Size	**Angle of repose**	**Bulk density (kg/m^3)**	**Stowage factor (m^3/t)**
Not applicable	Not applicable	654	1.53
Hazard classification			
Class	**Subsidiary hazard(s)**	**MHB**	**Group**
Not applicable	Not applicable	Not applicable	C

Hazard
No special hazards.
This cargo is non-combustible or has a low fire risk.

Stowage and segregation
No special requirements.

Hold cleanliness
No special requirements.

Weather precautions
No special requirements.

Loading
Trim in accordance with the relevant provisions required under sections 4 and 5 of this Code.

Precautions
Appropriate precautions shall be taken to protect machinery and accommodation spaces from the dust of the cargo. Bilge wells of the cargo spaces shall be protected from ingress of the cargo. Due consideration shall be given to protect equipment from the dust of the cargo. Persons who may be exposed to the dust of the cargo shall wear protective clothing, goggles or other equivalent dust eye-protection and dust filter masks, as necessary.

Ventilation
No special requirements.

Carriage
No special requirements.

Discharge
No special requirements.

Clean-up
No special requirements.

MATTE CONTAINING COPPER AND LEAD

Description
Brown to black material in the form of coarse lumps or chunks formed during the smelting of primary and secondary lead containing materials and composed mainly of sulphides of lead, copper and iron. The material is used in the production of copper and/or lead metal and precious metals.

Characteristics

Physical properties			
Size	**Angle of repose**	**Bulk density (kg/m^3)**	**Stowage factor (m^3/t)**
Up to 500 mm	Not applicable	3,180 to 4,960	0.20 to 0.31
Hazard classification			
Class	**Subsidiary hazard(s)**	**MHB**	**Group**
	Not applicable	TX and/or CR	B

Hazard
May have acute inhalation toxicity. May cause long-term health effects. Corrosive to eyes and irritating to skin.
This cargo is non-combustible or has a low fire risk.

Stowage and segregation
"Separated from" foodstuffs.

Hold cleanliness
Clean and dry as relevant to the hazards of the cargo.

Weather precautions
No special requirements.

Loading
Trim in accordance with the relevant provisions required under sections 4 and 5 of this Code.

As the density of the cargo is extremely high, the tank top may be overstressed unless the cargo is evenly spread across the tank top to equalize the weight distribution. Due consideration shall be given to ensure that the tank top is not overstressed during the voyage and during loading by a pile of this cargo.

Precautions
Persons who may be exposed to the dust of the cargo shall wear personal protective equipment including goggles or other equivalent dust eye-protection, respiratory protection and/or skin protection as necessary. Due consideration shall be given to prevent dust entering living quarters and enclosed working area. Eating and drinking shall be prohibited in the cargo work areas.

Ventilation
No special requirements.

Carriage
No special requirements.

Discharge
No special requirements.

Clean-up
No special requirements.

Emergency procedures

Special emergency equipment to be carried Protective clothing (goggles, gloves, boots, coveralls and headgear). Self-contained breathing apparatus.
Emergency procedures Wear protective clothing and self-contained breathing apparatus. **Emergency action in the event of fire** Batten down; use ship's fixed firefighting installation, if fitted. Use water spray to control spread of dust, if necessary. **Medical first aid** Refer to the *Medical First Aid Guide* (MFAG), as amended.

METAL SULPHIDE CONCENTRATES
(see also Mineral concentrates schedule)

Description
Mineral concentrates are refined ores in which the valuable components have been enriched by eliminating the bulk of waste materials. Generally the particle size is small although agglomerates sometimes exist in concentrates which have not been freshly produced.
The most common concentrates in this category are: zinc concentrates, lead concentrates, copper concentrates and low-grade middling concentrates.

Characteristics

Physical properties			
Size	**Angle of repose**	**Bulk density (kg/m^3)**	**Stowage factor (m^3/t)**
Various	Not applicable	1,790 to 3,230	0.31 to 0.56
Hazard classification			
Class	**Subsidiary hazard(s)**	**MHB**	**Group**
Not applicable	Not applicable	SH and/or TX and/or CR	A and B

Hazard
Some metal sulphide concentrates may have acute and long-term health effects.
This cargo may liquefy if shipped at a moisture content in excess of its transportable moisture limit (TML). See sections 7 and 8 of this Code.
Some sulphide concentrates are liable to oxidation and may have a tendency to self-heat, with associated oxygen depletion and emission of toxic fumes. Some materials may present corrosion problems.

Stowage and segregation
Unless determined by the competent authority, segregation as required for class 4.2 materials. "Separated from" foodstuffs and all class 8 materials.

Hold cleanliness
Clean and dry as relevant to the hazards of the cargo.

Weather precautions
When a cargo is carried in a ship other than a ship complying with the requirements in 7.3.2 of this Code, the following provisions shall be complied with:

.1 the moisture content of the cargo shall be kept less than its TML during loading operations and the voyage;

.2 unless expressly provided otherwise in this individual schedule, the cargo shall not be handled during precipitation;

.3 unless expressly provided otherwise in this individual schedule, during handling of the cargo, all non-working hatches of the cargo spaces into which the cargo is loaded, or to be loaded, shall be closed;

.4 the cargo may be handled during precipitation under the conditions stated in the procedures required in 4.3.3 of this Code; and

.5 the cargo in a cargo space may be discharged during precipitation provided that the total amount of the cargo in the cargo space is to be discharged in the port.

Loading
This cargo shall be trimmed to ensure that the height difference between peaks and troughs does not exceed 5% of the ship's breadth and that the cargo slopes uniformly from the hatch boundaries to the bulkheads to avoid steep surfaces of cargo that could collapse during voyage.

As the density of the cargo is extremely high, the tank top may be overstressed unless the cargo is evenly spread across the tank top to equalize the weight distribution. Due consideration shall be given to ensure that the tank top is not overstressed during the voyage and during loading by a pile of the cargo.

Precautions
Entry into the cargo space for this cargo shall not be permitted until the cargo space has been ventilated and the atmosphere tested for concentration of oxygen.* Appropriate precautions shall be taken to protect machinery and accommodation spaces from the dust of the cargo. Bilge wells of the cargo spaces shall be protected from ingress of the cargo. Due consideration shall be given to protect equipment from the dust of the cargo. Persons who may be exposed to the dust of the cargo shall wear goggles or other equivalent dust eye-protection and dust filter masks. Those persons shall wear protective clothing, as necessary.

When a Metal Sulphide Concentrate is considered as presenting a low fire risk, the carriage of such cargo on a ship not fitted with a fixed gas fire-extinguishing system shall be subject to the Administration's authorization as provided by SOLAS regulation II-2/10.7.1.4.

Ventilation
The cargo spaces carrying this cargo shall not be ventilated during voyage.

Carriage
The appearance of the surface of this cargo shall be checked regularly during the voyage. If free water above the cargo or fluid state of the cargo is observed during the voyage, the master shall take appropriate actions to prevent cargo shifting and potential capsize of the ship, and give consideration to seeking emergency entry into a place of refuge. For quantitative measurements of oxygen and toxic fumes liable to be evolved by the cargo, suitable detectors for each gas and fume or combination of these shall be on board while this cargo is carried. The detectors shall be suitable for use in an atmosphere without oxygen. The concentrations of these gases in the cargo spaces carrying this cargo shall be measured regularly, during the voyage, and the results of the measurements shall be recorded and kept on board.

Discharge
No special requirements.

Clean-up
No special requirements.

* Refer to *Revised recommendations for entering enclosed spaces aboard ships* (resolution A.1050(27)).

Emergency procedures

Special emergency equipment to be carried Self-contained breathing apparatus.
Emergency procedures Wear self-contained breathing apparatus. **Emergency action in the event of fire** Batten down; use ship's fixed fire-fighting installation. Exclusion of air may be sufficient to control the fire. **Do not use water**. **Medical first aid** Refer to the *Medical First Aid Guide* (MFAG), as amended.

Remarks
Fire may be indicated by the smell of sulphur dioxide.

METAL SULPHIDE CONCENTRATES, CORROSIVE UN 1759
(see also Mineral concentrates schedule)

This schedule shall only apply to cargoes that would fall under Packing Group (PG) III as specified in the IMDG Code if they were carried in a packaged form.

Description
Mineral concentrates are refined ores in which the valuable components have been enriched by eliminating the bulk of waste materials. Generally, the particle size is small, although agglomerates sometimes exist in concentrates which have not been freshly produced.

The most common concentrates in this category are: zinc concentrates, lead concentrates, copper concentrates and low grade middling concentrates.

Characteristics

Physical properties			
Size	**Angle of repose**	**Bulk density (kg/m^3)**	**Stowage factor (m^3/t)**
Various	Not applicable	1,700 to 3,230	0.31 to 0.59
Hazard classification			
Class	**Subsidiary hazard(s)**	**MHB**	**Group**
8	Not applicable	SH and/or WT	A and B

Hazard
This cargo may liquefy if shipped at a moisture content in excess of its transportable moisture limit (TML). See sections 7 and 8 of this Code.

Some sulphide concentrates are liable to oxidation and may have a tendency to self-heat, with associated oxygen depletion and emission of toxic fumes. Moisture in the cargo will form sulphurous acid which is corrosive to steel. Some metal sulphide concentrates may have acute and long-term health effects.

Stowage and segregation
Unless determined by the competent authority, segregation as required for class 4.2 and class 8 materials.

"Separated from" foodstuffs.

Hold cleanliness
Clean and dry as relevant to the hazards of the cargo.

Weather precautions
When a cargo is carried in a ship other than a ship complying with the requirements in 7.3.2 of this Code, the following provisions shall be complied with:

.1 the moisture content of the cargo shall be kept less than its TML during loading operations and the voyage;

.2 unless expressly provided otherwise in this individual schedule, the cargo shall not be handled during precipitation;

.3 unless expressly provided otherwise in this individual schedule, during handling of the cargo, all non-working hatches of the cargo spaces into which the cargo is loaded, or to be loaded, shall be closed;

.4 the cargo may be handled during precipitation under the conditions stated in the procedures required in 4.3.3 of this Code; and

.5 the cargo in a cargo space may be discharged during precipitation provided that the total amount of the cargo in the cargo space is to be discharged in the port.

Loading
Trim in accordance with the relevant provisions required under sections 4 and 5 of this Code.

When the stowage factor of this cargo is equal to or less than 0.56 m^3/t, the tank top may be overstressed unless the cargo is evenly spread across the tank top to equalize the weight distribution. Due consideration shall be given to ensure that the tank top is not overstressed during the voyage and during loading by a pile of the cargo forming.

Precautions
Entry into the cargo space for this cargo shall not be permitted until the space has been ventilated and the atmosphere tested for concentration of oxygen.* Appropriate precautions shall be taken to protect machinery and accommodation spaces from the dust of this cargo. Bilge wells shall be clean, dry and covered as appropriate, to prevent ingress of the cargo.

The bilge system of a cargo space to which this cargo is to be loaded shall be tested to ensure it is working. Persons who may be exposed to the dust of the cargo shall wear gloves, goggles or other equivalent dust eye-protection and dust filter masks. Those persons shall wear protective clothing, as necessary.

When a Metal Sulphide Concentrate is considered as presenting a low fire risk, the carriage of such cargo on a ship not fitted with a fixed gas fire-extinguishing system shall be subject to the Administration's authorization as provided by SOLAS regulation II-2/10.7.1.4.

Ventilation
The cargo spaces carrying this cargo shall not be ventilated during voyage.

Carriage
The appearance of the surface of this cargo shall be checked regularly during the voyage. If free water above the cargo or fluid state of the cargo is observed during the voyage, the master shall take appropriate actions to prevent cargo shifting and potential capsize of the ship, and give consideration to seeking emergency entry into a place of refuge.

For quantitative measurements of oxygen and toxic fumes liable to be evolved by the cargo, suitable detectors for each gas and fume or combination of these shall be on board while this cargo is carried. The detectors shall be suitable for use in an atmosphere without oxygen.

The concentrations of these gases in the cargo spaces carrying this cargo shall be measured regularly during the voyage, and the results of the measurements shall be recorded and kept on board.

Discharge
No special requirements.

* Refer to *Revised recommendations for entering enclosed spaces aboard ships* (resolution A.1050(27)).

Clean-up
After discharge of this cargo, the cargo spaces shall be thoroughly washed out and dried. Wet dust or residues will form corrosive sulphurous acid, which is dangerous to personnel and will corrode steel.

Emergency procedures

Special emergency equipment to be carried Protective clothing (gloves, boots, coveralls and headgear). Self-contained breathing apparatus.
Emergency procedures Wear protective clothing and self-contained breathing apparatus. **Emergency action in the event of fire** Batten down; use ship's fixed fire-fighting installation, if fitted. Exclusion of air may be sufficient to control the fire. **Do not use water.** **Medical first aid** Refer to the *Medical First Aid Guide* (MFAG), as amended.

Remarks
Fire may be indicated by the smell of sulphur dioxide.

METAL SULPHIDE CONCENTRATES, SELF-HEATING UN 3190

(see also Mineral concentrates schedule)

This schedule shall only apply to cargoes that would fall under Packing Group (PG) III as specified in the IMDG Code if they were carried in a packaged form. This includes cargoes in PG III that may be exempted in packages of less than 450 L or 3 m^3.

Description

Mineral concentrates are refined ores in which the valuable components have been enriched by eliminating the bulk of waste materials. Generally, the particle size is small, although agglomerates sometimes exist in concentrates which have not been freshly produced.

The most common concentrates in this category are: zinc concentrates, lead concentrates, copper concentrates and low grade middling concentrates.

Characteristics

Physical properties			
Size	**Angle of repose**	**Bulk density (kg/m^3)**	**Stowage factor (m^3/t)**
Various	Not applicable	1,700 to 3,230	0.31 to 0.59
Hazard classification			
Class	**Subsidiary hazard(s)**	**MHB**	**Group**
4.2	Not applicable	WT and/or TX and/or CR	A and B

Hazard

This cargo may liquefy if shipped at a moisture content in excess of its transportable moisture limit (TML). See sections 7 and 8 of this Code.
These sulphide concentrates are liable to oxidation and will self-heat, with associated oxygen depletion and emission of toxic fumes. Some materials may present corrosion problems.
Some metal sulphide concentrates may have acute and long-term health effects.

Stowage and segregation

"Separated from" foodstuffs and class 8 materials.

Hold cleanliness

Clean and dry as relevant to the hazards of the cargo.

Weather precautions

When this cargo is carried in a ship other than a ship complying with the requirements in 7.3.2 of this Code, the following provisions shall be complied with:

.1 the moisture content of the cargo shall be kept less than its TML during loading operations and the voyage;

.2 unless expressly provided otherwise in this individual schedule, the cargo shall not be handled during precipitation;

.3 unless expressly provided otherwise in this individual schedule, during handling of the cargo, all non-working hatches of the cargo spaces into which the cargo is loaded, or to be loaded, shall be closed;

.4 the cargo may be handled during precipitation under the conditions stated in the procedures required in 4.3.3 of this Code; and

.5 the cargo in a cargo space may be discharged during precipitation provided that the total amount of the cargo in the cargo space is to be discharged in the port.

Loading
Trim in accordance with the relevant provisions required under sections 4 and 5 of this Code.

When the stowage factor of this cargo is equal to or less than 0.56 m^3/t, the tank top may be overstressed unless the cargo is evenly spread across the tank top to equalize the weight distribution. Due consideration shall be given to ensure that the tank top is not overstressed during the voyage and during loading by a pile of the cargo forming.

Precautions
The temperature of this cargo shall be measured prior to and during loading. The temperature of the cargo in the stockyard shall be measured at points between 200 mm and 350 mm from the surface of the stockpile. The cargo shall only be accepted for loading when the temperature of the cargo prior to loading does not exceed 55°C.

Means shall be provided for measuring the temperature of the cargo in the range 0°C to 100°C to enable the measurement of temperature of the cargo while being loaded and during voyage without requiring entry into the cargo space.

Entry into the cargo space for this cargo shall not be permitted until the space has been ventilated and the atmosphere tested for concentration of oxygen.* Appropriate precautions shall be taken to protect machinery and accommodation spaces from the dust of this cargo. Bilge wells shall be clean, dry and covered as appropriate, to prevent ingress of the cargo.

The bilge system of a cargo space to which this cargo is to be loaded shall be tested to ensure it is working. Persons who may be exposed to the dust of the cargo shall wear gloves, goggles or other equivalent dust eye-protection and dust filter masks. Those persons shall wear protective clothing, as necessary.

Ventilation
The cargo spaces carrying this cargo shall not be ventilated during the voyage.

Carriage
The appearance of the surface of this cargo shall be checked regularly during the voyage. If free water above the cargo or fluid state of the cargo is observed during the voyage, the master shall take appropriate actions to prevent cargo shifting and potential capsize of the ship, and give consideration to seeking emergency entry into a place of refuge.

For quantitative measurements of oxygen and toxic fumes liable to be evolved by the cargo, suitable detectors for each gas and fume or combination of these shall be on board while this cargo is carried. The detectors shall be suitable for use in an atmosphere without oxygen.

The concentrations of these gases in the cargo spaces carrying this cargo shall be measured regularly during voyage, and the results of the measurements shall be recorded and kept on board.

Discharge
No special requirements.

* Refer to *Revised recommendations for entering enclosed spaces aboard ships* (resolution A.1050(27)).

Clean-up
No special requirements.

Emergency procedures

Special emergency equipment to be carried Protective clothing (gloves, boots, coveralls and headgear). Self-contained breathing apparatus.
Emergency procedures Wear protective clothing and self-contained breathing apparatus. **Emergency action in the event of fire** Batten down; use ship's fixed fire-fighting installation, if fitted. Exclusion of air may be sufficient to control the fire. **Do not use water.** **Medical first aid** Refer to the *Medical First Aid Guide* (MFAG), as amended.

Remarks
Fire may be indicated by the smell of sulphur dioxide.

Mineral concentrates
(see Bulk Cargo Shipping Names below)

CEMENT COPPER
COPPER CONCENTRATE
IRON CONCENTRATE
IRON CONCENTRATE (pellet feed)
IRON CONCENTRATE (sinter feed)
LEAD AND ZINC CALCINES (mixed)
LEAD AND ZINC MIDDLINGS
LEAD CONCENTRATE
LEAD ORE RESIDUE
LEAD SILVER CONCENTRATE
MANGANESE CONCENTRATE
NEFELENE SYENITE (mineral)
NICKEL CONCENTRATE
PENTAHYDRATE CRUDE
PYRITES
PYRITIC ASHES (iron)
PYRITIC CINDERS
SILVER LEAD CONCENTRATE
SLIG (iron ore)
ZINC AND LEAD CALCINES (mixed)
ZINC AND LEAD MIDDLINGS
ZINC CONCENTRATE
ZINC SINTER
ZINC SLUDGE

See also the entries for metal sulphide concentrates.

Description
Mineral concentrates are refined ores in which valuable components have been enriched by eliminating the bulk of waste materials.

Characteristics

Physical properties			
Size	**Angle of repose**	**Bulk density (kg/m^3)**	**Stowage factor (m^3/t)**
Various	Not applicable	1,754 to 3,030	0.33 to 0.57
Hazard classification			
Class	**Subsidiary hazard(s)**	**MHB**	**Group**
Not applicable	Not applicable	Not applicable	A

Hazard
The above materials may liquefy if shipped at a moisture content in excess of their transportable moisture limit (TML). See sections 7 and 8 of this Code.
These cargoes will decompose burlap or canvas cloth covering bilge wells. Continuous carriage of these cargoes may have detrimental structural effects over a long period of time.
These cargoes are non-combustible or have low fire risks.

Stowage and segregation
No special requirements.

Hold cleanliness
No special requirements.

Weather precautions
When a cargo is carried in a ship other than a ship complying with the requirements in 7.3.2 of this Code, the following provisions shall be complied with:

.1 the moisture content of the cargo shall be kept less than its TML during loading operations and the voyage;

.2 unless expressly provided otherwise in this individual schedule, the cargo shall not be handled during precipitation;

.3 unless expressly provided otherwise in this individual schedule, during handling of the cargo, all non-working hatches of the cargo spaces into which the cargo is loaded, or to be loaded, shall be closed;

.4 the cargo may be handled during precipitation under the conditions stated in the procedures required in 4.3.3 of this Code; and

.5 the cargo in a cargo space may be discharged during precipitation provided that the total amount of the cargo in the cargo space is to be discharged in the port.

Loading
This cargo shall be trimmed to ensure that the height difference between peaks and troughs does not exceed 5% of the ship's breadth and that the cargo slopes uniformly from the hatch boundaries to the bulkheads to avoid steep surfaces of cargo that could collapse during voyage.

When the stowage factor of this cargo is equal to or less than 0.56 m^3/t, the tank top may be overstressed unless the cargo is evenly spread across the tank top to equalize the weight distribution. Due consideration shall be given to ensure that the tank top is not overstressed during the voyage and during loading by a pile of the cargo.

Precautions
Bilge wells shall be clean, dry and covered as appropriate, to prevent ingress of the cargo. The bilge system of a cargo space to which this cargo is to be loaded shall be tested to ensure it is working.

Ventilation
The cargo spaces carrying this cargo shall not be ventilated during voyage.

Carriage
The appearance of the surface of this cargo shall be checked regularly during the voyage. If free water above the cargo or fluid state of the cargo is observed during the voyage, the master shall take appropriate actions to prevent cargo shifting and potential capsize of the ship, and give consideration to seeking emergency entry into a place of refuge.

Discharge
No special requirements.

Clean-up
No special requirements.

MONOAMMONIUM PHOSPHATE (M.A.P.)

Description
M.A.P. is odourless and comes in the form of brownish-grey granules. It can be very dusty. Hygroscopic.

Characteristics

Physical properties			
Size	**Angle of repose**	**Bulk density (kg/m^3)**	**Stowage factor (m^3/t)**
Not applicable	35° to 40°	826 to 1,000	1.00 to 1.21
Hazard classification			
Class	**Subsidiary hazard(s)**	**MHB**	**Group**
Not applicable	Not applicable	Not applicable	C

Hazard
Bulk M.A.P. has a pH of 4.5 and in the presence of moisture content can be highly corrosive.
This cargo is hygroscopic and will cake if wet.
This cargo will decompose burlap or canvas cloth covering bilge wells. Continuous carriage of this cargo may have detrimental structural effects over a long period of time.
This cargo is non-combustible or has a low fire risk.

Stowage and segregation
No special requirements.

Hold cleanliness
Clean and dry as relevant to the hazards of the cargo.

Weather precautions
This cargo shall be kept as dry as practicable. This cargo shall not be handled during precipitation. During handling of this cargo all non-working hatches of the cargo spaces into which this cargo is loaded, or to be loaded, shall be closed.

Loading
Trim in accordance with the relevant provisions required under sections 4 and 5 of this Code.

Precautions
Appropriate precautions shall be taken to protect machinery and accommodation spaces from the dust of the cargo. Bilge wells of the cargo spaces shall be protected from ingress of the cargo. Due consideration shall be given to protect equipment from the dust of the cargo. Persons who may be exposed to the dust of the cargo shall wear goggles or other equivalent dust eye-protection and dust filter masks. Those persons shall wear protective clothing, as necessary.

Ventilation
The cargo spaces carrying this cargo shall not be ventilated during voyage.

Carriage
Condensation in the cargo spaces carrying this cargo, sweating of this cargo and entering of water from hatch covers to the cargo spaces shall be checked regularly during the voyage. Due attention shall be given to the sealing of hatches of the cargo spaces.

Discharge
Monoammonium phosphate is hygroscopic and may cake in overhangs, impairing safety during discharge. If this cargo has hardened, it shall be trimmed to avoid the formation of overhangs, as necessary.

Clean-up
After discharge of this cargo, particular attention shall be given to bilge wells of the cargo spaces.

MONOAMMONIUM PHOSPHATE (M.A.P.), MINERAL ENRICHED COATING

Description
This cargo is monoammonium phosphate (M.A.P.) with a mineral enriched coating. Odourless, brownish-grey granules. It is hygroscopic and can be very dusty.

Characteristics

Physical properties			
Size	**Angle of repose**	**Bulk density (kg/m^3)**	**Stowage factor (m^3/t)**
Up to 4 mm	35° to 40°	826 to 1,000	1.00 to 1.21
Hazard classification			
Class	**Subsidiary hazard(s)**	**MHB**	**Group**
Not applicable	Not applicable	CR	B

Hazard
This cargo has a pH of 4.5 and in the presence of moisture can be highly corrosive to eyes and skin.
This cargo will cake if wet.
This cargo will decompose burlap or canvas cloth covering bilge wells. Continuous carriage of this cargo may have detrimental structural effects over a long period of time.
This cargo is non-combustible or has a low fire risk.

Stowage and segregation
No special requirements.

Hold cleanliness
Clean and dry as relevant to the hazards of the cargo.

Weather precautions
This cargo shall be kept as dry as practicable. This cargo shall not be handled during precipitation. During handling of this cargo all non-working hatches of the cargo spaces into which this cargo is loaded, or to be loaded, shall be closed.

Loading
Trim in accordance with the relevant provisions required under sections 4 and 5 of this Code.

Precautions
Appropriate precautions shall be taken to protect machinery and accommodation spaces from the dust of the cargo. Bilge wells of the cargo spaces shall be protected from ingress of the cargo. Due consideration shall be given to protect equipment from the dust of the cargo. Persons who may be exposed to the dust of the cargo shall wear gloves, goggles or other equivalent dust eye-protection and dust filter masks. Those persons shall wear protective clothing, as necessary.

Ventilation
The cargo spaces carrying this cargo shall not be ventilated during voyage.

Carriage
Condensation in the cargo spaces carrying this cargo, sweating of this cargo and entering of water from hatch covers to the cargo spaces shall be checked regularly during the voyage. Due attention shall be given to the sealing of hatches of the cargo spaces.

Discharge
This cargo is hygroscopic and may cake in overhangs, impairing safety during discharge. If this cargo has hardened, it shall be trimmed to avoid the formation of overhangs, as necessary.

Clean-up
After discharge of this cargo, particular attention shall be given to bilge wells of the cargo spaces.

Emergency procedures

Special emergency equipment to be carried Protective clothing (gloves, boots, coveralls and headgear). Self-contained breathing apparatus.
Emergency procedures Wear protective clothing and self-contained breathing apparatus. **Emergency action in the event of fire** Batten down; use ship's fixed fire-fighting installation, if fitted. **Medical first aid** Refer to the *Medical First Aid Guide* (MFAG), as amended.

MONOCALCIUMPHOSPHATE (MCP)

Description
The product consists of monocalciumphosphate, monohydrate. Granulated. Light grey. Odourless.

Characteristics

Physical properties			
Size	**Angle of repose**	**Bulk density (kg/m^3)**	**Stowage factor (m^3/t)**
0.2 mm to 2 mm	Approximately 32°	900 to 1,100	0.91 to 1.11
Hazard classification			
Class	**Subsidiary hazard(s)**	**MHB**	**Group**
Not applicable	Not applicable	CR	A and B

Hazard
Potential inhalation hazard and eye irritation from monocalciumphosphate dust during handling, placement and transportation.
This cargo is non-combustible or has a low fire risk.

Stowage and segregation
No special requirements.

Hold cleanliness
No special requirements.

Weather precautions
When a cargo is carried in a ship other than a ship complying with the requirements in 7.3.2 of this Code, the following provisions shall be complied with:

.1 the moisture content of the cargo shall be kept less than its TML during loading operations and the voyage;

.2 unless expressly provided otherwise in this individual schedule, the cargo shall not be handled during precipitation;

.3 unless expressly provided otherwise in this individual schedule, during handling of the cargo, all non-working hatches of the cargo spaces into which the cargo is loaded, or to be loaded, shall be closed;

.4 the cargo may be handled during precipitation under the conditions stated in the procedures required in 4.3.3 of this Code; and

.5 the cargo in a cargo space may be discharged during precipitation provided that the total amount of the cargo in the cargo space is to be discharged in the port.

Loading
Trim in accordance with the relevant provisions required under sections 4 and 5 of this Code.

Precautions
Appropriate precautions shall be taken to protect machinery and accommodation spaces from the dust of the cargo. Bilge wells of the cargo spaces shall be protected from ingress of the cargo. Due consideration shall be given to protect equipment from the dust of the cargo. Persons who may be exposed to the dust of the cargo shall wear protective clothing, gloves, goggles or other equivalent dust eye-protection and dust filter masks, as necessary.

Ventilation
No special requirements.

Carriage
The appearance of the surface of this cargo shall be checked regularly during the voyage. If free water above the cargo or fluid state of the cargo is observed during the voyage, the master shall take appropriate actions to prevent cargo shifting and potential capsize of the ship, and give consideration to seeking emergency entry into a place of refuge.

Discharge
No special requirements.

Clean-up
Avoid handling which creates dust.

Emergency procedures

Special emergency equipment to be carried Protective clothing (gloves, boots, coveralls and headgear). Self-contained breathing apparatus.
Emergency procedures Wear protective clothing and self-contained breathing apparatus. **Emergency action in the event of fire** Batten down; use ship's fixed fire-fighting installation, if fitted. Exclusion of air may be sufficient to control the fire. **Medical first aid** Refer to the *Medical First Aid Guide* (MFAG), as amended.

NICKEL ORE

Description
Nickel ore varies in colour. There are several types of ore of variable particle size and moisture content. Some may contain clay-like ores. For concentrates, see NICKEL CONCENTRATE.

Characteristics

Physical properties			
Size	**Angle of repose**	**Bulk density (kg/m^3)**	**Stowage factor (m^3/t)**
Various	Not applicable	1,400 to 1,800	0.55 to 0.71
Hazard classification			
Class	**Subsidiary hazard(s)**	**MHB**	**Group**
Not applicable	Not applicable	Not applicable	A

Hazard
This material may liquefy if shipped at a moisture content in excess of its transportable moisture limit (TML). See sections 7 and 8 of this Code.
This cargo is non-combustible or has a low fire risk.

Stowage and segregation
No special requirements.

Hold cleanliness
Cargo spaces must be clean and dry.

Weather precautions
When a cargo is carried in a ship other than a ship complying with the requirements in 7.3.2 of this Code, the following provisions shall be complied with:

.1 the moisture content of the cargo shall be kept less than its TML during loading operations and the voyage;

.2 unless expressly provided otherwise in this individual schedule, the cargo shall not be handled during precipitation;

.3 unless expressly provided otherwise in this individual schedule, during handling of the cargo, all non-working hatches of the cargo spaces into which the cargo is loaded, or to be loaded, shall be closed;

.4 the cargo may be handled during precipitation under the conditions stated in the procedures required in 4.3.3 of this Code; and

.5 the cargo in a cargo space may be discharged during precipitation provided that the total amount of the cargo in the cargo space is to be discharged in the port.

Loading
Trim in accordance with the relevant provisions required under sections 4 and 5 of this Code.
When the stowage factor of this cargo is equal to or less than 0.56 m^3/t, the tank top may be overstressed unless the cargo is evenly spread across the tank top to equalize the weight distribution. Due consideration shall be given to ensure that the tank top is not overstressed during the voyage and during loading by a pile of the cargo.

Precautions
Bilge wells shall be clean, dry and covered as appropriate, to prevent ingress of the cargo. The bilge system of a cargo space to which this cargo is to be loaded shall be tested to ensure that it is working.

Ventilation
The cargo spaces carrying this cargo shall not be ventilated during voyage.

Carriage
The appearance of the surface of this cargo shall be checked regularly during the voyage. If free water above the cargo or fluid state of the cargo is observed during the voyage, the master shall take appropriate actions to prevent cargo shifting and potential capsize of the ship, and give consideration to seeking emergency entry into a place of refuge.

Discharge
No special requirements.

Clean-up
No special requirements.

OLIVINE GRANULAR AND GRAVEL AGGREGATE PRODUCTS

This schedule shall only apply to cargoes containing less than 5% of fine particles less than 0.5 mm.

Description
Olivine granular and gravel aggregate products are naturally occurring minerals and the colour can be pale greenish-grey to brownish.

Characteristics

Physical properties			
Size	**Angle of repose**	**Bulk density (kg/m^3)**	**Stowage factor (m^3/t)**
Up to 100 mm	30° to 45°	1,600 to 1,900	0.53 to 0.63
Hazard classification			
Class	**Subsidiary hazard(s)**	**MHB**	**Group**
Not applicable	Not applicable	Not applicable	C

Hazard
No special hazards.
This cargo is non-combustible or has a low fire risk.

Stowage & segregation
No special requirements.

Hold cleanliness
No special requirements.

Weather precautions
No special requirements.

Loading
Trim in accordance with the relevant provisions required under sections 4 and 5 of this Code.

When the stowage factor of this cargo is equal to or less than 0.56 m^3/t, the tank top may be overstressed unless the cargo is evenly spread across the tank top to equalize the weight distribution. Due consideration shall be given to ensure that the tank top is not overstressed during the voyage and during loading by a pile of the cargo.

Precautions
No special requirements.

Ventilation
No special requirements.

Carriage
No special requirements.

Discharge
No special requirements.

Clean-up
No special requirements.

OLIVINE SAND

Description
Olivine sand is a naturally occurring mineral and the colour can be pale greenish-grey to brownish.

Characteristics

Physical properties			
Size	**Angle of repose**	**Bulk density (kg/m^3)**	**Stowage factor (m^3/t)**
Up to 20 mm	30° to 45°	1,600 to 1,900	0.53 to 0.63
Hazard classification			
Class	**Subsidiary hazard(s)**	**MHB**	**Group**
Not applicable	Not applicable	Not applicable	A

Hazard
This cargo may liquefy if shipped at a moisture content in excess of its transportable moisture limit (TML). See sections 7 and 8 of this Code.
This cargo is non-combustible or has a low fire risk.

Stowage & segregation
No special requirements.

Hold cleanliness
No special requirements.

Weather precautions
When a cargo is carried in a ship other than a ship complying with the requirements in 7.3.2 of this Code, the following provisions shall be complied with:

.1 the moisture content of the cargo shall be kept less than its TML during loading operations and the voyage;

.2 unless expressly provided otherwise in this individual schedule, the cargo shall not be handled during precipitation;

.3 unless expressly provided otherwise in this individual schedule, during handling of the cargo, all non-working hatches of the cargo spaces into which the cargo is loaded, or to be loaded, shall be closed;

.4 the cargo may be handled during precipitation under the conditions stated in the procedures required in 4.3.3 of this Code; and

.5 the cargo in a cargo space may be discharged during precipitation provided that the total amount of the cargo in the cargo space is to be discharged in the port.

Loading
Trim in accordance with the relevant provisions required under sections 4 and 5 of this Code. When the stowage factor of this cargo is equal to or less than 0.56 m^3/t, the tank top may be overstressed unless the cargo is evenly spread across the tank top to equalize the weight distribution. Due consideration shall be given to ensure that the tank top is not overstressed during the voyage and during loading by a pile of the cargo.

Precautions
No special requirements.

Ventilation
No special requirements.

Carriage
The appearance of the surface of this cargo shall be checked regularly during the voyage. If free water above the cargo or fluid state of the cargo is observed during the voyage, the master shall take appropriate actions to prevent cargo shifting and potential capsize of the ship, and give consideration to seeking emergency entry into a place of refuge.

Discharge
No special requirements.

Clean-up
No special requirements.

PEANUTS (in shell)

Description
An edible, tan-coloured nut. Variable moisture content. Extremely dusty.

Characteristics

Physical properties			
Size	**Angle of repose**	**Bulk density (kg/m^3)**	**Stowage factor (m^3/t)**
Not applicable	Not applicable	304	3.29
Hazard classification			
Class	**Subsidiary hazard(s)**	**MHB**	**Group**
Not applicable	Not applicable	Not applicable	C

Hazard
May heat spontaneously.
This cargo is non-combustible or has a low fire risk.

Stowage and segregation
"Away from" sources of heat.

Hold cleanliness
Clean and dry as relevant to the hazards of the cargo.

Weather precautions
No special requirements.

Loading
Trim in accordance with the relevant provisions required under sections 4 and 5 of this Code.

Precautions
Appropriate precautions shall be taken to protect machinery and accommodation spaces from the dust of the cargo. Bilge wells of the cargo spaces shall be protected from ingress of the cargo. Due consideration shall be given to protect equipment from the dust of the cargo. Persons who may be exposed to the dust of the cargo shall wear protective clothing, goggles or other equivalent dust eye-protection and dust filter masks, as necessary.

Ventilation
The cargo spaces carrying this cargo shall not be ventilated during voyage.

Carriage
No special requirements.

Discharge
No special requirements.

Clean-up
No special requirements.

PEAT MOSS

Description

Surface mined from mires, bogs, fens, muskeg and swamps. Types include moss peat, sedge peat and grass peat. Physical properties depend on organic matter, water and air content, botanical decomposition and degree of decomposition.
May range from a highly fibrous cohesive mass of plant remains which, when squeezed in its natural state, exudes clear to slightly coloured water, to a well decomposed, largely amorphous material with little or no separation of liquid from solids when squeezed.
Typically air-dried peat has low density, high compressibility and high water content; in its natural state it can hold 90 percent or more of water by weight when saturated.

Characteristics

Physical properties			
Size	**Angle of repose**	**Bulk density (kg/m^3)**	**Stowage factor (m^3/t)**
Fine powder	Not applicable	80 to 500	2.00 to 12.50
Hazard classification			
Class	**Subsidiary hazard(s)**	**MHB**	**Group**
Not applicable	Not applicable	CR	A and B

Hazard

This cargo may liquefy if shipped at a moisture content in excess of its transportable moisture limit (TML). See sections 7 and 8 of this Code.
Oxygen depletion and an increase in carbon dioxide in cargo and adjacent spaces.
Risk of dust explosion when loading. Caution should be exercised when walking or landing heavy machinery on the surface of uncompressed peat moss.
Dust may cause eye, nose and respiratory irritation.
This cargo is non-combustible or has a low fire risk.

Stowage and segregation

No special requirements.

Hold cleanliness

Clean and dry as relevant to the hazards of the cargo.

Weather precautions

Prior to loading, this cargo shall be stockpiled under cover to effect drainage for reduction of moisture content. This cargo shall be kept as dry as practicable. This cargo shall not be handled during precipitation. During handling of this cargo all non-working hatches of the cargo spaces into which this cargo is loaded, or to be loaded, shall be closed.

Loading

Trim in accordance with the relevant provisions required under sections 4 and 5 of this Code.
Peat moss having a moisture content of more than 80% by weight shall only be carried on a ship complying with the requirements in 7.3.2 of this Code.

Precautions

Bilge wells shall be clean, dry and covered as appropriate, to prevent ingress of the cargo.
Appropriate precautions shall be taken to protect machinery and accommodation spaces from the dust of the cargo. Bilge wells of the cargo spaces shall be protected from ingress of the cargo. Due consideration shall be given to protect equipment from the dust of the cargo. Persons who may be exposed to the dust of the cargo shall wear goggles or other equivalent dust eye-protection and dust filter masks. Those persons shall wear protective clothing, as necessary.

All personnel of the ship carrying this cargo and all personnel involved in handling of this cargo shall be cautioned that washing hands before eating or smoking and prompt treatment of cuts and scrapes are necessary in case of contact with this cargo or its dust. Entry of personnel into cargo spaces shall not be permitted until tests have been carried out and it has been established that the oxygen content has been restored to a normal level.*

Ventilation
Surface ventilation only, either natural or mechanical, shall be conducted, as necessary, during the voyage for this cargo.

Carriage
No special requirements.

Discharge
No special requirements.

Clean-up
No special requirements.

Emergency procedures

Special emergency equipment to be carried Nil
Emergency procedures Nil **Emergency action in the event of fire** Batten down; use ship's fixed fire-fighting installation, if fitted. Exclusion of air may be sufficient to control the fire. **Medical first aid** Refer to the *Medical First Aid Guide* (MFAG), as amended.

* Refer to *Revised recommendations for entering enclosed spaces aboard ships* (resolution A.1050(27)).

PEBBLES (sea)

Description
Round pebbles. Rolls very easily.

Characteristics

Physical properties			
Size	**Angle of repose**	**Bulk density (kg/m^3)**	**Stowage factor (m^3/t)**
30 mm to 110 mm	Not applicable	1,695	0.59
Hazard classification			
Class	**Subsidiary hazard(s)**	**MHB**	**Group**
Not applicable	Not applicable	Not applicable	C

Hazard
No special hazards.
This cargo is non-combustible or has a low fire risk.

Stowage and segregation
No special requirements.

Hold cleanliness
No special requirements.

Weather precautions
No special requirements.

Loading
Trim in accordance with the relevant provisions required under sections 4 and 5 of this Code.

Precautions
This cargo shall be loaded carefully to prevent damage to the tank top.

Ventilation
No special requirements.

Carriage
No special requirements.

Discharge
No special requirements.

Clean-up
No special requirements.

PELLETS (concentrates)

Description
Concentrate ore which has been pelletized. Moisture up to 6%.

Characteristics

Physical properties			
Size	**Angle of repose**	**Bulk density (kg/m^3)**	**Stowage factor (m^3/t)**
10 mm approximately	Not applicable	2,128	0.47
Hazard classification			
Class	**Subsidiary hazard(s)**	**MHB**	**Group**
Not applicable	Not applicable	Not applicable	C

Hazard
No special hazards.
This cargo is non-combustible or has a low fire risk.

Stowage and segregation
No special requirements.

Hold cleanliness
Clean and dry as relevant to the hazards of the cargo.

Weather precautions
No special requirements.

Loading
Trim in accordance with the relevant provisions required under sections 4 and 5 of this Code.

As the density of the cargo is extremely high, the tank top may be overstressed unless the cargo is evenly spread across the tank top to equalize the weight distribution. Due consideration shall be given to ensure that the tank top is not overstressed during the voyage and during loading by a pile of the cargo.

Precautions
No special requirements.

Ventilation
No special requirements.

Carriage
No special requirements.

Discharge
No special requirements.

Clean-up
No special requirements.

PERLITE ROCK

Description
Clay-like and dusty. Light grey. Odourless. Moisture: 0.5% to 1%.

Characteristics

Physical properties			
Size	**Angle of repose**	**Bulk density (kg/m^3)**	**Stowage factor (m^3/t)**
Not applicable	Not applicable	943 to 1,020	0.98 to 1.06
Hazard classification			
Class	**Subsidiary hazard(s)**	**MHB**	**Group**
Not applicable	Not applicable	Not applicable	C

Hazard
No special hazards.
This cargo is non-combustible or has a low fire risk.

Stowage and segregation
No special requirements.

Hold cleanliness
No special requirements.

Weather precautions
No special requirements.

Loading
Trim in accordance with the relevant provisions required under sections 4 and 5 of this Code.

Precautions
Appropriate precautions shall be taken to protect machinery and accommodation spaces from the dust of the cargo. Bilge wells of the cargo spaces shall be protected from ingress of the cargo. Due consideration shall be given to protect equipment from the dust of the cargo. Persons who may be exposed to the dust of the cargo shall wear protective clothing, goggles or other equivalent dust eye-protection and dust filter masks, as necessary.

Ventilation
No special requirements.

Carriage
No special requirements.

Discharge
No special requirements.

Clean-up
No special requirements.

PETROLEUM COKE (calcined or uncalcined)

Description
Black, finely divided residue from petroleum refining in the form of powder and small pieces. The provisions of this schedule should not apply to materials having a temperature below 55°C when loaded.

Characteristics

Physical properties			
Size	**Angle of repose**	**Bulk density (kg/m^3)**	**Stowage factor (m^3/t)**
Powder to small pieces	Not applicable	599 to 800	1.25 to 1.67
Hazard classification			
Class	**Subsidiary hazard(s)**	**MHB**	**Group**
Not applicable	Not applicable	SH	B

Hazard
Uncalcined petroleum coke is liable to heat and ignite spontaneously when not loaded and transported under the provisions of this entry.
This cargo is non-combustible or has a low fire risk.

Stowage and segregation
"Separated from" foodstuffs.
"Separated longitudinally by an intervening complete compartment or hold from" all goods of class 1, divisions 1.1 and 1.5.
"Separated by a complete compartment or hold from" all other hazardous materials and dangerous goods (goods in packaged form and solid bulk materials).

Hold cleanliness
Clean and dry as relevant to the hazards of the cargo.

Weather precautions
No special requirements.

Loading
1 When the cargo is loaded in a cargo space over a tank containing fuel or other material having a flashpoint under 93°C, the cargo having a temperature of 55°C or higher shall not be loaded in the cargo space, unless part of the cargo having a temperature 44°C or lower is loaded in a layer of at least 0.6 m thickness throughout the cargo space prior to loading the cargo having a temperature of 55°C or higher.
2 When the cargo having a temperature of 55°C or higher is loaded in accordance with the above requirement and the thickness of the layer of the cargo to be loaded is bigger than 1.0 m, the cargo shall first be loaded within a layer, the thickness of which is between 0.6 m and 1.0 m.
3 After the completion of loading operation specified in the above paragraphs, the loading operation may proceed.

The cargo shall be trimmed in accordance with the cargo information required by section 4 of this Code.

Precautions
This cargo shall not be loaded when the temperature of this cargo exceeds 107°C. The master shall post warnings about the high temperature of this cargo near the cargo spaces.

Ventilation
No special requirements.

Carriage
No special requirements.

Discharge
No special requirements.

Clean-up
No special requirements.

Emergency procedures

Special emergency equipment to be carried Protective clothing (gloves, boots, coveralls and headgear). Self-contained breathing apparatus. Spray nozzles.
Emergency procedures Wear protective clothing and self-contained breathing apparatus. **Emergency action in the event of fire** Batten down; use of ship's fixed fire-fighting installation, if available. Exclusion of air may be sufficient to control fire. **Medical first aid** Refer to the *Medical First Aid Guide* (MFAG), as amended.

PHOSPHATE (defluorinated)

Description
Granular, similar to fine sand. Shipped dry. Dark grey. No moisture content.

Characteristics

Physical properties			
Size	**Angle of repose**	**Bulk density (kg/m^3)**	**Stowage factor (m^3/t)**
Not applicable	Not applicable	893	1.12
Hazard classification			
Class	**Subsidiary hazard(s)**	**MHB**	**Group**
Not applicable	Not applicable	Not applicable	C

Hazard
No special hazards.
This cargo is non-combustible or has a low fire risk.

Stowage and segregation
No special requirements.

Hold cleanliness
No special requirements.

Weather precautions
No special requirements.

Loading
Trim in accordance with the relevant provisions required under sections 4 and 5 of this Code.

Precautions
Appropriate precautions shall be taken to protect machinery and accommodation spaces from the dust of the cargo. Bilge wells of the cargo spaces shall be protected from ingress of the cargo. Due consideration shall be given to protect equipment from the dust of the cargo. Persons who may be exposed to the dust of the cargo shall wear protective clothing, goggles or other equivalent dust eye-protection and dust filter masks, as necessary.

Ventilation
No special requirements.

Carriage
No special requirements.

Discharge
No special requirements.

Clean-up
No special requirements.

PHOSPHATE ROCK (calcined)

Description
Usually in the form of fine ground rock or prills. Extremely dusty. Hygroscopic.

Characteristics

Physical properties			
Size	**Angle of repose**	**Bulk density (kg/m^3)**	**Stowage factor (m^3/t)**
Not applicable	Not applicable	794 to 1,563	0.64 to 1.26
Hazard classification			
Class	**Subsidiary hazard(s)**	**MHB**	**Group**
Not applicable	Not applicable	Not applicable	C

Hazard
No special hazards.
This cargo is hygroscopic and will cake if wet.
This cargo is non-combustible or has a low fire risk.

Stowage and segregation
No special requirements.

Hold cleanliness
No special requirements.

Weather precautions
This cargo shall be kept as dry as practicable before loading, during loading and during voyage. This cargo shall not be loaded during precipitation. During loading of this cargo, all non-working hatches of the cargo spaces to which this cargo is loaded, or to be loaded, shall be closed.

Loading
Trim in accordance with the relevant provisions required under sections 4 and 5 of this Code.

Precautions
Appropriate precautions shall be taken to protect machinery and accommodation spaces from the dust of the cargo. Bilge wells of the cargo spaces shall be protected from ingress of the cargo. Due consideration shall be given to protect equipment from the dust of the cargo. Persons who may be exposed to the dust of the cargo shall wear protective clothing, goggles or other equivalent dust eye-protection and dust filter masks, as necessary.

Ventilation
No special requirements.

Carriage
No special requirements.

Discharge
Phosphate rock (calcined) is hygroscopic and may cake in overhangs, impairing safety during discharge. If this cargo has hardened, it shall be trimmed to avoid the formation of overhangs, as necessary.

Clean-up
No special requirements.

PHOSPHATE ROCK (uncalcined)

Description
Phosphate rock is an ore in which phosphorus and oxygen are chemically united. Depending on the source, it is tan to dark grey, dry and dusty. Moisture: 0% to 2%. Depending on its source this cargo may have flow characteristic, but once settled it is not liable to shift.

Characteristics

Physical properties			
Size	**Angle of repose**	**Bulk density (kg/m^3)**	**Stowage factor (m^3/t)**
Powder to lumps	Not applicable	1,250 to 1,429	0.70 to 0.80
Hazard classification			
Class	**Subsidiary hazard(s)**	**MHB**	**Group**
Not applicable	Not applicable	Not applicable	C

Hazard
No special hazards.
This cargo is non-combustible or has a low fire risk.

Stowage and segregation
No special requirements.

Hold cleanliness
No special requirements.

Weather precautions
No special requirements.

Loading
Trim in accordance with the relevant provisions required under sections 4 and 5 of this Code.

Precautions
Appropriate precautions shall be taken to protect machinery and accommodation spaces from the dust of the cargo. Bilge wells of the cargo spaces shall be protected from ingress of the cargo. Due consideration shall be given to protect equipment from the dust of the cargo. Persons who may be exposed to the dust of the cargo shall wear protective clothing, goggles or other equivalent dust eye-protection and dust filter masks, as necessary.

Ventilation
No special requirements.

Carriage
No special requirements.

Discharge
No special requirements.

Clean-up
No special requirements.

PIG IRON

Description
Foundry pig iron is cast in 28 grades into 20 kg pigs. In a random heap, pig iron occupies approximately 50% of the apparent volume.

Characteristics

Physical properties			
Size	**Angle of repose**	**Bulk density (kg/m^3)**	**Stowage factor (m^3/t)**
550 mm x 90 mm x 80 mm	Not applicable	3,333 to 3,571	0.28 to 0.30
Hazard classification			
Class	**Subsidiary hazard(s)**	**MHB**	**Group**
Not applicable	Not applicable	Not applicable	C

Hazard
No special hazards.
This cargo is non-combustible or has a low fire risk.

Stowage and segregation
No special requirements.

Hold cleanliness
No special requirements.

Weather precautions
No special requirements.

Loading
This cargo is usually loaded using tubs. In such case, tubs are usually lowered by a crane into the hold and the contents are spilled out. When this cargo is loaded using tubs, the first few tubs shall be lowered onto the tank top to avoid damage.

Trim in accordance with the relevant provisions required under sections 4 and 5 of this Code.

As the density of the cargo is extremely high, the tank top may be overstressed unless the cargo is evenly spread across the tank top to equalize the weight distribution. Due consideration shall be given to ensure that the tank top is not overstressed during the voyage and during loading by a pile of the cargo.

Precautions
No special requirements.

Ventilation
No special requirements.

Carriage
No special requirements.

Discharge
No special requirements.

Clean-up
Prior to washing out the residues of this cargo, the bilge wells of the cargo spaces shall be cleaned.

PITCH PRILL
(see appendix to this schedule)

Description
Pitch prill is made from tar produced during the coking of coal. It is black with a distinctive odour. It is extruded into its characteristic pencil shape to make handling easier.
Cargo softens between 40ºC to 50ºC. Melting point: 105ºC to 107ºC.

Characteristics

Physical properties			
Size	**Angle of repose**	**Bulk density (kg/m^3)**	**Stowage factor (m^3/t)**
9 mm diameter and up to 7 mm long	Not applicable	500 to 800	1.25 to 2.00
Hazard classification			
Class	**Subsidiary hazard(s)**	**MHB**	**Group**
Not applicable	Not applicable	CB and/or CR	B

Hazard
Melts when heated. Combustible, burns with a dense black smoke. Dust may cause skin and eye irritation. Normally this cargo has a low fire risk. However powder of the cargo is easy to ignite and may cause fire and explosion. Special care should be taken for preventing fire during loading or discharging.

Stowage and segregation
Segregation as required for class 4.1 materials.

Hold cleanliness
No special requirements.

Weather precautions
Refer to the appendix to this schedule.

Loading
Trim in accordance with the relevant provisions required under sections 4 and 5 of this Code.

This cargo shall not be stowed in a cargo space adjacent to heated tanks to avoid softening and melting of the cargo.

Precautions
Refer to the appendix to this schedule.

Ventilation
Surface ventilation only, either natural or mechanical, shall be conducted, as necessary, during the voyage for this cargo.

Carriage
After the completion of loading of this cargo, the hatches of the cargo spaces shall be sealed. Condensation in the cargo spaces carrying this cargo shall be checked regularly during voyage.

Discharge
Adequate measures shall be taken to prevent dust generation.

Clean-up
No special requirements.

Emergency procedures

Special emergency equipment to be carried Protective clothing (gloves, boots, overalls and headgear). Self-contained breathing apparatus, spray nozzles.
Emergency procedures Wear protective clothing and self-contained breathing apparatus. **Emergency action in the event of fire** Batten down; use ship's fixed fire-fighting installation, if available. Exclusion of air may be sufficient to control fire. **Medical first aid** Refer to the *Medical First Aid Guide* (MFAG), as amended.

APPENDIX

PITCH PRILL

General precautions

1 Personnel engaged in loading shall be supplied with gloves, dust masks, approved protective clothing and goggles.

2 Eyewashes and sunscreen creams shall be readily available.

3 Number of personnel in area of loading shall be kept to a minimum. Personnel in area of loading shall be aware of all the hazards involved.

4 Personnel engaged in the handling of this cargo shall wash well and keep out of the sun for a few days, after the cargo handling.

5 The hatch shall be closed after loading or discharge has ceased and the ship shall be washed out to remove all dust.

6 Due consideration shall be given to suspending cargo handling when wind is blowing dust.

7 After completion of discharging this cargo, the deck shall be cleaned up to remove all spillages.

8 Ventilation of the accommodation spaces shall be closed and the air conditioning systems for the accommodation spaces shall be on recycle mode when this cargo is being handled – either loading or discharging.

9 The cargo dust is easily ignited and may cause fire and explosion. Special care shall be taken to prevent fire during loading and discharging the cargo.

POTASH

Description
Brown, pink or white in colour, potash is produced in granular crystals. It is odourless and hygroscopic.

Characteristics

Physical properties			
Size	**Angle of repose**	**Bulk density (kg/m^3)**	**Stowage factor (m^3/t)**
Powder up to 4 mm	32° to 35°	971 to 1,299	0.77 to 1.03
Hazard classification			
Class	**Subsidiary hazard(s)**	**MHB**	**Group**
Not applicable	Not applicable	Not applicable	C

Hazard
No special hazards.
This cargo is hygroscopic and will cake if wet.
This cargo is non-combustible or has a low fire risk.

Stowage and segregation
No special requirements.

Hold cleanliness
No special requirements.

Weather precautions
This cargo shall be kept as dry as practicable before loading, during loading and during voyage. This cargo shall not be loaded during precipitation. During loading of this cargo, all non-working hatches of the cargo spaces to which this cargo is loaded, or to be loaded, shall be closed.

Loading
Trim in accordance with the relevant provisions required under sections 4 and 5 of this Code.

Precautions
No special requirements.

Ventilation
The cargo spaces carrying this cargo shall not be ventilated during voyage.

Carriage
After the completion of loading of this cargo, the hatches of the cargo spaces shall be sealed to prevent water ingress, as necessary.

Discharge
Potash is hygroscopic and may cake in overhangs, impairing safety during discharge. If this cargo has hardened, it shall be trimmed to avoid the formation of overhangs, as necessary.

Clean-up
This cargo is mildly corrosive. After discharge of this cargo, the cargo spaces and the bilge wells shall be thoroughly swept clean and washed out to remove all traces of the cargo, except in the case that the cargo to be loaded subsequent to discharge is POTASH.

POTASSIUM CHLORIDE

Description
Brown, pink or white in colour, powder. Potassium chloride is produced in granular crystals. It is odourless and is soluble in water. Hygroscopic.

Characteristics

Physical properties			
Size	**Angle of repose**	**Bulk density (kg/m^3)**	**Stowage factor (m^3/t)**
Up to 4 mm	30° to 47°	893 to 1,235	0.81 to 1.12
Hazard classification			
Class	**Subsidiary hazard(s)**	**MHB**	**Group**
Not applicable	Not applicable	Not applicable	C

Hazard
Even though this cargo is classified as non-hazardous, it may cause heavy corrosion when wet.
This cargo is hygroscopic and will cake if wet.
This cargo is non-combustible or has a low fire risk.

Stowage and segregation
No special requirements.

Hold cleanliness
Clean and dry as relevant to the hazards of the cargo.

Weather precautions
This cargo shall be kept as dry as practicable. This cargo shall not be handled during precipitation. During handling of this cargo, all non-working hatches of the cargo spaces into which this cargo is loaded, or to be loaded, shall be closed.

Loading
Trim in accordance with the relevant provisions required under sections 4 and 5 of this Code.

Precautions
No special requirements.

Ventilation
The cargo spaces carrying this cargo shall not be ventilated during voyage.

Carriage
After the completion of loading of this cargo, the hatches of the cargo spaces shall be sealed to prevent water ingress.

Discharge
Potassium chloride is hygroscopic and may cake in overhangs, impairing safety during discharge. If this cargo has hardened, it shall be trimmed to avoid the formation of overhangs, as necessary.

Clean-up
After discharge of this cargo, the cargo spaces and the bilge wells shall be swept clean and thoroughly washed out.

POTASSIUM NITRATE UN 1486

Description
Transparent, colourless or white crystalline powder or crystals. Hygroscopic.

Characteristics

Physical properties			
Size	**Angle of repose**	**Bulk density (kg/m^3)**	**Stowage factor (m^3/t)**
Crystals or powder	30° to 31°	1,136	0.88
Hazard classification			
Class	**Subsidiary hazard(s)**	**MHB**	**Group**
5.1	Not applicable		B

Hazard
Oxidizes when wet. Mixtures with combustible materials are readily ignited and may burn fiercely.
This cargo is hygroscopic and will cake if wet.

Stowage and segregation
"Separated from" foodstuffs.

Hold cleanliness
Clean and dry as relevant to the hazards of the cargo.

Weather precautions
This cargo shall be kept as dry as practicable. This cargo shall not be handled during precipitation. During handling of this cargo, all non-working hatches of the cargo spaces into which this cargo is loaded, or to be loaded, shall be closed.

Loading
Trim in accordance with the relevant provisions required under sections 4 and 5 of this Code.

Precautions
Due consideration shall be given to prevent contact of the cargo and combustible materials. The master and officers are to note that the ship's fixed gas fire-fighting installation will be ineffective on fires involving this cargo and that applying copious amounts of water may be necessary.

Ventilation
The cargo spaces carrying this cargo shall not be ventilated during voyage.

Carriage
No special requirements.

Discharge
Potassium nitrate is hygroscopic and may cake in overhangs, impairing safety during discharge. If this cargo has hardened, it shall be trimmed to avoid the formation of overhangs, as necessary.

Clean-up
No special requirements.

Emergency procedures

Special emergency equipment to be carried Protective clothing (gloves, boots, coveralls and headgear). Self-contained breathing apparatus. Spray nozzles.
Emergency procedures Wear protective clothing and self-contained breathing apparatus. **Emergency action in the event of fire** Use copious quantities of water, which is best applied in the form of a spray to avoid disturbing the surface of the material. The material may fuse or melt, in which condition application of water may result in extensive scattering of the molten materials. Exclusion of air or the use of CO_2 will not control the fire. Due consideration should be given to the effect on the stability of the ship due to accumulated water. **Medical first aid** Refer to the *Medical First Aid Guide* (MFAG), as amended.

Remarks
This material is non-combustible unless contaminated.

POTASSIUM SULPHATE

Description
Hard crystals or powder. Colourless or white.

Characteristics

Physical properties			
Size	**Angle of repose**	**Bulk density (kg/m^3)**	**Stowage factor (m^3/t)**
Not applicable	31°	1,111	0.90
Hazard classification			
Class	**Subsidiary hazard(s)**	**MHB**	**Group**
Not applicable	Not applicable	Not applicable	C

Hazard
No special hazards.
This cargo is non-combustible or has a low fire risk.

Stowage and segregation
No special requirements.

Hold cleanliness
No special requirements.

Weather precautions
No special requirements.

Loading
Trim in accordance with the relevant provisions required under sections 4 and 5 of this Code.

Precautions
No special requirements.

Ventilation
No special requirements.

Carriage
No special requirements.

Discharge
No special requirements.

Clean-up
No special requirements.

PUMICE

Description
Highly porous rock of volcanic origin. Greyish-white.

Characteristics

Physical properties			
Size	**Angle of repose**	**Bulk density (kg/m^3)**	**Stowage factor (m^3/t)**
Powder to lumps	Not applicable	308 to 526	1.90 to 3.25
Hazard classification			
Class	**Subsidiary hazard(s)**	**MHB**	**Group**
Not applicable	Not applicable	Not applicable	C

Hazard
No special hazards.
This cargo is non-combustible or has a low fire risk.

Stowage and segregation
No special requirements.

Hold cleanliness
No special requirements.

Weather precautions
No special requirements.

Loading
Trim in accordance with the relevant provisions required under sections 4 and 5 of this Code.

Precautions
No special requirements.

Ventilation
No special requirements.

Carriage
No special requirements.

Discharge
No special requirements.

Clean-up
No special requirements.

PYRITE (containing copper and iron)
This cargo can be categorized as group A or C. This cargo entry is for cargo in group C.

Description
Iron disulphide, containing copper and iron. Moisture 0% to 7%. Extremely dusty.

Characteristics

Physical properties			
Size	**Angle of repose**	**Bulk density (kg/m^3)**	**Stowage factor (m^3/t)**
Fines to lumps of 300 mm	Not applicable	2,000 to 3,030	0.33 to 0.50
Hazard classification			
Class	**Subsidiary hazard(s)**	**MHB**	**Group**
Not applicable	Not applicable	Not applicable	C

Hazard
No special hazards.
This cargo is non-combustible or has a low fire risk.

Stowage and segregation
No special requirements.

Hold cleanliness
No special requirements.

Weather precautions
No special requirements.

Loading
Trim in accordance with the relevant provisions required under sections 4 and 5 of this Code.

As the density of the cargo is extremely high, the tank top may be overstressed unless the cargo is evenly spread across the tank top to equalize the weight distribution. Due consideration shall be given to ensure that the tank top is not overstressed during the voyage and during loading by a pile of the cargo.

Precautions
Appropriate precautions shall be taken to protect machinery and accommodation spaces from the dust of the cargo. Bilge wells of the cargo spaces shall be protected from ingress of the cargo. Due consideration shall be given to protect equipment from the dust of the cargo. Persons who may be exposed to the dust of the cargo shall wear protective clothing, goggles or other equivalent dust eye-protection and dust filter masks, as necessary.

Ventilation
No special requirements.

Carriage
No special requirements.

Discharge
No special requirements.

Clean-up
No special requirements.

PYRITES, CALCINED (calcined pyrites)

Description
Dust to fines, calcined pyrites is the residual product from the chemical industry where all types of metal sulphides are either used for the production of sulphuric acid or are processed to recover the elemental metals – copper, lead, zinc, etc. The acidity of the residue can be considerable, in particular, in the presence of water or moist air, where pH values between 1.3 and 2.1 are frequently noted.

Characteristics

Physical properties			
Size	**Angle of repose**	**Bulk density (kg/m^3)**	**Stowage factor (m^3/t)**
Not applicable	Not applicable	2,326	0.43
Hazard classification			
Class	**Subsidiary hazard(s)**	**MHB**	**Group**
Not applicable	Not applicable	TX and/or CR	A and B

Hazard
Highly corrosive to steel when wet. Inhalation of dust is irritating and harmful. This cargo may liquefy if shipped at a moisture content in excess of its transportable moisture limit (TML). See sections 7 and 8 of this Code.
This cargo is non-combustible or has a low fire risk.

Stowage and segregation
"Separated from" foodstuffs.

Hold cleanliness
Due consideration shall be given to cleaning and drying of the cargo spaces.

Weather precautions
This cargo shall be kept as dry as practicable before loading, during loading and during voyage. This cargo shall not be loaded during precipitation. During loading of this cargo, all non-working hatches of the cargo spaces to which this cargo is loaded, or to be loaded, shall be closed.

Loading
Trim in accordance with the relevant provisions required under sections 4 and 5 of this Code.

As the density of the cargo is extremely high, the tank top may be overstressed unless the cargo is evenly spread across the tank top to equalize the weight distribution. Due consideration shall be given to ensure that the tank top is not overstressed during the voyage and during loading by a pile of the cargo.

Precautions
Bilge wells shall be clean, dry and covered as appropriate, to prevent ingress of the cargo. Ceiling boards shall be removed or sealed to prevent penetration by this cargo. The tank top on which this cargo is to be loaded shall be covered with protective coating such as lime-wash before loading to avoid any potential corrosive reaction between the cargo, water and steel.
Appropriate precautions shall be taken to protect machinery and accommodation spaces from the dust of the cargo. Bilge wells of the cargo spaces shall be protected from ingress of the cargo. Due consideration shall be given to protect equipment from the dust of the cargo. Persons who may be exposed to the dust of the cargo shall wear goggles or other equivalent dust eye-protection and dust filter masks. Those persons shall wear protective clothing, as necessary.

Ventilation
No special requirements.

Carriage
After the completion of loading of this cargo, the hatches of the cargo spaces shall be sealed to prevent water ingress, as necessary.

Discharge
No special requirements.

Clean-up
No special requirements.

Emergency procedures

Special emergency equipment to be carried Nil
Emergency procedures Nil **Emergency action in the event of fire** Nil (non-combustible). **Medical first aid** Refer to the *Medical First Aid Guide* (MFAG), as amended.

PYROPHYLLITE

Description
A natural hydrous aluminium silicate. Chalk-white. May be dusty.
Lumps: 75%, Rubble: 20%, Fines: 5%.

Characteristics

Physical properties			
Size	**Angle of repose**	**Bulk density (kg/m^3)**	**Stowage factor (m^3/t)**
Lumps to fines	Not applicable	2,000	0.50
Hazard classification			
Class	**Subsidiary hazard(s)**	**MHB**	**Group**
Not applicable	Not applicable	Not applicable	C

Hazard
No special hazards.
This cargo is non-combustible or has a low fire risk.

Stowage and segregation
No special requirements.

Hold cleanliness
No special requirements.

Weather precautions
No special requirements.

Loading
Trim in accordance with the relevant provisions required under sections 4 and 5 of this Code.

As the density of the cargo is extremely high, the tank top may be overstressed unless the cargo is evenly spread across the tank top to equalize the weight distribution. Due consideration shall be given to ensure that the tank top is not overstressed during the voyage and during loading by a pile of the cargo.

Precautions
Appropriate precautions shall be taken to protect machinery and accommodation spaces from the dust of the cargo. Bilge wells of the cargo spaces shall be protected from ingress of the cargo. Due consideration shall be given to protect equipment from the dust of the cargo. Persons who may be exposed to the dust of the cargo shall wear protective clothing, goggles or other equivalent dust eye-protection and dust filter masks, as necessary.

Ventilation
No special requirements.

Carriage
No special requirements.

Discharge
No special requirements.

Clean-up
No special requirements.

QUARTZ

Description
Crystalline lumps.

Characteristics

Physical properties			
Size	**Angle of repose**	**Bulk density (kg/m^3)**	**Stowage factor (m^3/t)**
Lumps: 50 mm to 300 mm	Not applicable	1,667	0.60
Hazard classification			
Class	**Subsidiary hazard(s)**	**MHB**	**Group**
Not applicable	Not applicable	Not applicable	C

Hazard
No special hazards.
This cargo is non-combustible or has a low fire risk.

Stowage and segregation
No special requirements.

Hold cleanliness
No special requirements.

Weather precautions
No special requirements.

Loading
Trim in accordance with the relevant provisions required under sections 4 and 5 of this Code.

Precautions
No special requirements.

Ventilation
No special requirements.

Carriage
No special requirements.

Discharge
No special requirements.

Clean-up
No special requirements.

QUARTZITE

Description
Quartzite is a compact, granular, metamorphosed sandstone containing quartz. It is white, red, brown or grey in colour and its size varies from large rocks to pebbles. It may also be shipped in semi-crushed and graded sizes.

Characteristics

Physical properties			
Size	**Angle of repose**	**Bulk density (kg/m^3)**	**Stowage factor (m^3/t)**
10 mm to 200 mm	Not applicable	1,563	0.64
Hazard classification			
Class	**Subsidiary hazard(s)**	**MHB**	**Group**
Not applicable	Not applicable	Not applicable	C

Hazard
No special hazards.
Dust of this cargo is very abrasive.
This cargo is non-combustible or has a low fire risk.

Stowage and segregation
No special requirements.

Hold cleanliness
No special requirements.

Weather precautions
No special requirements.

Loading
Trim in accordance with the relevant provisions required under sections 4 and 5 of this Code.

Precautions
Protect machinery and equipment from dust. Appropriate precautions shall be taken to protect machinery and accommodation spaces from the dust of the cargo. Bilge wells of the cargo spaces shall be protected from ingress of the cargo. Due consideration shall be given to protect equipment from the dust of the cargo. Persons who may be exposed to the dust of the cargo shall wear goggles or other equivalent dust eye-protection and dust filter masks. Those persons shall wear protective clothing, as necessary.

Ventilation
No special requirements.

Carriage
No special requirements.

Discharge
No special requirements.

Clean-up
No special requirements.

RADIOACTIVE MATERIAL, LOW SPECIFIC ACTIVITY (LSA-I), non-fissile or fissile-excepted UN 2912

Description
This schedule includes ores containing naturally occurring radionuclides (e.g. uranium, thorium) and natural or depleted uranium and thorium concentrates of such ores, including metals, mixtures and compounds.

Characteristics

Physical properties			
Size	**Angle of repose**	**Bulk density (kg/m^3)**	**Stowage factor (m^3/t)**
Not applicable	Not applicable	-	-
Hazard classification			
Class	**Subsidiary hazard(s)**	**MHB**	**Group**
7	Not applicable		B

Hazard
Low radiotoxicity. Some materials may possess chemical hazards.
This cargo is non-combustible or has a low fire risk.

Stowage and segregation
"Separated from" foodstuffs.

Hold cleanliness
Clean and dry as relevant to the hazards of the cargo.

Weather precautions
This cargo shall be kept as dry as practicable. This cargo shall not be handled during precipitation. During handling of this cargo, all non-working hatches of the cargo spaces into which this cargo is loaded, or to be loaded, shall be closed.

Loading
Trim in accordance with the relevant provisions required under sections 4 and 5 of this Code.

Precautions
Personnel shall not be unnecessarily exposed to dust of this cargo. Persons who may be exposed to the dust of the cargo shall wear protective clothing, goggles or other equivalent dust eye-protection and dust filter masks. There shall be no leakage outside the cargo space in which this cargo is stowed.

Ventilation
The cargo spaces carrying this cargo shall not be ventilated during voyage.

Carriage
All instructions provided by the shipper shall be followed for the carriage of this cargo.

Discharge
All instructions provided by the shipper shall be followed for the discharge of this cargo.

Clean-up
Cargo spaces used for this cargo shall not be used for other goods until decontaminated. Refer to 9.3.2.3 of this Code.

Emergency procedures

Special emergency equipment to be carried Protective clothing (gloves, boots, coveralls and headgear). Self-contained breathing apparatus.
Emergency procedures Wear protective clothing and self-contained breathing apparatus. **Emergency action in the event of fire** Batten down; use ship's fixed fire-fighting installation, if fitted. Use water spray to control spread of dust, if necessary. **Medical first aid** Refer to the *Medical First Aid Guide* (MFAG), as amended. Radio for medical advice.

Remarks

Most materials are likely to be non-combustible. Speedily collect and isolate potentially contaminated equipment and cover. Seek expert advice.

RADIOACTIVE MATERIAL, SURFACE CONTAMINATED OBJECTS (SCO-I), non-fissile or fissile-excepted UN 2913

Description
The radioactivity of SCO-I is low. This schedule includes solid objects of non-radioactive material having a radioactive material distributed on its surfaces which:

1 the non-fixed contamination on the accessible surface, averaged over 300 cm^2 (or the area of the surface if less than 300 cm^2), does not exceed 4 Bq/cm^2 for beta and gamma emitters and low-toxicity alpha emitters, or 0.4 Bq/cm^2 for all other alpha emitters;

2 the fixed contamination on the accessible surface, averaged over 300 cm^2 (or the area of the surface if less than 300 cm^2), does not exceed 4×10^4 Bq/cm^2 for beta and gamma emitters and low-toxicity alpha emitters, or 4×10^3 Bq/cm^2 for all other alpha emitters; and

3 the non-fixed contamination plus the fixed contamination on the inaccessible surface, averaged over 300 cm^2 (or the area of the surface if less than 300 cm^2), does not exceed 4×10^4 Bq/cm^2 for beta and gamma emitters and low-toxicity alpha emitters, or 4×10^3 Bq/cm^2 for all other alpha emitters.

Characteristics

Physical properties			
Size	**Angle of repose**	**Bulk density (kg/m^3)**	**Stowage factor (m^3/t)**
Not applicable	Not applicable	-	-
Hazard classification			
Class	**Subsidiary hazard(s)**	**MHB**	**Group**
7	Not applicable		B

Hazard
Low radioactivity.
This cargo is non-combustible or has a low fire risk.

Stowage and segregation
"Separated from" foodstuffs.

Hold cleanliness
Clean and dry as relevant to the hazards of the cargo.

Weather precautions
This cargo shall be kept as dry as practicable. This cargo shall not be handled during precipitation. During handling of this cargo, all non-working hatches of the cargo spaces into which this cargo is loaded, or to be loaded, shall be closed.

Loading
Trim in accordance with the relevant provisions required under sections 4 and 5 of this Code.

Precautions
Personnel shall not be exposed to dust of this cargo. Persons who may be exposed to the dust of the cargo shall wear protective clothing, goggles and dust filter masks. There shall be no leakage outside the cargo space in which this cargo is stowed.

Ventilation
The cargo spaces carrying this cargo shall not be ventilated during voyage.

Carriage
All instructions provided by the shipper shall be followed for the carriage of this cargo.

Discharge
All instructions provided by the shipper shall be followed for the discharge of this cargo.

Clean-up
Cargo spaces used for this cargo shall not be used for other goods until decontaminated. Refer to 9.3.2.3 of this Code.

Emergency procedures

Special emergency equipment to be carried Protective clothing (gloves, boots, coveralls and headgear). Self-contained breathing apparatus.
Emergency procedures Wear protective clothing and self-contained breathing apparatus. **Emergency action in the event of fire** Batten down; use ship's fixed fire-fighting installation, if fitted. Use water spray to control spread of dust, if necessary. **Medical first aid** Refer to the *Medical First Aid Guide* (MFAG), as amended. Radio for medical advice.

Remarks
Most materials are likely to be non-combustible. Speedily collect and isolate potentially contaminated equipment and cover. Seek expert advice.

RASORITE (ANHYDROUS)

Description
A granular, yellow-white crystalline material with little or no dust. Abrasive. Hygroscopic.

Characteristics

Physical properties			
Size	**Angle of repose**	**Bulk density (kg/m^3)**	**Stowage factor (m^3/t)**
Less than 2.36 mm	Not applicable	1,282 to 1,493	0.67 to 0.78
Hazard classification			
Class	**Subsidiary hazard(s)**	**MHB**	**Group**
Not applicable	Not applicable	Not applicable	C

Hazard
No special hazards.
This cargo is hygroscopic and will cake if wet.
This cargo is non-combustible or has a low fire risk.

Stowage and segregation
No special requirements.

Hold cleanliness
No special requirements.

Weather precautions
No special requirements.

Loading
Trim in accordance with the relevant provisions required under sections 4 and 5 of this Code.

Precautions
No special requirements.

Ventilation
No special requirements.

Carriage
No special requirements.

Discharge
Rasorite (anhydrous) is hygroscopic and may cake in overhangs, impairing safety during discharge. If this cargo has hardened, it shall be trimmed to avoid the formation of overhangs, as necessary.

Clean-up
No special requirements.

RUTILE SAND

Description
Fine-particled brown to black sand. Abrasive. Shipped dry. May be dusty.

Characteristics

Physical properties			
Size	**Angle of repose**	**Bulk density (kg/m^3)**	**Stowage factor (m^3/t)**
0.15 mm or less	Not applicable	2,500 to 2,700	0.37 to 0.40
Hazard classification			
Class	**Subsidiary hazard(s)**	**MHB**	**Group**
Not applicable	Not applicable	Not applicable	C

Hazard
No special hazards.
This cargo is non-combustible or has a low fire risk.

Stowage and segregation
No special requirements.

Hold cleanliness
No special requirements.

Weather precautions
This cargo shall be kept as dry as practicable before loading, during loading and during voyage. This cargo shall not be loaded during precipitation. During loading of this cargo, all non-working hatches of the cargo spaces to which this cargo is loaded, or to be loaded, shall be closed.

Loading
Trim in accordance with the relevant provisions required under sections 4 and 5 of this Code.

As the density of the cargo is extremely high, the tank top may be overstressed unless the cargo is evenly spread across the tank top to equalize the weight distribution. Due consideration shall be given to ensure that the tank top is not overstressed during the voyage and during loading by a pile of the cargo.

Precautions
Bilge wells shall be clean, dry and covered as appropriate, to prevent ingress of the cargo.
Appropriate precautions shall be taken to protect machinery and accommodation spaces from the dust of the cargo. Bilge wells of the cargo spaces shall be protected from ingress of the cargo. Due consideration shall be given to protect equipment from the dust of the cargo. Persons who may be exposed to the dust of the cargo shall wear goggles or other equivalent dust eye-protection and dust filter masks. Those persons shall wear protective clothing, as necessary.

Ventilation
No special requirements.

Carriage
No special requirements.

Discharge
No special requirements.

Clean-up
No special requirements.

SALT

Description
Fine white grains. Moisture variable to 5.5%. This cargo is highly soluble. In the case of ingress of water into the holds, there is a risk to the loss of the stability of the ship through dissolution of this cargo (formation of a wet base and shifting of cargo).

Characteristics

Physical properties			
Size	**Angle of repose**	**Bulk density (kg/m^3)**	**Stowage factor (m^3/t)**
Grains up to 12 mm	Not applicable	893 to 1,235	0.81 to 1.12
Hazard classification			
Class	**Subsidiary hazard(s)**	**MHB**	**Group**
Not applicable	Not applicable	Not applicable	C

Hazard
No special hazards.
This cargo is non-combustible or has a low fire risk.

Stowage and segregation
No special requirements.

Hold cleanliness
Clean and dry as relevant to the hazards of the cargo.

Weather precautions
This cargo shall be kept as dry as practicable. This cargo shall not be loaded during precipitation. During loading of this cargo, all non-working hatches of the cargo spaces into which this cargo is loaded, or to be loaded, shall be closed.

Loading
Trim in accordance with the relevant provisions required under sections 4 and 5 of this Code.

Precautions
The parts of the cargo space in contact with the cargo such as tank tops, hoppers, side plating and bulkheads shall be lime-washed or coated with paint to prevent corrosion.

Ventilation
The cargo spaces carrying this cargo shall not be ventilated during voyage.

Carriage
After the completion of loading of this cargo, the hatches of the cargo spaces shall be sealed.

Discharge
No special requirements.

Clean-up
No special requirements.

SALT CAKE

Description
Impure sodium sulphate. White in colour. Granular, shipped dry.

Characteristics

Physical properties			
Size	**Angle of repose**	**Bulk density (kg/m^3)**	**Stowage factor (m^3/t)**
10 mm to 200 mm	Not applicable	1,052 to 1,124	0.89 to 0.95
Hazard classification			
Class	**Subsidiary hazard(s)**	**MHB**	**Group**
Not applicable	Not applicable	Not applicable	C

Hazard
No special hazards.
This cargo is non-combustible or has a low fire risk.

Stowage and segregation
No special requirements.

Hold cleanliness
No special requirements.

Weather precautions
No special requirements.

Loading
Trim in accordance with the relevant provisions required under sections 4 and 5 of this Code.

Precautions
No special requirements.

Ventilation
No special requirements.

Carriage
No special requirements.

Discharge
No special requirements.

Clean-up
No special requirements.

SALT ROCK

Description
White. Moisture content 0.02%.

Characteristics

Physical properties			
Size	**Angle of repose**	**Bulk density (kg/m^3)**	**Stowage factor (m^3/t)**
Small granules	Not applicable	943 to 1,020	0.98 to 1.06
Hazard classification			
Class	**Subsidiary hazard(s)**	**MHB**	**Group**
Not applicable	Not applicable	Not applicable	C

Hazard
No special hazards.
This cargo is non-combustible or has a low fire risk.

Stowage and segregation
No special requirements.

Hold cleanliness
No special requirements.

Weather precautions
No special requirements.

Loading
Trim in accordance with the relevant provisions required under sections 4 and 5 of this Code.

Precautions
No special requirements.

Ventilation
No special requirements.

Carriage
No special requirements.

Discharge
No special requirements.

Clean-up
No special requirements.

SAND

Sands included in this schedule are:

Foundry sand
Potassium felspar sand
Quartz sand
Silica sand
Soda felspar sand

Description
Usually fine particles. Abrasive and dusty.

Characteristics

Physical properties			
Size	**Angle of repose**	**Bulk density (kg/m^3)**	**Stowage factor (m^3/t)**
0.1 mm to 5 mm	Not applicable	1,020 to 2,000	0.50 to 0.98
Hazard classification			
Class	**Subsidiary hazard(s)**	**MHB**	**Group**
Not applicable	Not applicable	Not applicable	C

Hazard
Inhalation of silica dust can result in respiratory disease. Silica particulates are easily transported by air and inhaled.
Industrial sand may be coated with resin and will cake if exposed to heat (55°C to 60°C).
This cargo is non-combustible or has a low fire risk.

Stowage and segregation
Industrial sand coated with resin shall be "separated from" sources of heat.

Hold cleanliness
Clean and dry as relevant to the hazards of the cargo.

Weather precautions
This cargo shall be kept as dry as practicable before loading, during loading and during voyage. This cargo shall not be loaded during precipitation. During loading of this cargo, all non-working hatches of the cargo spaces to which this cargo is loaded, or to be loaded, shall be closed.

Loading
Trim in accordance with the relevant provisions required under sections 4 and 5 of this Code.

When the stowage factor of this cargo is equal to or less than 0.56 m^3/t, the tank top may be overstressed unless the cargo is evenly spread across the tank top to equalize the weight distribution. Due consideration shall be given to ensure that the tank top is not overstressed during the voyage and during loading by a pile of the cargo.

Precautions
Appropriate precautions shall be taken to protect machinery and accommodation spaces from the dust of the cargo. Bilge wells of the cargo spaces shall be protected from ingress of the cargo. Due consideration shall be given to protect equipment from the dust of the cargo. Persons who may be exposed to the dust of the cargo shall wear goggles or other equivalent dust eye-protection and dust filter masks. Those persons shall wear protective clothing, as necessary.

Ventilation
No special requirements.

Carriage
The bilge wells of the cargo spaces carrying this cargo shall be kept dry.

Discharge
No special requirements.

Clean-up
After discharge of this cargo, particular attention shall be given to bilge wells of the cargo spaces.

SAND, HEAVY MINERAL

Description
The cargo is generally a blend of two or more heavy mineral sands. Such sands are characterized by their heavy bulk density and relatively fine grain size. Abrasive. May be dusty.

Characteristics

Physical properties			
Size	**Angle of repose**	**Bulk density (kg/m^3)**	**Stowage factor (m^3/t)**
Up to 5 mm	Not applicable	2,380 to 3,225	0.31 to 0.42
Hazard classification			
Class	**Subsidiary hazard(s)**	**MHB**	**Group**
Not applicable	Not applicable	Not applicable	A

Hazard
This cargo may liquefy if shipped at a moisture content in excess of its transportable moisture limit (TML). See sections 7 and 8 of this Code.
This cargo is non-combustible or has a low fire risk.

Stowage and segregation
No special requirements.

Hold cleanliness
No special requirements.

Weather precautions
When a cargo is carried in a ship other than a ship complying with the requirements in 7.3.2 of this Code, the following provisions shall be complied with:

.1 the moisture content of the cargo shall be kept less than its TML during loading operations and the voyage;

.2 unless expressly provided otherwise in this individual schedule, the cargo shall not be handled during precipitation;

.3 unless expressly provided otherwise in this individual schedule, during handling of the cargo, all non-working hatches of the cargo spaces into which the cargo is loaded, or to be loaded, shall be closed;

.4 the cargo may be handled during precipitation under the conditions stated in the procedures required in 4.3.3 of this Code; and

.5 the cargo in a cargo space may be discharged during precipitation provided that the total amount of the cargo in the cargo space is to be discharged in the port.

Loading
Trim in accordance with the relevant provisions required under sections 4 and 5 of this Code. As the density of the cargo is extremely high, the tank top may be overstressed unless the cargo is evenly spread across the tank top to equalize the weight distribution. Due consideration shall be given to ensure that the tank top is not overstressed during the voyage and during loading by a pile of the cargo.

Precautions
Bilge wells shall be clean, dry and covered as appropriate, to prevent ingress of the cargo.

Ventilation
No special requirements.

Carriage
The appearance of the surface of this cargo shall be checked regularly during the voyage. If free water above the cargo or fluid state of the cargo is observed during the voyage, the master shall take appropriate actions to prevent cargo shifting and potential capsize of the ship, and give consideration to seeking emergency entry into a place of refuge.

Discharge
No special requirements.

Clean-up
No special requirements.

SAND, MINERAL CONCENTRATE, RADIOACTIVE MATERIAL, LOW SPECIFIC ACTIVITY (LSA-I) UN 2912

Description

This cargo is generally a concentrate stream resulting from the processing of heavy mineral sands. Such mineral sand concentrates are characterized by their heavy bulk density and relatively fine grain size. This schedule includes concentrates of sands containing natural or depleted uranium and thorium, including metals, mixtures and compounds.

Abrasive. May be dusty. This cargo is cohesive if moisture content is above 1%.

Characteristics

Physical properties			
Size	**Angle of repose**	**Bulk density (kg/m^3)**	**Stowage factor (m^3/t)**
Fine Particles up to 2 mm	Approximately 35°	2,200 to 3,225	0.31 to 0.45
Hazard classification			
Class	**Subsidiary hazard(s)**	**MHB**	**Group**
7	Not applicable	TX and CR	A and B

Hazard

This cargo may liquefy if shipped at a moisture content in excess of its transportable moisture limit (TML). See sections 7 and 8 of this Code.
Low radiotoxicity.
May cause long-term health effects and skin irritation.
Prolonged and repeated exposure to silica dust can result in respiratory disease.
This cargo is non-combustible or has a low fire risk.

Stowage and segregation

"Separated from" foodstuffs.

Hold cleanliness

Clean and dry as relevant to the hazards of the cargo.

Weather precautions

When a cargo is carried in a ship other than a ship complying with the requirements in 7.3.2 of this Code, the following provisions shall be complied with:

.1 the moisture content of the cargo shall be kept less than its TML during loading operations and the voyage;

.2 unless expressly provided otherwise in this individual schedule, the cargo shall not be handled during precipitation;

.3 unless expressly provided otherwise in this individual schedule, during handling of the cargo, all non-working hatches of the cargo spaces into which the cargo is loaded, or to be loaded, shall be closed;

.4 the cargo may be handled during precipitation under the conditions stated in the procedures required in 4.3.3 of this Code; and

.5 the cargo in a cargo space may be discharged during precipitation provided that the total amount of the cargo in the cargo space is to be discharged in the port.

Loading
Trim in accordance with the relevant provisions required under sections 4 and 5 of this Code. As the density of the cargo is extremely high, the tank top may be overstressed unless the cargo is evenly spread across the tank top to equalize the weight distribution. Due consideration shall be given to ensure that the tank top is not overstressed during the voyage and during loading by a pile of the cargo.

Precautions
Personnel shall not be unnecessarily exposed to dust of this cargo. Persons who may be exposed to the dust of the cargo shall wear protective clothing, goggles or other equivalent dust eye-protection and dust filter masks. There shall be no leakage outside the cargo space in which this cargo is stowed.

Ventilation
The cargo spaces carrying this cargo shall not be ventilated during voyage.

Carriage
All instructions provided by the shipper shall be followed for the carriage of this cargo. The appearance of the surface of this cargo shall be checked regularly during the voyage. If free water above the cargo or fluid state of the cargo is observed during the voyage, the master shall take appropriate actions to prevent cargo shifting and potential capsize of the ship, and give consideration to seeking emergency entry into a place of refuge.

Discharge
All instructions provided by the shipper shall be followed for the discharge of this cargo.

Clean-up
Cargo spaces used for this cargo shall not be used for other goods until decontaminated. Refer to 9.3.2.3 of this Code.

Emergency procedures

Special emergency equipment to be carried Protective clothing (gloves, boots, coveralls and headgear). Self-contained breathing apparatus.
Emergency procedures Wear protective clothing and self-contained breathing apparatus. **Emergency action in the event of fire** Batten down; use ship's fixed fire-fighting installation, if fitted. Use water spray to control spread of dust, if necessary. **Medical first aid** Refer to the *Medical First Aid Guide* (MFAG), as amended.

Remarks
Most materials are likely to be non-combustible. Speedily collect and isolate potentially contaminated equipment and cover. Seek expert advice.

SAWDUST

Description
Fine particles of wood.

Characteristics

Physical properties			
Size	**Angle of repose**	**Bulk density (kg/m^3)**	**Stowage factor (m^3/t)**
Not applicable	Not applicable	-	-
Hazard classification			
Class	**Subsidiary hazard(s)**	**MHB**	**Group**
Not applicable	Not applicable	CB	B

Hazard
Spontaneous combustion if not clean, dry and free from oil. Liable to cause oxygen depletion within the cargo space.

Stowage and segregation
Segregation as required for class 4.1 materials.
"Separated from" all class 5.1 liquids and all class 8 liquids.

Hold cleanliness
Clean and dry as relevant to the hazards of the cargo.

Weather precautions
This cargo shall be kept as dry as practicable. This cargo shall not be handled during precipitation. During handling of this cargo, all non-working hatches of the cargo spaces into which this cargo is loaded, or to be loaded, shall be closed.

Loading
Trim in accordance with the relevant provisions required under sections 4 and 5 of this Code.

Precautions
Bilge wells shall be clean, dry and covered as appropriate, to prevent ingress of the cargo. Prior to loading this cargo, the shipper shall provide the master with a certificate stating that the cargo is clean, dry and free from oil.

Ventilation
Surface ventilation only, either natural or mechanical, shall be conducted, as necessary, during the voyage for this cargo.

Carriage
No special requirements.

Discharge
No special requirements.

Clean-up
No special requirements.

Emergency procedures

Special emergency equipment to be carried Nil
Emergency procedures Nil **Emergency action in the event of fire** Batten down; use ship's fixed fire-fighting installation, if fitted. Exclusion of air may be sufficient to control fire. **Medical first aid** Refer to the *Medical First Aid Guide* (MFAG), as amended.

SCALE GENERATED FROM THE IRON AND STEEL MAKING PROCESS

Description
This cargo consists mainly of ferric oxide which is collected from various places of iron and steel making process. Mill scale, which is scale collected from water used in hot rolling process and from drainage pits with a small amount of oil which is used for rolling, is a main component of this cargo. This cargo is reused as a raw material for iron.
Shape varies from powder to lumps. Colour is grey, ash brown, ash black green, brown, burnt umber or black. Specific gravity of solids is 3 to 6.

This cargo consists mainly of moisture, oil (less than 1.2%), wustite (FeO), magnetite (Fe_3O_4), hematite (Fe_2O_3), metallic iron and fayalite (Fe_2SiO_4). The main chemical elements in this cargo except for moisture and oil are in the range of the followings: Fe > 70%, Ca <0.8%, Si < 0.7%, Al < 0.3%, Cr < 1.5%, Ni < 0.5%, Mn < 1.0%.

Characteristics

Physical properties			
Size	**Angle of repose**	**Bulk density (kg/m^3)**	**Stowage factor (m^3/t)**
Up to 150 mm	Not applicable	1,300 to 3,300	0.30 to 0.77
Hazard classification			
Class	**Subsidiary hazard(s)**	**MHB**	**Group**
Not applicable	Not applicable	Not applicable	A

Hazard
This cargo may liquefy if shipped at a moisture content in excess of its transportable moisture limit (TML). See sections 7 and 8 of this Code.
This cargo is non-combustible or has a low fire risk.

Stowage and segregation
No special requirements.

Hold cleanliness
No special requirements.

Weather precautions
When a cargo is carried in a ship other than a ship complying with the requirements in 7.3.2 of this Code, the following provisions shall be complied with:

.1 the moisture content of the cargo shall be kept less than its TML during loading operations and the voyage;

.2 unless expressly provided otherwise in this individual schedule, the cargo shall not be handled during precipitation;

.3 unless expressly provided otherwise in this individual schedule, during handling of the cargo, all non-working hatches of the cargo spaces into which the cargo is loaded, or to be loaded, shall be closed;

.4 the cargo may be handled during precipitation under the conditions stated in the procedures required in 4.3.3 of this Code; and

.5 the cargo in a cargo space may be discharged during precipitation provided that the total amount of the cargo in the cargo space is to be discharged in the port.

Loading
Trim in accordance with the relevant provisions required under sections 4 and 5 of this Code. When the stowage factor of this cargo is equal to or less than 0.56 m^3/t, the tank top may be overstressed unless the cargo is evenly spread across the tank top to equalize the weight distribution. Due consideration shall be given to ensure that the tank top is not overstressed during the voyage and during loading by a pile of the cargo.

Precautions
Persons who may be exposed to the dust of the cargo shall wear protective clothing, goggles or other equivalent dust eye-protection and dust filter masks, as necessary.
As this cargo may contain oil less than 1.2%, due consideration shall be given not to discharge bilge directly from the cargo holds.

Ventilation
No special requirements.

Carriage
The appearance of the surface of this cargo shall be checked regularly during the voyage. If free water above the cargo or fluid state of the cargo is observed during the voyage, the master shall take appropriate actions to prevent cargo shifting and potential capsize of the ship, and give consideration to seeking emergency entry into a place of refuge.

Discharge
No special requirements.

Clean-up
No special requirements.

SCRAP METAL
(see appendix to this schedule)

Description
"Scrap" iron or steel covers an enormous range of ferrous metals, principally intended for recycling.

Characteristics

Physical properties			
Size	**Angle of repose**	**Bulk density (kg/m^3)**	**Stowage factor (m^3/t)**
Various	Not applicable	Various	Various
Hazard classification			
Class	**Subsidiary hazard(s)**	**MHB**	**Group**
Not applicable	Not applicable	Not applicable	C

Hazard
No special hazards.
This cargo is non-combustible or has a low fire risk except when cargo contains swarf (fine metal turnings liable to spontaneous combustion) refer to the entry for FERROUS METAL BORINGS, SHAVINGS, TURNINGS or CUTTINGS UN 2793 in this Code.

Stowage and segregation
No special requirements.

Hold cleanliness
No special requirements.

Weather precautions
This cargo shall be kept as dry as practicable before loading, during loading and during voyage. This cargo shall not be loaded during precipitation. During loading of this cargo, all non-working hatches of the cargo spaces to which this cargo is loaded, or to be loaded, shall be closed.

Loading
Refer to the appendix to this schedule.

Precautions
Refer to the appendix to this schedule.

Ventilation
Surface ventilation only, either natural or mechanical, shall be conducted, as necessary, during the voyage for this cargo.

Carriage
Bilges in the cargo spaces carrying this cargo shall not be pumped unless absolutely necessary. Bilgewater of this cargo may contain a certain amount of dirt and oil from old machinery. *Refer to the appendix to this individual schedule.*

Discharge
When this cargo is discharged by magnet or spider grab:

.1 the deck and deck machineries shall be protected from falling cargo; and

.2 damages to the ship shall be checked, after the completion of discharge.

Clean-up

Prior to cleaning up the cargo spaces for this cargo, the crew shall be informed of danger due to broken glass and sharp edges. Prior to washing out the residues of this cargo, any oil spillages shall be cleaned from the tank tops and the bilge wells of the cargo spaces for this cargo.

APPENDIX

SCRAP METAL

Handling of this cargo varies from magnets to spider grabs, depending usually on the size of material. This cargo may include articles from the size of car bodies to fine metal turnings (swarf). The weight of individual pieces will also vary greatly, ranging from heavy machinery to tin cans.

Loading

Before loading, the cargo spaces shall be prepared as per general loading practice and any areas liable to be damaged by falling cargo shall be protected with dunnage. This includes decks and coamings in way of the material's path to the cargo spaces. Removing the ship's side rails may be advisable.

A layer of this cargo shall be carefully placed over the tank top in the square to cushion any fall out. Magnet and grab drivers shall be instructed not to release their loads too high above the pile.

The usual method of loading is to form a pile along the ship's centre line and use the slope to roll material into the ends and sides. Every effort must be made to work the wings and ends to evenly distribute the weight. If this is not done, the light high-volume pieces will roll to the wings and the small heavy pieces will concentrate in the square.

When pumping the bilge wells, the master shall be aware that a certain amount of dirt and oil can be expected from old machinery. Broken glass and sharp jagged edges may be present and care shall be taken by personnel working near scrap.

Before hatches are closed, the cargo spaces shall be checked that no sharp projections could pierce the ship's side.

SEED CAKE, containing vegetable oil UN 1386
(a) mechanically expelled seeds, containing more than 10% of oilor more than 20% of oil and moisture combined

The range of oil and moisture content is indicated in the figure.

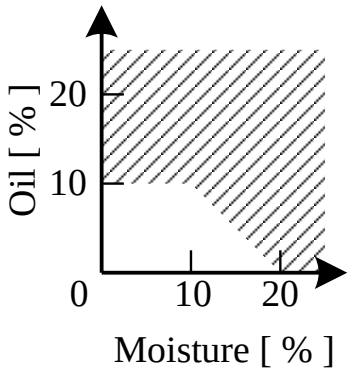

To be carried in bulk only with special permission from the competent authority.

Description
Residue remaining after oil has been expelled mechanically from oil-bearing seeds. The cereals and cereal products included in this schedule are those derived from:

Bakery materials
Barley malt pellets
Beet
Bran pellets
Brewer's grain pellets
Citrus pulp pellets
Coconut
Copra
Corn gluten
Cotton seed
Expellers
Gluten pellets
Ground nuts, meal
Hominy chop
Linseed
Maize
Meal, oily
Mill feed pellets
Niger seed, expellers
Oil cake
Palm kernel
Peanuts
Pellets, cereal
Pollard pellets
Rape seed
Rice bran
Rice broken
Safflower seed
Seed expellers, oily
Soya bean
Strussa pellets
Sunflower seed
Toasted meals

The above may be shipped in the form of pulp, meals, cake, pellets and expellers.

Characteristics

Physical properties			
Size	**Angle of repose**	**Bulk density (kg/m^3)**	**Stowage factor (m^3/t)**
Not applicable	Not applicable	478 to 719	1.39 to 2.09
Hazard classification			
Class	**Subsidiary hazard(s)**	**MHB**	**Group**
4.2	Not applicable		B

Hazard
May self-heat slowly and, if wet or containing an excessive proportion of unoxidized oil, ignite spontaneously. Liable to oxidize, causing subsequent reduction of oxygen in the cargo space. Carbon dioxide may be produced.

Stowage and segregation
See 9.3 of this Code.

Hold cleanliness
Clean and dry as relevant to the hazards of the cargo.

Weather precautions
This cargo shall be kept as dry as practicable. This cargo shall not be handled during precipitation. During handling of this cargo, all non-working hatches of the cargo spaces into which this cargo is loaded, or to be loaded, shall be closed.

Loading
Trim in accordance with the relevant provisions required under sections 4 and 5 of this Code.

Precautions
This cargo shall only be accepted for loading when the temperature of the cargo is not higher than ambient temperature plus 10°C or 55°C, whichever is lower. Before shipment, this cargo shall be properly aged; the duration of ageing required varies with the oil content. The competent authority may permit seed cakes described in this schedule to be carried under conditions governing SEED CAKE (b), when satisfied, as a result of tests, that such relaxation is justified (see following schedule). Certificates from the competent authority giving such permission shall state the oil content and moisture content. The temperature of this cargo shall be measured regularly at a number of depths in the cargo spaces and recorded during the voyage. If the temperature of the cargo reaches 55°C and continues to increase, ventilation to the cargo shall be stopped. If self-heating continues, then carbon dioxide or inert gas shall be introduced to the cargo space. Entry of personnel into cargo spaces for this cargo shall not be permitted until tests have been carried out and it has been established that the oxygen content has been restored to a normal level.*

Ventilation
The cargo spaces carrying this cargo shall not be mechanically ventilated during voyage to prevent self-heating of the cargo, except in case of emergency.

Carriage
Hatches of the cargo spaces carrying this cargo shall be weathertight to prevent the ingress of water.

Discharge
No special requirements.

Clean-up
No special requirements.

* Refer to *Revised recommendations for entering enclosed spaces aboard ships* (resolution A.1050(27)).

Emergency procedures

Special emergency equipment to be carried Self-contained breathing apparatus.
Emergency procedures Wear self-contained breathing apparatus. **Emergency action in the event of fire** Batten down; use ship's fixed fire-fighting installation, if fitted. **Medical first aid** Refer to the *Medical First Aid Guide* (MFAG), as amended.

SEED CAKE, containing vegetable oil UN 1386
(b) solvent extractions and expelled seeds, containing not more than 10% of oil and when the amount of moisture is higher than 10%, not more than 20% of oil and moisture combined

The provisions of this schedule do not apply to the following materials, due to those materials not meeting the criteria for class 4.2 materials:

.1 solvent-extracted rape seed meal, rape seed pellets, soya bean meal, cotton seed meal and sunflower seed meal, containing not more than 4% oil and 15% oil and moisture combined;

.2 mechanically expelled citrus pulp pellets containing not more than 2.5% oil and 14% oil and moisture combined;

.3 mechanically expelled corn gluten meal containing not more than 11% oil and 23.6% oil and moisture combined;

.4 mechanically expelled corn gluten feed pellets containing not more than 5.2% oil and 17.8% oil and moisture combined; and

.5 mechanically expelled beet pulp pellets containing not more than 2.8% oil and 15.0% oil and moisture combined.

A certificate from a person recognized by the competent authority of the country of shipment shall be provided by the shipper, prior to loading, stating that the oil and moisture content of the material is as specified above.

Note: This entry covers the following:

.1 all solvent-extracted and expelled seed cakes containing not more than 10% oil, and not more than 10% moisture; and

.2 all solvent-extracted and expelled seed cakes containing not more than 10% oil and moisture content higher than 10%, in which case the oil and moisture combined must not exceed 20%.

The range of oil and moisture content is indicated in the figure.

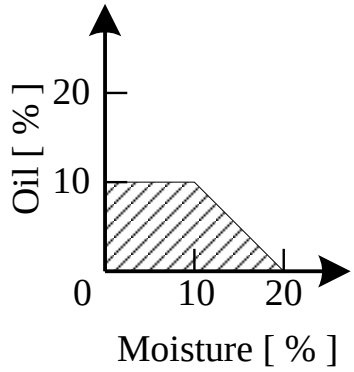

When, in solvent-extracted seed cake, the oil or oil and moisture content exceeds the percentages stated above, guidance shall be sought from the competent authorities.

Description
Residue remaining after oil has been extracted by a solvent process or expelled mechanically from oil-bearing seeds. The cereals and cereal products included in this schedule are those derived from:

Bakery materials
Barley malt pellets
Beet
Bran pellets
Brewer's grain pellets
Citrus pulp pellets
Coconut
Copra
Corn gluten
Cotton seed
Expellers
Gluten pellets
Ground nuts, meal
Hominy chop
Linseed
Maize
Meal, oily
Mill feed pellets
Niger seed, expellers
Oil cake
Palm kernel
Peanuts
Pellets, cereal
Pollard pellets
Rape seed
Rice bran
Rice broken
Safflower seed
Seed expellers, oily
Soya bean
Strussa pellets
Sunflower seed
Toasted meals

The above may be shipped in the form of pulp, meals, cake, pellets and expellers.

Characteristics

Physical properties			
Size	**Angle of repose**	**Bulk density (kg/m^3)**	**Stowage factor (m^3/t)**
Not applicable	Not applicable	478 to 719	1.39 to 2.09
Hazard classification			
Class	**Subsidiary hazard(s)**	**MHB**	**Group**
4.2	Not applicable		B

Hazard
May self-heat slowly and, if wet or containing an excessive proportion of unoxidized oil, ignite spontaneously. Liable to oxidize, causing subsequent reduction of oxygen in the cargo space. Carbon dioxide may also be produced.

Stowage and segregation
See 9.3 of this Code.
If the bulkhead between the cargo space and the engine-room is not insulated to class "A-60" standard, solvent extraction seed shall be stowed "away from" the bulkhead.

Hold cleanliness
Clean and dry as relevant to the hazards of the cargo.

Weather precautions
This cargo shall be kept as dry as practicable. This cargo shall not be handled during precipitation. During handling of this cargo, all non-working hatches of the cargo spaces into which this cargo is loaded, or to be loaded, shall be closed.

Loading
This cargo shall only be accepted for loading when the cargo is substantially free from flammable solvent and a certificate from a person recognized by the competent authority of the country of shipment specifying the oil content and moisture content is issued.
Trim in accordance with the relevant provisions required under sections 4 and 5 of this Code.

Precautions
Before shipment, this cargo shall be properly aged; the duration of ageing required varies with the oil content. The temperature of this cargo shall be measured regularly at a number of depths in the cargo spaces and recorded during the voyage. If the temperature of the cargo reaches 55°C and continues to increase, ventilation to the cargo shall be stopped. If self-heating continues, then carbon dioxide or inert gas shall be introduced to the cargo space. Notwithstanding the previous requirement, in the case of solvent-extracted seed cakes the use of carbon dioxide or inert gas shall be withheld until fire is apparent. Entry of personnel into cargo spaces for this cargo shall not be permitted until tests have been carried out and it has been established that the oxygen content has been restored to a normal level.* When the planned interval between the commencement of loading and the completion of discharge of this cargo exceeds 5 days, the cargo shall not be accepted for loading unless the cargo is to be carried in a cargo space equipped with facilities for introducing carbon dioxide or inert gas into the space. Smoking and the use of naked lights shall be prohibited in the vicinity of the cargo space during loading and unloading and on entry into the cargo spaces at any other time. Electrical circuits for equipment in cargo spaces which is unsuitable for use in an explosive atmosphere shall be isolated by removal of links in the system other than fuses. Spark-arresting screens shall be fitted to ventilators to the cargo spaces containing this cargo.

Ventilation
Surface ventilation, either natural or mechanical, shall be conducted, as necessary, for removing any residual solvent vapour. To prevent self-heating of the cargo, caution is required when using mechanical ventilation.

Carriage
Hatches of the cargo spaces carrying this cargo shall be weathertight to prevent the ingress of water.

Discharge
No special requirements.

Clean-up
No special requirements.

* Refer to the *Revised recommendations for entering enclosed spaces aboard ships* (resolution A.1050(27)).

Emergency procedures

Special emergency equipment to be carried Self-contained breathing apparatus.
Emergency procedures Wear self-contained breathing apparatus. **Emergency action in the event of fire** Batten down; use ship's fixed fire-fighting installation, if fitted. **Medical first aid** Refer to the *Medical First Aid Guide* (MFAG), as amended.

Remarks

The use of CO_2 is limited to controlling the fire and further amounts may need to be injected from time to time during the sea passage to reduce the oxygen content in the hold. On arrival in port, the cargo will need to be dug out to reach the seat of the fire.

SEED CAKE UN 2217
with not more than 1.5% oil and not more than 11% moisture

The provisions of this schedule do not apply to the following materials, due to those materials not meeting the criteria for class 4.2 materials: solvent-extracted rape seed meal, rape seed pellets, soya bean meal, cotton seed meal and sunflower seed meal containing not more than 1.5% oil and not more than 11% moisture. A certificate from a person recognized by the competent authority of the country of shipment shall be provided by the shipper, prior to loading, stating that the oil and moisture content of the material is as specified above.

The range of oil and moisture content is indicated in the figure.

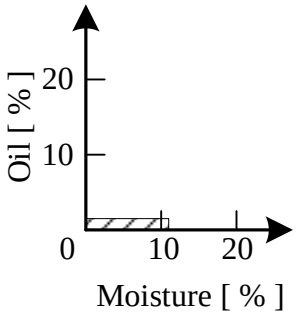

Description
Residue remaining after oil has been extracted by a solvent process from oil-bearing seeds. The cereals and cereal products included in this schedule are those derived from:

Bakery materials
Barley malt pellets
Beet
Bran pellets
Brewer's grain pellets
Citrus pulp pellets
Coconut
Copra
Corn gluten
Cotton seed
Expellers
Gluten pellets
Ground nuts, meal
Hominy chop
Linseed
Maize
Meal, oily
Mill feed pellets
Niger seed, expellers
Oil cake
Palm kernel
Peanuts
Pellets, cereal
Pollard pellets
Rape seed
Rice bran
Rice broken
Safflower seed
Seed expellers, oily
Soyabean
Strussa pellets
Sunflower seed

The above may be shipped in the form of pulp, meals, cake, pellets, expellers.

Characteristics

Physical properties			
Size	**Angle of repose**	**Bulk density (kg/m^3)**	**Stowage factor (m^3/t)**
0.1 mm to 5 mm	Not applicable	478 to 719	1.39 to 2.09
Hazard classification			
Class	**Subsidiary hazard(s)**	**MHB**	**Group**
4.2	Not applicable		B

Hazard
May self-heat slowly and, if wet or containing an excessive proportion of unoxidized oil, ignite spontaneously. Liable to oxidize, causing subsequent reduction of oxygen in the cargo space. Carbon dioxide may also be produced.

Stowage and segregation
See 9.3 of this Code.
If the bulkhead between the cargo space and the engine-room is not insulated to class "A-60" standard, this cargo shall be stowed "away from" the bulkhead.

Hold cleanliness
Clean and dry as relevant to the hazards of the cargo.

Weather precautions
This cargo shall be kept as dry as practicable. This cargo shall not be handled during precipitation. During handling of this cargo, all non-working hatches of the cargo spaces into which this cargo is loaded or to be loaded shall be closed.

Loading
This cargo shall only be accepted for loading when the cargo is substantially free from flammable solvent and a certificate from a person recognized by the competent authority of the country of shipment specifying the oil content and moisture content is issued.
Trim in accordance with the relevant provisions required under sections 4 and 5 of this Code.

Precautions
The temperature of this cargo shall be measured regularly at a number of depths in the cargo spaces and recorded during the voyage. If the temperature of the cargo reaches 55°C and continues to increase, ventilation to the cargo shall be stopped. If self-heating continues, then carbon dioxide or inert gas shall be introduced to the cargo space. Notwithstanding the previous requirement, the use of carbon dioxide or inert gas shall be withheld until fire is apparent. Entry of personnel into cargo spaces for this cargo shall not be permitted until tests have been carried out and it has been established that the oxygen content has been restored to a normal level.* When the planned interval between the commencement of loading and the completion of discharge of this cargo exceeds 5 days, the cargo shall not be accepted for loading unless the cargo is to be carried in a cargo space equipped with facilities for introducing carbon dioxide or inert gas into the space. Smoking and the use of naked lights shall be prohibited in the vicinity of the cargo space during loading and unloading and on entry into the cargo spaces at any other time. Electrical circuits for equipment in cargo spaces which is unsuitable for use in an explosive atmosphere, shall be isolated by removal of links in the system other than fuses. Spark-arresting screens shall be fitted to ventilators to the cargo spaces containing this cargo.

Ventilation
Surface ventilation, either natural or mechanical, shall be conducted, as necessary, for removing any residual solvent vapour. To prevent self-heating of the cargo, caution is required when using mechanical ventilation.

Carriage
Hatches of the cargo spaces carrying this cargo shall be weathertight to prevent the ingress of water.

* Refer to *Revised recommendations for entering enclosed spaces aboard ships* (resolution A.1050(27)).

Discharge
No special requirements.

Clean-up
No special requirements.

Emergency procedures

Special emergency equipment to be carried Self-contained breathing apparatus.
Emergency procedures Wear self-contained breathing apparatus. **Emergency action in the event of fire** Batten down; use ship's fixed fire-fighting installation, if fitted. **Medical first aid** Refer to the *Medical First Aid Guide* (MFAG), as amended.

Remarks
The use of CO_2 is limited to controlling the fire, and further amounts may need to be injected from time to time during passage to reduce the oxygen content in the hold. On arrival in port, the cargo will need to be dug out to reach the seat of the fire.

SEED CAKES AND OTHER RESIDUES OF PROCESSED OILY VEGETABLES

This schedule shall only apply to seed cakes and other residues of processed oily vegetables which are substantially free from flammable solvents or other flammable chemicals, meet the criterion for self-heating solids specified in 9.2.3.3 and do not meet any of the criteria for dangerous goods specified in 9.2.2.

Description

Residues remaining after oil has been mechanically expelled or extracted by solvent or other chemical processes from oil-bearing seeds, grains, cereals, fruit or vegetables. This cargo may be shipped in the form of pulp, meals, cake, pellets and expellers.

Characteristics

Physical properties			
Size	**Angle of repose**	**Bulk density (kg/m^3)**	**Stowage factor (m^3/t)**
Various	Various*	478 to 719	1.39 to 2.09
Hazard classification			
Class	**Subsidiary hazard(s)**	**MHB**	**Group**
Not applicable	Not applicable	SH	B

* Some cargoes in pelletized form may be non-cohesive. See 5.4 of this Code.

Hazard

This cargo may heat spontaneously. Liable to oxidize, causing subsequent reduction of oxygen in the cargo space. Carbon dioxide may also be produced.

Loading of dry pellets using cargo blowers may present a risk of dust explosion.

Stowage and segregation

Unless otherwise determined by the competent authority, segregation as required for class 4.2 materials.

Hold cleanliness

Clean and dry as relevant to the hazards of the cargo.

Weather precautions

This cargo shall be kept as dry as practicable. This cargo shall not be handled during precipitation. During handling of this cargo, all non-working hatches of the cargo spaces into which this cargo is loaded, or to be loaded, shall be closed.

Loading

Trim in accordance with the relevant provisions required under sections 4 and 5 of this Code. Solvent-extracted cargo shall only be accepted for loading when the cargo is substantially free from flammable solvent. Before shipment, solvent-extracted cargoes shall be properly aged; the duration of ageing required varies with the oil content.

This cargo shall only be accepted for loading when the temperature of the cargo is not higher than the ambient temperature plus 10°C, or 55°C, whichever is lower. All sources of ignition shall be considered and avoided to prevent possible dust explosions. Blower equipment shall be earthed. Piping shall be electrically continuous or earthed.

Precautions
Entry of personnel into cargo spaces for this cargo shall not be permitted until tests have been carried out and it has been established that the oxygen content has been restored to a normal level.*

Persons who may be exposed to the dust of the cargo shall wear a dust filter masks, protective eyewear and protective clothing, as necessary.

The temperature of this cargo shall be measured regularly at a number of depths in the cargo spaces and recorded during the voyage. If the temperature of the cargo reaches 55°C and continues to increase, ventilation for the cargo shall be stopped.

If self-heating continues, then carbon dioxide or inert gas shall be introduced into the cargo space. Notwithstanding the previous requirement, in the case of solvent-extracted cargoes, the use of carbon dioxide or inert gas shall be withheld until fire is apparent.

Electrical circuits for equipment in cargo spaces which are unsuitable for use in an explosive atmosphere shall be isolated by removal of links in the system other than fuses.

Spark-arresting screens shall be fitted to ventilators to the cargo spaces containing this cargo.

Ventilation
Surface ventilation either natural or mechanical shall be conducted, as necessary, for removing any residual solvent vapour. To prevent self-heating of the cargo, caution is required when using mechanical ventilation.

Carriage
Hatches of the cargo spaces carrying this cargo shall be weathertight to prevent the ingress of water.

Discharge
No special requirements.

Clean-up
No special requirements.

Emergency procedures

Special emergency equipment to be carried Self-contained breathing apparatus.
Emergency procedures Wear self-contained breathing apparatus. **Emergency action in the event of fire** Batten down; use ship's fixed CO_2 fire-fighting installation, if fitted. **Medical first aid** Refer to the *Medical First Aid Guide* (MFAG), as amended.

* Refer to *Revised recommendations for entering enclosed spaces aboard ships* (resolution A.1050(27)).

Remarks

The use of CO_2 or inert gas is limited to controlling the fire, and further amounts may need to be injected from time to time during passage to reduce the oxygen content in the hold. On arrival in port, the cargo will need to be removed in stages to reach the seat of the fire.

SEED CAKES AND OTHER RESIDUES OF PROCESSED OILY VEGETABLES

This schedule shall only apply to seed cakes and other residues of processed oily vegetables which are substantially free from flammable solvents or other flammable chemicals and do not meet any of the criteria on dangerous goods or materials hazardous only in bulk specified in 9.2.2 or 9.2.3, respectively.

Description

Residues remaining after oil has been mechanically expelled or extracted by solvent or other chemical processes from oil-bearing seeds, grains, cereals, fruit or vegetables. This cargo may be shipped in the form of pulp, meals, cake, pellets and expellers.

Characteristics

Physical properties			
Size	**Angle of repose**	**Bulk density (kg/m^3)**	**Stowage factor (m^3/t)**
Various	Various*	478 to 719	1.39 to 2.09
Hazard classification			
Class	**Subsidiary hazard(s)**	**MHB**	**Group**
Not applicable	Not applicable	Not applicable	C

* Some cargoes in pelletized form may be non-cohesive. See 5.4 of this Code.

Hazard

Liable to oxidize, causing subsequent reduction of oxygen in the cargo space.
Loading of dry pellets using cargo blowers may present a risk of dust explosion.
This cargo is non-combustible or has a low fire risk.

Stowage and segregation

No special requirements.

Hold cleanliness

Clean and dry as relevant to the hazards of the cargo.

Weather precautions

This cargo shall be kept as dry as practicable. This cargo shall not be handled during precipitation. During handling of this cargo, all non-working hatches of the cargo spaces into which this cargo is loaded, or to be loaded, shall be closed.

Loading

Trim in accordance with the relevant provisions required under sections 4 and 5 of this Code.

In the case of seed cakes, a certificate from a person recognized by the competent authority of the country of shipment shall be provided by the shipper, prior to loading, stating that the requirements for exclusion from either the schedule for SEED CAKE UN 1386 (b) or UN 2217, whichever is applicable, are met as set out in those schedules and that the material does not meet the MHB (SH) criteria specified in 9.2.3.3.

Solvent-extracted cargo shall only be accepted for loading when the cargo is substantially free from flammable solvent. Before shipment, solvent-extracted cargoes shall be properly aged; the duration of ageing required varies with the oil content.

Precautions
Entry of personnel into cargo spaces for this cargo shall not be permitted until tests have been carried out and it has been established that the oxygen content has been restored to a normal level.*

Persons who may be exposed to the dust of the cargo shall wear a dust filter masks, protective eyewear and protective clothing, as necessary.

Ventilation
No special requirements.

Carriage
Hatches of the cargo spaces carrying this cargo shall be weathertight to prevent the ingress of water.

Discharge
No special requirements.

Clean-up
No special requirements.

* Refer to *Revised recommendations for entering enclosed spaces aboard ships* (resolution A.1050(27)).

SILICOMANGANESE (carbo-thermic)

Description
This material is a result of a carbo-thermic reduction process. A ferroalloy comprising principally manganese and silicon, mainly used as a deoxidizer and alloying element in the steel-making process. Particles or lumps of metallic-silver to dark-grey colour metal.

Characteristics

Physical properties			
Size	**Angle of repose**	**Bulk density (kg/m^3)**	**Stowage factor (m^3/t)**
Fines up to 80 mm	Not applicable	3,100 to 4,000	0.25 to 0.32
Hazard classification			
Class	**Subsidiary hazard(s)**	**MHB**	**Group**
Not applicable	Not applicable	Not applicable	C

Hazard
No special hazards.
This cargo is non-combustible or has a low fire risk.

Stowage and segregation
"Separated from" acids, alkalis, oxidizing and reducing agents and foodstuffs.

Hold cleanliness
No special requirements.

Weather precautions
No special requirements.

Loading
Trim in accordance with the relevant provisions required under sections 4 and 5 of this Code. As the density of the cargo is extremely high, the tank top may be overstressed unless the cargo is evenly spread across the tank top to equalize the weight distribution. Due consideration shall be given to ensure that the tank top is not overstressed during the voyage and during loading by a pile of the cargo.

Precautions
No special requirements.

Ventilation
No special requirements.

Carriage
No special requirements.

Discharge
No special requirements.

Clean-up
No special requirements.

SILICOMANGANESE (low carbon)

Description
A ferroalloy comprising principally manganese and silicon, mainly used as a deoxidizer and alloying element in the steel-making process. Particle or lump of blackish brown, silver white metal.

Characteristics

Physical properties			
Size	**Angle of repose**	**Bulk density (kg/m^3)**	**Stowage factor (m^3/t)**
10 mm to 150 mm	Not applicable	3,000 to 3,300	0.30 to 0.33
Hazard classification			
Class	**Subsidiary hazard(s)**	**MHB**	**Group**
Not applicable	Not applicable	WF and/or WT and/or TX	B

Hazard
This cargo is non-combustible and has a low fire risk. However, in contact with water, this cargo may evolve hydrogen, a flammable gas that may form explosive mixtures with air and may, under similar conditions, produce phosphine and arsine which are highly toxic gases. This cargo is liable to reduce oxygen content in a cargo space. May cause long-term health effects.

Stowage and segregation
Segregation as required for class 4.3 materials.
"Separated from" foodstuffs and all class 8 liquids.

Hold cleanliness
Clean and dry as relevant to the hazards of the cargo.

Weather precautions
This cargo shall be kept as dry as practicable before loading, during loading and during voyage. This cargo shall not be loaded during precipitation. During loading of this cargo, all non-working hatches of the cargo spaces to which this cargo is loaded, or to be loaded, shall be closed.

Loading
Trim in accordance with the relevant provisions required under sections 4 and 5 of this Code.

As the density of the cargo is extremely high, the tank top may be overstressed unless the cargo is evenly spread across the tank top to equalize the weight distribution. Due consideration shall be given to ensure that the tank top is not overstressed during the voyage and during loading by a pile of the cargo.

Precautions
The manufacturer or the shipper shall provide the master with a certificate stating that, after manufacture, the cargo was stored under cover, but exposed to open air for not less than three days prior to shipment.

Smoking shall not be allowed on deck and in the cargo spaces and "NO SMOKING" signs shall be displayed on deck whenever this cargo is on board. Electrical fittings and cables shall be in good condition and properly safeguarded against short circuits and sparking. Where a bulkhead is required to be suitable for segregation purposes, cable and conduit penetrations of the decks and bulkheads shall be sealed against the passage of gas and vapour. Whenever

practicable, ventilation systems for the living quarters shall be shut down or screened and air condition systems shall be placed on recirculation during loading and discharge of this cargo, in order to minimize the entry of dust into living quarters or other interior spaces of the ship. Precautions shall be taken to minimize the extent to which dust of this cargo may come in contact with moving parts of deck machinery and external navigation aids such as navigation lights.

Entry of personnel into enclosed spaces shall not be permitted until tests have been carried out and it has been established that the oxygen content has been restored to a normal level throughout the space and that no toxic gas is present, unless adequate ventilation and air circulation throughout the free space above the material has been effected.*

Ventilation
Mechanical surface ventilation shall be conducted during the voyage, as necessary, for the cargo spaces carrying this cargo.

Carriage
For quantitative measurements of oxygen and flammable gases liable to be evolved by the cargo, a suitable detector for each gas or combination of gases shall be on board while this cargo is carried. The detector shall be suitable for use in an atmosphere without oxygen and of certified safe type for use in explosive atmosphere. The concentrations of these gases in the cargo spaces carrying this cargo shall be measured regularly, during voyage, and the results of the measurements shall be recorded and kept on board.

Discharge
No special requirements.

Clean-up
No special requirements.

Emergency procedures

Special emergency equipment to be carried Self-contained breathing apparatus.
Emergency procedures Wear self-contained breathing apparatus. **Emergency action in the event of fire** Batten down and use CO_2, if available. **Do not use water.** **Medical first aid** Refer to the *Medical First Aid Guide* (MFAG), as amended.

Remarks
Material is virtually non-combustible when dry.

* Refer to *Revised recommendations for entering enclosed spaces aboard ships* (resolution A.1050(27)).

SILICON SLAG

Description
Silicon slag is an odourless greyish metallic material mainly in lump. It is composed of silicon and silicon dioxide in variable proportions.

Characteristics

Physical properties			
Size	**Angle of repose**	**Bulk density (kg/m^3)**	**Stowage factor (m^3/t)**
Up to 150 mm	Not applicable	1,500 to 3,000	0.33 to 0.67
Hazard classification			
Class	**Subsidiary hazard(s)**	**MHB**	**Group**
Not applicable	Not applicable	Not applicable	C

Hazard
The dust may cause irritation of eyes, skin and upper respiratory tract.
This cargo is non-combustible or has a low fire risk.

Stowage and segregation
"Separated from" acids or base materials.

Hold cleanliness
No special requirements.

Weather precautions
No special requirements.

Loading
Trim in accordance with the relevant provisions required under sections 4 and 5 of this Code.

When the stowage factor of this cargo is equal to or less than 0.56 m^3/t, the tank top may be overstressed unless the cargo is evenly spread across the tank top to equalize the weight distribution. Due consideration shall be given to ensure that the tank top is not overstressed during the voyage and during loading by a pile of the cargo.

Precautions
Persons who may be exposed to the dust of the cargo shall wear protective clothing, goggles or other equivalent dust eye-protection and dust filter masks, as necessary.

Ventilation
No special requirements.

Carriage
No special requirements.

Discharge
No special requirements.

Clean-up
No special requirements.

SODA ASH
(dense and light)

Description
Powdery; composed of white, odourless grains and dust. It is made by the combustion of salt and limestone. Soluble in water. Soda ash is ruined on contact with oil.

Characteristics

Physical properties			
Size	**Angle of repose**	**Bulk density (kg/m^3)**	**Stowage factor (m^3/t)**
Powdery	Not applicable	599 to 1,053	0.95 to 1.67
Hazard classification			
Class	**Subsidiary hazard(s)**	**MHB**	**Group**
Not applicable	Not applicable	Not applicable	C

Hazard
No special hazards.
This cargo is non-combustible or has a low fire risk.

Stowage and segregation
No special requirements.

Hold cleanliness
No special requirements.

Weather precautions
This cargo shall be kept as dry as practicable. This cargo shall not be handled during precipitation. During handling of this cargo, all non-working hatches of the cargo spaces into which this cargo is loaded, or to be loaded, shall be closed.

Loading
Trim in accordance with the relevant provisions required under sections 4 and 5 of this Code.

Precautions
Appropriate precautions shall be taken to protect machinery and accommodation spaces from the dust of the cargo. Bilge wells of the cargo spaces shall be protected from ingress of the cargo. Due consideration shall be given to protect equipment from the dust of the cargo. Persons who may be exposed to the dust of the cargo shall wear protective clothing, goggles or other equivalent dust eye-protection and dust filter masks, as necessary.

Ventilation
No special requirements.

Carriage
No special requirements.

Discharge
No special requirements.

Clean-up
After discharge of this cargo, the cargo spaces shall be swept clean except in cases where the cargo to be loaded subsequent to discharge is SODA ASH. The residues of this cargo may be pumped as slurry during washing out.

SODIUM NITRATE UN 1498

Description
Colourless, transparent, odourless crystals. Hygroscopic and soluble in water.

Characteristics

Physical properties			
Size	**Angle of repose**	**Bulk density (kg/m^3)**	**Stowage factor (m^3/t)**
Not applicable	Not applicable	508 to 719	1.39 to 1.97
Hazard classification			
Class	**Subsidiary hazard(s)**	**MHB**	**Group**
5.1	Not applicable		B

Hazard
Although non-combustible, mixtures with combustible material are readily ignited and may burn fiercely.
This cargo is hygroscopic and will cake if wet.

Stowage and segregation
"Separated from" foodstuffs.

Hold cleanliness
Clean and dry as relevant to the hazards of the cargo.

Weather precautions
This cargo shall be kept as dry as practicable. This cargo shall not be handled during precipitation. During handling of this cargo, all non-working hatches of the cargo spaces into which this cargo is loaded, or to be loaded, shall be closed.

Loading
Trim in accordance with the relevant provisions required under sections 4 and 5 of this Code.

Precautions
Bilge wells shall be clean, dry and covered as appropriate, to prevent ingress of the cargo. The master and officers are to note that the ship's fixed gas fire-fighting installation will be ineffective on fires involving this cargo and that applying copious amounts of water may be necessary.

Ventilation
The cargo spaces carrying this cargo shall not be ventilated during voyage.

Carriage
No special requirements.

Discharge
Sodium nitrate is hygroscopic and may cake in overhangs, impairing safety during discharge. If this cargo has hardened, it shall be trimmed to avoid the formation of overhangs, as necessary.

Clean-up
No special requirements.

Emergency procedures

Special emergency equipment to be carried Protective clothing (gloves, boots, coveralls and headgear). Self-contained breathing apparatus. Spray nozzles.
Emergency procedures Wear protective clothing and self-contained breathing apparatus. **Emergency action in the event of fire** Use copious quantities of water, which is best applied in the form of a spray to avoid disturbing the surface of the material. The material may fuse or melt, in which condition application may result in extensive scattering of the molten material. Exclusion of air or the use of CO_2 will not control the fire. Due consideration should be given to the effect on the stability of the ship due to accumulated water. **Medical first aid** Refer to the *Medical First Aid Guide* (MFAG), as amended.

Remarks
This material is non-combustible unless contaminated.

SODIUM NITRATE AND POTASSIUM NITRATE MIXTURE UN 1499

Description
A hygroscopic mixture, soluble in water.

Characteristics

Physical properties			
Size	**Angle of repose**	**Bulk density (kg/m^3)**	**Stowage factor (m^3/t)**
Not applicable	30°	1,136	0.88
Hazard classification			
Class	**Subsidiary hazard(s)**	**MHB**	**Group**
5.1	Not applicable		B

Hazard
Although non-combustible, mixtures with combustible material may readily ignite and burn fiercely.
This cargo is hygroscopic and will cake if wet.

Stowage and segregation
"Separated from" foodstuffs.

Hold cleanliness
Clean and dry as relevant to the hazards of the cargo.

Weather precautions
This cargo shall be kept as dry as practicable. This cargo shall not be handled during precipitation. During handling of this cargo, all non-working hatches of the cargo spaces into which this cargo is loaded, or to be loaded, shall be closed.

Loading
Trim in accordance with the relevant provisions required under sections 4 and 5 of this Code.

Precautions
Due consideration shall be given to prevent contact of the cargo and combustible materials.
Bilge wells shall be clean, dry and covered as appropriate, to prevent ingress of the cargo.
The master and officers are to note that the ship's fixed gas fire-fighting installation will be ineffective on fires involving this cargo and that applying copious amounts of water may be necessary.

Ventilation
The cargo spaces carrying this cargo shall not be ventilated during voyage.

Carriage
No special requirements.

Discharge
Sodium nitrate and potassium nitrate mixture is hygroscopic and may cake in overhangs, impairing safety during discharge. If this cargo has hardened, it shall be trimmed to avoid the formation of overhangs, as necessary.

Clean-up
No special requirements.

Emergency procedures

Special emergency equipment to be carried Protective clothing (gloves, boots, coveralls and headgear). Self-contained breathing apparatus. Spray nozzles.
Emergency procedures Wear protective clothing and self-contained breathing apparatus. **Emergency action in the event of fire** Use copious quantities of water, which is best applied in the form of a spray to avoid disturbing the surface of the material. The material may fuse or melt, in which condition application of water may result in extensive scattering of the molten materials. Exclusion of air or the use of CO_2 will not control the fire. Due consideration should be given to the effect on the stability of the ship due to the accumulated water. **Medical first aid** Refer to the *Medical First Aid Guide* (MFAG), as amended.

Remarks
Material is non-combustible unless contaminated.

SOLIDIFIED FUELS RECYCLED FROM PAPER AND PLASTICS

This schedule shall not apply to material classified as dangerous goods (class 4.2).

Description
Solidified fuels comprising papers and plastics by compressing or extruding in moulds. The main raw materials of this cargo are waste paper and plastic. Moisture content is 5% or less. Ash content is 10% or less. Total chlorine is 0.3% or less.

Characteristics

Physical properties			
Size	**Angle of repose**	**Bulk density (kg/m^3)**	**Stowage factor (m^3/t)**
Length: 30 mm to 100 mm Diameter: 15 mm to 30 mm	Not applicable	400 to 500	2.00 to 2.50
Hazard classification			
Class	**Subsidiary hazard(s)**	**MHB**	**Group**
Not applicable	Not applicable	SH	B

Hazard
Spontaneous ignition is not liable to occur up to 200°C. When ignited, it burns violently. When melted, it generates flammable and toxic gases. Spontaneous-heating may take place and may deplete oxygen in the cargo spaces.

Stowage and segregation
No special requirements.

Hold cleanliness
No special requirements.

Weather precautions
No special requirements.

Loading
Prior to loading, the manufacturer or shipper shall give the master a certificate stating that the cargo is not class 4.2. Trim in accordance with the relevant provisions required under sections 4 and 5 of this Code.

Precautions
During handling and carriage, no hot work, burning and smoking shall be permitted in the vicinity of the cargo spaces containing this cargo. After discharging this cargo, entry into cargo spaces shall not be permitted unless they have been sufficiently ventilated.*

Ventilation
The hatches of the cargo spaces shall be closed and the spaces shall not be ventilated during voyage.

Carriage
Entry into the cargo spaces shall not be permitted during voyage.

* Refer to *Revised recommendations for entering enclosed spaces aboard ships* (resolution A.1050(27)).

Discharge
The hatches of the cargo spaces shall be opened and sufficiently ventilated prior to entry.

Clean-up
No special requirements.

Emergency procedures

Special emergency equipment to be carried Protective clothing (protective glasses, heat-resistant gloves and coveralls).
Emergency procedures Wear protective clothing. **Emergency action in the event of fire** Batten down; use ship's fixed fire-fighting installation, if fitted. Extinguish fire with water, foam or dry chemicals. **Medical first aid** Refer to the *Medical First Aid Guide* (MFAG), as amended.

SPODUMENE (UPGRADED)

Description
Spodumene (upgraded) is an odourless and tasteless off-white to beige sand containing a mixture of naturally occurring silicates and quartz. It is produced by processing naturally occurring spodumene.

Characteristics

Physical properties			
Size	**Angle of repose**	**Bulk density (kg/m^3)**	**Stowage factor (m^3/t)**
Up to 8 mm	30° to 40°	1,600 to 2,000	0.50 to 0.63
Hazard classification			
Class	**Subsidiary hazard(s)**	**MHB**	**Group**
Not applicable	Not applicable	Not applicable	A

Hazard
This cargo may liquefy if shipped at a moisture content in excess of its transportable moisture limit (TML). See sections 7 and 8 of this Code.
This cargo is non-combustible or has a low fire risk.

Stowage and segregation
No special requirements.

Hold cleanliness
Clean and dry as relevant to the hazards of the cargo.

Weather precautions
When this cargo is carried in a ship other than a ship complying with the requirements in 7.3.2 of this Code, the following provisions shall be complied with:

.1 the moisture content of the cargo shall be kept less than its TML during loading operations and the voyage;

.2 unless expressly provided otherwise in this individual schedule, the cargo shall not be handled during precipitation;

.3 unless expressly provided otherwise in this individual schedule, during handling of the cargo, all non-working hatches of the cargo spaces into which the cargo is loaded, or to be loaded, shall be closed;

.4 the cargo may be handled during precipitation under the conditions stated in the procedures required in 4.3.3 of this Code; and

.5 the cargo in a cargo space may be discharged during precipitation provided that the total amount of the cargo in the cargo space is to be discharged in the port.

Loading
Trim in accordance with the relevant provisions required under sections 4 and 5 of this Code.

When the stowage factor of this cargo is equal to or less than 0.56 m^3/t, the tank top may be overstressed unless the cargo is evenly spread across the tank top to equalize the weight

distribution. Due consideration shall be given to ensure that the tank top is not overstressed during the voyage and during loading by a pile of the cargo.

Precautions
Bilge wells shall be clean, dry and covered as appropriate, to prevent ingress of the cargo. The bilge system of a cargo space to which this cargo is to be loaded shall be tested to ensure it is working.

Ventilation
No special requirements.

Carriage
The appearance of the surface of this cargo shall be checked regularly during the voyage. If free water above the cargo or fluid state of the cargo is observed during the voyage, the master shall take appropriate actions to prevent cargo shifting and potential capsize of the ship, and give consideration to seeking emergency entry into a place of refuge.

Discharge
No special requirements.

Clean-up
No special requirements.

STAINLESS STEEL GRINDING DUST

Description
Brown lumps: Moisture content 1% to 3%. May give off dust.

Characteristics

Physical properties			
Size	**Angle of repose**	**Bulk density (kg/m^3)**	**Stowage factor (m^3/t)**
Lumps: 75 mm to 380 mm	Not applicable	2,381	0.42
Hazard classification			
Class	**Subsidiary hazard(s)**	**MHB**	**Group**
Not applicable	Not applicable	Not applicable	C

Hazard
No special hazards.
This cargo is non-combustible or has a low fire risk.

Stowage and segregation
No special requirements.

Hold cleanliness
No special requirements.

Weather precautions
No special requirements.

Loading
Trim in accordance with the relevant provisions required under sections 4 and 5 of this Code.

As the density of the cargo is extremely high, the tank top may be overstressed unless the cargo is evenly spread across the tank top to equalize the weight distribution. Due consideration shall be given to ensure that the tank top is not overstressed during the voyage and during loading by a pile of the cargo.

Precautions
Appropriate precautions shall be taken to protect machinery and accommodation spaces from the dust of the cargo. Bilge wells of the cargo spaces shall be protected from ingress of the cargo. Due consideration shall be given to protect equipment from the dust of the cargo. Persons who may be exposed to the dust of the cargo shall wear protective clothing, goggles or other equivalent dust eye-protection and dust filter masks, as necessary.

Ventilation
No special requirements.

Carriage
No special requirements.

Discharge
No special requirements.

Clean-up
No special requirements.

STONE CHIPPINGS

Characteristics

Physical properties			
Size	**Angle of repose**	**Bulk density (kg/m^3)**	**Stowage factor (m^3/t)**
Fines up to 25 mm	Not applicable	1,408	0.71
Hazard classification			
Class	**Subsidiary hazard(s)**	**MHB**	**Group**
Not applicable	Not applicable	Not applicable	C

Hazard
No special hazards.
This cargo is non-combustible or has a low fire risk.

Stowage and segregation
No special requirements.

Hold cleanliness
No special requirements.

Weather precautions
No special requirements.

Loading
Trim in accordance with the relevant provisions required under sections 4 and 5 of this Code.

Precautions
No special requirements.

Ventilation
No special requirements.

Carriage
No special requirements.

Discharge
No special requirements.

Clean-up
No special requirements.

SUGAR

Description
Depending on type, sugar may be either brown or white granules, with a very low moisture content to the order of 0% to 0.05%.

Characteristics

Physical properties			
Size	**Angle of repose**	**Bulk density (kg/m^3)**	**Stowage factor (m^3/t)**
Granules up to 3 mm	Not applicable	625 to 1,000	1.00 to 1.60
Hazard classification			
Class	**Subsidiary hazard(s)**	**MHB**	**Group**
Not applicable	Not applicable	Not applicable	C

Hazard
As sugar dissolves in water, ingress of water may result in the creation of air pockets in the body of the cargo with the ship's motion. The hazards are then similar to the hazards presented by cargoes which may liquefy. In case of ingress of water into the holds, the risk to the stability of the ship through dissolution of sugar (formation of a liquid base and shifting of cargo), should be recognized. This cargo is highly soluble.

Stowage and segregation
No special requirements.

Hold cleanliness
No special requirements.

Weather precautions
This cargo shall be kept as dry as practicable. This cargo shall not be handled during precipitation. During handling of this cargo, all non-working hatches of the cargo spaces into which this cargo is loaded, or to be loaded, shall be closed.

Loading
Trim in accordance with the relevant provisions required under sections 4 and 5 of this Code.

Precautions
No special requirements.

Ventilation
No special requirements.

Carriage
After the completion of loading of this cargo, the hatches of the cargo spaces shall be sealed to prevent water ingress, as necessary.

Discharge
No special requirements.

Clean-up
No special requirements.

SUGARCANE BIOMASS PELLETS

Description

Sugarcane biomass pellets are light blonde to chocolate brown in colour; very hard and cannot be easily squashed. Sugarcane biomass pellets are made of bagasse, straw and leaves left over from industrial and agricultural activities. Normally there are no additives or binders blended into the pellet. This schedule is also applicable to sugarcane biomass pellets produced with the use of up to 2% of oxide-based mineral additives such as calcium, magnesium and aluminium oxides. The raw material is fragmented, dried and extruded into pellet form. The raw material is compressed to approximately one-third of its original volume and the finished sugarcane biomass pellets typically have a moisture content of 6 to 10%.

Characteristics

Physical properties			
Size	**Angle of repose**	**Bulk density (kg/m^3)**	**Stowage factor (m^3/t)**
Cylindrical with Diameter: 6 mm to 12 mm Length: 10 to 50 mm	Approximately 30°	600 to 700	1.43 to 1.67
Hazard classification			
Class	**Subsidiary hazard(s)**	**MHB**	**Group**
Not applicable	Not applicable	CB and/or WF and/or WT and/or OH	B

Hazard

Shipments are subject to oxidation leading to depletion of oxygen and increase of carbon monoxide and carbon dioxide in cargo and communicating spaces (also see Weather precautions).

Swelling occurs if exposed to moisture. Sugarcane biomass pellets may ferment over time if moisture content is over 15% leading to generation of asphyxiating and flammable gases which may cause spontaneous combustion. Handling of sugarcane biomass pellets may cause dust to develop. Risk of explosion at high dust concentration.

Stowage and segregation

Segregation as required for class 4.1 materials.

Hold cleanliness

Clean and dry as relevant to the hazards of the cargo.

Weather precautions

This cargo shall be kept as dry as practicable. This cargo shall not be handled during precipitation. During handling of this cargo, all non-working hatches of the cargo spaces into which this cargo is loaded, or to be loaded, shall be closed. There is a high risk of renewed oxygen depletion and carbon monoxide formation in previously ventilated adjacent spaces after closure of the hatch covers.

Loading

Trim in accordance with the relevant provisions required under sections 4 and 5 of this Code.

Precautions
Entry of personnel into the cargo spaces containing this cargo or the connecting spaces shall not be permitted until tests have been carried out and it has been established that the oxygen content and carbon monoxide levels have been restored to the following levels: oxygen 21% and carbon monoxide < 100 ppm.* Use of cargo hold lighting such as hot halogen lamps shall be avoided in the proximity of cargo spaces containing this cargo. Fuses to such lights shall be removed or secured while this cargo is present in the cargo space. Precautions shall be taken to prevent generation of high concentrations of dust during handling and cleaning of this cargo.

Ventilation
Cargo spaces carrying this cargo shall not be ventilated during voyage. Ventilation of enclosed spaces adjacent to a cargo hold before entry may be necessary even if these spaces are apparently sealed from the cargo hold.

Carriage
Hatches of the cargo spaces carrying this cargo shall be weathertight to prevent the ingress of water.

Discharge
No special requirements.

Clean-up
No special requirements.

Emergency procedures

Special emergency equipment to be carried Self-contained breathing apparatus and combined or individual oxygen and carbon monoxide meters should be available.
Emergency procedures Nil **Emergency action in the event of fire** Batten down; use ship's fixed fire-fighting installation, if fitted. Exclusion of air may be sufficient to control fire. Extinguish fire with carbon dioxide, foam or water. **Medical first aid** Refer to the *Medical First Aid Guide* (MFAG), as amended.

* Refer to *Revised recommendations for entering enclosed spaces aboard ships* (resolution A.1050(27)).

SULPHATE OF POTASH AND MAGNESIUM

Description
Granular light brown material. Solution in water is almost neutral. May have a slight odour, depending on the process of manufacturer. Melting point: 72°C. Moisture: 0.02%.

Characteristics

Physical properties			
Size	**Angle of repose**	**Bulk density (kg/m^3)**	**Stowage factor (m^3/t)**
Not applicable	Not applicable	1,000 to 1,124	0.89 to 1.00
Hazard classification			
Class	**Subsidiary hazard(s)**	**MHB**	**Group**
Not applicable	Not applicable	Not applicable	C

Hazard
No special hazards.
This cargo is highly soluble.
This cargo is non-combustible or has a low fire risk.

Stowage and segregation
No special requirements.

Hold cleanliness
Clean and dry as relevant to the hazards of the cargo.

Weather precautions
This cargo shall be kept as dry as practicable. This cargo shall not be handled during precipitation. During handling of this cargo, all non-working hatches of the cargo spaces into which this cargo is loaded, or to be loaded, shall be closed.

Loading
The cargo shall be trimmed in accordance with the cargo information required by section 4 of this Code. If doubt exists, trim reasonably level to the boundaries of the cargo space so as to minimize the risk of shifting and to ensure that adequate stability will be maintained during the voyage.

Precautions
No special requirements.

Ventilation
No special requirements.

Carriage
No special requirements.

Discharge
No special requirements.

Clean-up
No special requirements.

SULPHUR (formed, solid)

This schedule shall not apply to crushed, lump and coarse-grained sulphur (see SULPHUR UN 1350), or to co-products from sour gas processing or oil refinery operations NOT subjected to the below-described forming process.

Description
A co-product recovered from sour gas processing or oil refinery operations that has been subjected to a forming process that converts sulphur from a molten state into specific solid shapes (e.g. prills, granules, pellets, pastilles or flakes); bright yellow in colour; odourless.

Characteristics

Physical properties			
Size	**Angle of repose**	**Bulk density (kg/m^3)**	**Stowage factor (m^3/t)**
Approx. 1 mm to 10 mm	Not applicable	900 to 1,350	0.74 to 1.11
Hazard classification			
Class	**Subsidiary hazard(s)**	**MHB**	**Group**
Not applicable	Not applicable	Not applicable	C

Hazard
This cargo is non-combustible or has a low fire risk. If involved in a fire, cargo may generate harmful gases.
When handled and shipped in accordance with the provisions of the schedule, this cargo poses no corrosion or dust hazards for human tissue or vessel.

Stowage and segregation
"Separated from" strong oxidizers, such as fluorine, chlorine, chlorates, nitrates (nitric acid), peroxides, liquid oxygen, permanganates, dichromates or the like.

Hold cleanliness
Clean and dry as relevant to the hazards of the cargo. Holds shall not be washed with seawater.

Weather precautions
No special requirements.

Loading
Trim in accordance with the relevant provisions required under sections 4 and 5 of this Code. Appropriate precautions shall be taken to minimize impact, abrasion and crushing when handling to prevent dust from forming. Standard application of surfactants* inhibits airborne dust from forming.

Precautions
Protect machinery, accommodations and equipment from small particles or any dust if formed. Persons involved in cargo handling shall wear protective clothing, goggles and dust filter masks. Holds including trimming plates and tank tops shall be treated with protective coating such as lime-wash to avoid any potential corrosive reaction between sulphur, water and steel. Upper sections shall have a sound coating of paint. Hatches shall be sealed tightly.

* A fine water-based spray that promotes the binding of smaller particles to larger particles.

Ventilation
Surface ventilation only, either natural or mechanical, shall be conducted, as necessary, during the voyage for this cargo.

Carriage
As a fine spray of fresh water or surfactant is added during loading, bilges shall be sounded and pumped out as necessary throughout the voyage.

Discharge
Appropriate safety precautions shall be taken when entering the cargo spaces, particularly in the area of the bottom layers of sulphur in ships hold, taking into account the recommendations developed by the Organization.*

Appropriate precautions shall be taken to minimize impact, abrasion and crushing when handling to prevent dust from forming.

Clean-up
Persons involved in clean-up shall wear hard hats, protective goggles, long-sleeve shirts, long pants and impervious gloves. Use of approved respirators shall be considered. Holds shall be thoroughly washed using only fresh water following discharge.

Appropriate safety precautions shall be taken when entering the cargo spaces, taking into account the recommendations developed by the Organization.*

SULPHUR UN 1350
(crushed lump and coarse grained)

Note: Fine grained sulphur (flowers of sulphur) shall not be transported in bulk.

Description
A mineral substance found free in volcanic countries. Yellow in colour, brittle, insoluble in water, but readily fusible by heat. Sulphur is loaded in a damp or wet condition.

Characteristics

Physical properties			
Size	**Angle of repose**	**Bulk density (kg/m^3)**	**Stowage factor (m^3/t)**
Particles or lumps of any size	Not applicable	1,053 to 1,176	0.85 to 0.95
Hazard classification			
Class	**Subsidiary hazard(s)**	**MHB**	**Group**
4.1	Not applicable		B

Hazard
Flammability and dust explosion especially during loading and unloading and after discharge and cleaning.
This cargo may ignite readily.
This cargo is non-combustible or has a low fire risk.

Stowage and segregation
"Separated from" foodstuffs.

Hold cleanliness
Clean and dry as relevant to the hazards of the cargo.

Must be thoroughly clean and washed with fresh water.

Weather precautions
No special requirements.

Loading
Trim in accordance with the relevant provisions required under sections 4 and 5 of this Code.

Precautions
When this cargo is involved in a fire, a toxic, very irritating and suffocating gas is evolved. This cargo forms explosive and sensitive mixtures with most oxidizing material. This cargo has a liability to dust explosion, which may occur especially after discharge and during cleaning. The hold trimming plates and tank tops of the cargo spaces for this cargo shall be lime-washed or coated with paint to prevent corrosion. Upper sections shall have a sound coating of paint. Electrical circuits for the equipment in cargo spaces for this cargo which is unsuitable for use in an explosive atmosphere shall be isolated by removal of links in the system other than fuses. Due consideration shall be given to the isolation of electrical circuits for the equipment in the adjacent spaces of the cargo spaces which is unsuitable for use in an explosive atmosphere. Any ventilators of the cargo spaces for this cargo shall be fitted with spark-arresting screens. Fine grained sulphur (flowers of sulphur) shall not be transported in bulk.

Ventilation
Surface ventilation only, either natural or mechanical, shall be conducted, as necessary, during the voyage for this cargo.

Carriage
Bilges in the cargo spaces carrying this cargo shall be pumped regularly to prevent accumulation of water/acid solution.

Discharge
No special requirements.

Clean-up
The cargo spaces and other structures which may have been in contact with this cargo or the dust shall not be swept. After discharge of this cargo, the cargo spaces, and other structures as necessary, shall be washed out with fresh water to remove all residues of this cargo. Then the cargo spaces shall be thoroughly dried. Wet dust or residues may form highly corrosive sulphurous acid, which is extremely dangerous to personnel and corrosive to steel. Persons involved in cleaning up shall be provided with protective clothing, goggles and dust filter masks to wear.

Emergency procedures

Special emergency equipment to be carried Self-contained breathing apparatus.
Emergency procedures Wear self-contained breathing apparatus. **Emergency action in the event of fire** Batten down; use ship's fixed fire-fighting installation, if available. Exclusion of air may be sufficient to control the fire. **Do not use water**. **Medical first aid** Refer to the *Medical First Aid Guide* (MFAG), as amended.

SUPERPHOSPHATE

Description
Greyish-white. Moisture: 0% to 7%. Hygroscopic.

Characteristics

Physical properties			
Size	**Angle of repose**	**Bulk density (kg/m^3)**	**Stowage factor (m^3/t)**
Granular, fines and powder up to 0.15 mm diameter	30° to 40°	1,000 to 1,190	0.81 to 1.00
Hazard classification			
Class	**Subsidiary hazard(s)**	**MHB**	**Group**
Not applicable	Not applicable	Not applicable	C

Hazard
No special hazards.
This cargo is hygroscopic and will cake if wet.
This cargo is non-combustible or has a low fire risk.

Stowage and segregation
No special requirements.

Hold cleanliness
Clean and dry as relevant to the hazards of the cargo.

Weather precautions
This cargo shall be kept as dry as practicable. This cargo shall not be handled during precipitation. During handling of this cargo, all non-working hatches of the cargo spaces into which this cargo is loaded, or to be loaded, shall be closed.

Loading
Trim in accordance with the relevant provisions required under sections 4 and 5 of this Code.

Precautions
The hold trimming plates and tank tops of the cargo spaces for this cargo shall be lime-washed or coated with paint to prevent corrosion.

Ventilation
The cargo spaces carrying this cargo shall not be ventilated during voyage.

Carriage
Moisture from condensation, cargo heating or leaking hatchcovers may cause formation of phosphoric or phosphorous acid which may cause corrosion to steelwork. After the completion of loading of this cargo, the hatches of the cargo spaces shall be sealed, as necessary. This cargo will decompose burlap or canvas cloth covering bilge wells.

Discharge
Superphosphate is hygroscopic and may cake in overhangs, impairing safety during discharge. If this cargo has hardened, it shall be trimmed to avoid the formation of overhangs, as necessary.

Clean-up
After discharge of this cargo, particular attention shall be given to bilge wells of the cargo spaces.

SUPERPHOSPHATE (triple, granular)

Description
Granular in form, dark grey colour and, depending on its source, can be dusty. Hygroscopic.

Characteristics

Physical properties			
Size	**Angle of repose**	**Bulk density (kg/m^3)**	**Stowage factor (m^3/t)**
2 mm to 4 mm	Not applicable	813 to 909	1.10 to 1.23
Hazard classification			
Class	**Subsidiary hazard(s)**	**MHB**	**Group**
Not applicable	Not applicable	Not applicable	C

Hazard
No special hazards.
This cargo is hygroscopic and will cake if wet.
This cargo is non-combustible or has a low fire risk.

Stowage and segregation
No special requirements.

Hold cleanliness
Clean and dry as relevant to the hazards of the cargo.

Weather precautions
This cargo shall be kept as dry as practicable. This cargo shall not be handled during precipitation. During handling of this cargo, all non-working hatches of the cargo spaces into which this cargo is loaded, or to be loaded, shall be closed.

Loading
Trim in accordance with the relevant provisions required under sections 4 and 5 of this Code.

Precautions
Hold trimming plates and tank tops shall be lime-washed to prevent corrosion.

Ventilation
The cargo spaces carrying this cargo shall not be ventilated during voyage.

Carriage
Moisture from condensation, cargo heating or leaking hatchcovers may cause formation of phosphoric or phosphorous acid, which may cause corrosion to steelwork. After the completion of loading of this cargo, the hatches of the cargo spaces shall be sealed, as necessary. This cargo will decompose burlap or canvas cloth covering bilge wells.

Discharge
If this cargo has hardened, it shall be trimmed to avoid the formation of overhangs, as necessary.

Clean-up
After discharge of this cargo, particular attention shall be given to bilge wells of the cargo spaces.

SYNTHETIC CALCIUM FLUORIDE

Description
Odourless white-light brown material containing up to 70-80% calcium fluoride, 5-10% aluminium fluoride and 10-20% silicon dioxide.

The product consists of large particles and lumps which may break up during transport generating powder.

The product is insoluble in water.

Characteristics

Physical properties			
Size	**Angle of repose**	**Bulk density (kg/m^3)**	**Stowage factor (m^3/t)**
Up to 30 mm	Not applicable	700 to 900	1.11 to 1.43
Hazard classification			
Class	**Subsidiary hazard(s)**	**MHB**	**Group**
Not applicable	Not applicable	Not applicable	A

Hazard
This cargo may liquefy if shipped at a moisture content in excess of its transportable moisture limit (TML). See sections 7 and 8 of this Code.
This cargo is non-combustible or has a low fire risk.

Stowage and segregation
"Separated from" hydrofluoric acid, chlorine fluoride, manganese fluoride and oxygen difluoride.

Hold cleanliness
No special requirements.

Weather precautions
When a cargo is carried in a ship other than a ship complying with the requirements in 7.3.2 of this Code, the following provisions shall be complied with:

.1 the moisture content of the cargo shall be kept less than its TML during loading operations and the voyage;

.2 unless expressly provided otherwise in this individual schedule, the cargo shall not be handled during precipitation;

.3 unless expressly provided otherwise in this individual schedule, during handling of the cargo, all non-working hatches of the cargo spaces into which the cargo is loaded, or to be loaded, shall be closed;

.4 the cargo may be handled during precipitation under the conditions stated in the procedures required in 4.3.3 of this Code; and

.5 the cargo in a cargo space may be discharged during precipitation provided that the total amount of the cargo in the cargo space is to be discharged in the port.

Loading
Trim in accordance with the relevant provisions required under sections 4 and 5 of this Code.

Precautions
Appropriate precautions shall be taken to protect machinery and accommodation spaces from the dust of the cargo. Bilge wells of the cargo spaces shall be protected from ingress of the cargo. Due consideration shall be given to protect equipment from the dust of the cargo.

Ventilation
No special requirements.

Carriage
The appearance of the surface of this cargo shall be checked regularly during the voyage. If free water above the cargo or fluid state of the cargo is observed during the voyage, the master shall take appropriate actions to prevent cargo shifting and potential capsize of the ship, and give consideration to seeking emergency entry into a place of refuge.

Discharge
No special requirements.

Clean-up
No special requirements.

SYNTHETIC SILICON DIOXIDE

Description
Odourless white powder containing up to 85% silicon dioxide, about 7% aluminium fluoride and up to 8% crystal water in dry weight.
The product has very low solubility in water.

Characteristics

Physical properties			
Size	**Angle of repose**	**Bulk density (kg/m^3)**	**Stowage factor (m^3/t)**
Up to 0.1 mm	Approximately 40°	300 to 500	2.00 to 3.33
Hazard classification			
Class	**Subsidiary hazard(s)**	**MHB**	**Group**
Not applicable	Not applicable	Not applicable	A

Hazard
This cargo may liquefy if shipped at a moisture content in excess of its transportable moisture limit (TML). See sections 7 and 8 of this Code.
This cargo is non-combustible or has a low fire risk.

Stowage and segregation
"Separated from" hydrofluoric acid, chlorine fluoride, manganese fluoride and oxygen difluoride.

Hold cleanliness
No special requirements.

Weather precautions
When a cargo is carried in a ship other than a ship complying with the requirements in 7.3.2 of this Code, the following provisions shall be complied with:

.1 the moisture content of the cargo shall be kept less than its TML during loading operations and the voyage;

.2 unless expressly provided otherwise in this individual schedule, the cargo shall not be handled during precipitation;

.3 unless expressly provided otherwise in this individual schedule, during handling of the cargo, all non-working hatches of the cargo spaces into which the cargo is loaded, or to be loaded, shall be closed;

.4 the cargo may be handled during precipitation under the conditions stated in the procedures required in 4.3.3 of this Code; and

.5 the cargo in a cargo space may be discharged during precipitation provided that the total amount of the cargo in the cargo space is to be discharged in the port.

Loading
Trim in accordance with the relevant provisions required under sections 4 and 5 of this Code.

Precautions
Appropriate precautions shall be taken to protect machinery and accommodation spaces from the dust of the cargo. Bilge wells of the cargo spaces shall be protected from ingress of the cargo.
Due consideration shall be given to protect equipment from the dust of the cargo.

Ventilation
No special requirements.

Carriage
The appearance of the surface of this cargo shall be checked regularly during the voyage. If free water above the cargo or fluid state of the cargo is observed during the voyage, the master shall take appropriate actions to prevent cargo shifting and potential capsize of the ship, and give consideration to seeking emergency entry into a place of refuge.

Discharge
No special requirements.

Clean-up
No special requirements.

TACONITE PELLETS

Description
Ore. Grey, round steel pellets. Moisture: 2%.

Characteristics

Physical properties			
Size	**Angle of repose**	**Bulk density (kg/m^3)**	**Stowage factor (m^3/t)**
Pellets up to 15 mm diameter	Not applicable	599 to 654	1.53 to 1.67
Hazard classification			
Class	**Subsidiary hazard(s)**	**MHB**	**Group**
Not applicable	Not applicable	Not applicable	C

Hazard
No special hazards.
This cargo is non-combustible or has a low fire risk.

Stowage and segregation
No special requirements.

Hold cleanliness
No special requirements.

Weather precautions
No special requirements.

Loading
Trim in accordance with the relevant provisions required under sections 4 and 5 of this Code.

Precautions
No special requirements.

Ventilation
No special requirements.

Carriage
No special requirements.

Discharge
No special requirements.

Clean-up
No special requirements.

TALC

Description
Talc is an extremely soft, whitish, green or greyish natural hydrated magnesium silicate. It has a characteristic soapy or greasy feel.

Characteristics

Physical properties			
Size	**Angle of repose**	**Bulk density (kg/m^3)**	**Stowage factor (m^3/t)**
Powdery up to 100 mm lumps	Not applicable	1,370 to 1,563	0.64 to 0.73
Hazard classification			
Class	**Subsidiary hazard(s)**	**MHB**	**Group**
Not applicable	Not applicable	Not applicable	C

Hazard
No special hazards.
This cargo is non-combustible or has a low fire risk.

Stowage and segregation
No special requirements.

Hold cleanliness
No special requirements.

Weather precautions
No special requirements.

Loading
Trim in accordance with the relevant provisions required under sections 4 and 5 of this Code.

Precautions
No special requirements.

Ventilation
No special requirements.

Carriage
No special requirements.

Discharge
No special requirements.

Clean-up
No special requirements.

TANKAGE

Description
The dried sweeping of animal matter from slaughterhouse floors. Very dusty.

Characteristics

Physical properties			
Size	**Angle of repose**	**Bulk density (kg/m^3)**	**Stowage factor (m^3/t)**
Not applicable	Not applicable	-	-
Hazard classification			
Class	**Subsidiary hazard(s)**	**MHB**	**Group**
Not applicable	Not applicable	SH and/or OH	B

Hazard
Subject to spontaneous heating and possible ignition. Possibly infectious.

Stowage and segregation
Segregation as required for class 4.2 materials.
"Separated by a complete compartment or hold from" foodstuffs.

Hold cleanliness
Clean and dry as relevant to the hazards of the cargo.

Weather precautions
No special requirements.

Loading
Trim in accordance with the relevant provisions required under sections 4 and 5 of this Code.

Precautions
Bilge wells shall be clean, dry and covered as appropriate, to prevent ingress of the cargo.
Do not load if the temperature is above 38°C.

Appropriate precautions shall be taken to protect machinery and accommodation spaces from the dust of the cargo. Bilge wells of the cargo spaces shall be protected from ingress of the cargo. Due consideration shall be given to protect equipment from the dust of the cargo. Persons who may be exposed to the dust of the cargo shall wear goggles or other equivalent dust eye-protection and dust filter masks. Those persons shall wear protective clothing, as necessary.

Ventilation
No special requirements.

Carriage
The temperature of this cargo shall be measured daily during the voyage. The results of measurements shall be recorded to check possible self-heating.

Discharge
No special requirements.

Clean-up
No special requirements.

Emergency procedures

Special emergency equipment to be carried Self-contained breathing apparatus.
Emergency procedures Wear self-contained breathing apparatus. **Emergency action in the event of fire** Batten down; use ship's fixed fire-fighting installation, if fitted. Use full protective clothing in case of fire situation. **Medical first aid** Refer to the *Medical First Aid Guide* (MFAG), as amended.

TAPIOCA

Description
Dry, dusty mixture of powder and granules.

Characteristics

Physical properties			
Size	**Angle of repose**	**Bulk density (kg/m^3)**	**Stowage factor (m^3/t)**
Powder and granules	32°	735	1.36
Hazard classification			
Class	**Subsidiary hazard(s)**	**MHB**	**Group**
Not applicable	Not applicable	Not applicable	C

Hazard
May heat spontaneously with oxygen depletion in the cargo space.
This cargo is non-combustible or has a low fire risk.

Stowage and segregation
No special requirements.

Hold cleanliness
No special requirements.

Weather precautions
No special requirements.

Loading
Trim in accordance with the relevant provisions required under sections 4 and 5 of this Code.

Precautions
Appropriate precautions shall be taken to protect machinery and accommodation spaces from the dust of the cargo. Bilge wells of the cargo spaces shall be protected from ingress of the cargo. Due consideration shall be given to protect equipment from the dust of the cargo. Persons who may be exposed to the dust of the cargo shall wear protective clothing, goggles or other equivalent dust eye-protection and dust filter masks, as necessary.

Ventilation
The cargo spaces carrying this cargo shall not be ventilated during voyage.

Carriage
No special requirements.

Discharge
No special requirements.

Clean-up
No special requirements.

TITANOMAGNETITE SAND

Description
Titanomagnetite sand has a nominal iron content of 57%.

Characteristics

Physical properties			
Size	**Angle of repose**	**Bulk density (kg/m^3)**	**Stowage factor (m^3/t)**
Up to 0.4 mm	Not applicable	2,740 to 2,820	0.35 to 0.36
Hazard classification			
Class	**Subsidiary hazard(s)**	**MHB**	**Group**
Not applicable	Not applicable	Not applicable	A

Hazard
This cargo may liquefy if shipped at a moisture content in excess of its transportable moisture limit (TML). See sections 7 and 8 of this Code.
This cargo is non-combustible or has a low fire risk.

Stowage and segregation
No special requirements.

Hold cleanliness
No special requirements.

Weather precautions
When a cargo is carried in a ship other than a ship complying with the requirements in 7.3.2 of this Code, the following provisions shall be complied with:

.1 the moisture content of the cargo shall be kept less than its TML during loading operations and the voyage;

.2 unless expressly provided otherwise in this individual schedule, the cargo shall not be handled during precipitation;

.3 unless expressly provided otherwise in this individual schedule, during handling of the cargo, all non-working hatches of the cargo spaces into which the cargo is loaded, or to be loaded, shall be closed;

.4 the cargo may be handled during precipitation under the conditions stated in the procedures required in 4.3.3 of this Code; and

.5 the cargo in a cargo space may be discharged during precipitation provided that the total amount of the cargo in the cargo space is to be discharged in the port.

Loading
Cargo shall be trimmed to avoid steep surfaces of cargo that could collapse during voyage. As the density of the cargo is extremely high, the tank top may be overstressed unless the cargo is evenly spread across the tank top to equalize the weight distribution. Due consideration shall be given to ensure that the tank top is not overstressed during the voyage and during loading by a pile of the cargo.

Precautions
Bilge wells shall be clean, dry and covered to prevent ingress of the cargo. Bilge covers shall not significantly degrade the capacity or operation of the bilge system. Bilges shall be sounded and pumped out, as necessary, throughout the voyage.

Ventilation
No special requirements.

Carriage
Unless this cargo is carried in a ship complying with the requirements in 7.3.2 of this Code, the appearance of the surface of this cargo shall be checked regularly during the voyage. If free water above the cargo or fluid state of the cargo is observed during the voyage, the master shall take appropriate actions to prevent cargo shifting and potential capsize of the ship, and give consideration to seeking emergency entry into a place of refuge.

Discharge
No special requirements.

Clean-up
After discharge of this cargo, the bilge wells shall be checked and any blockage shall be removed. If the ship is fitted with a de-watering system of the cargo spaces, after discharge of this cargo, the system shall be checked and any blockage in the systems shall be removed.

UREA

Description
White, granular and odourless. Moisture content is less than 1%. Hygroscopic.

Characteristics

Physical properties			
Size	**Angle of repose**	**Bulk density (kg/m^3)**	**Stowage factor (m^3/t)**
1 mm to 4 mm	28° to 45°	645 to 855	1.17 to 1.56
Hazard classification			
Class	**Subsidiary hazard(s)**	**MHB**	**Group**
Not applicable	Not applicable	Not applicable	C

Hazard
No special hazards.
This cargo is hygroscopic and will cake if wet.
Urea (either pure or impure) may, in the presence of moisture, damage paintwork or corrode steel.
This cargo is non-combustible or has a low fire risk.

Stowage and segregation
No special requirements.

Hold cleanliness
No special requirements.

Weather precautions
This cargo shall be kept as dry as practicable. This cargo shall not be handled during precipitation. During handling of this cargo, all non-working hatches of the cargo spaces into which this cargo is loaded, or to be loaded, shall be closed.

Loading
Trim in accordance with the relevant provisions required under sections 4 and 5 of this Code.

Precautions
No special requirements.

Ventilation
The cargo spaces carrying this cargo shall not be ventilated during voyage.

Carriage
No special requirements.

Discharge
Urea is hygroscopic and may cake in overhangs, impairing safety during discharge. If this cargo has hardened, it shall be trimmed to avoid the formation of overhangs, as necessary.

Clean-up
After discharge of this cargo, the cargo spaces shall be swept, washed out and dried.

VANADIUM ORE

Characteristics

Physical properties			
Size	**Angle of repose**	**Bulk density (kg/m^3)**	**Stowage factor (m^3/t)**
Not applicable	Not applicable	1,786	0.56
Hazard classification			
Class	**Subsidiary hazard(s)**	**MHB**	**Group**
Not applicable	Not applicable	TX	B

Hazard
Dust may be toxic.
This cargo is non-combustible or has a low fire risk.

Stowage and segregation
Segregation as required for class 6.1 materials.
"Separated from" foodstuffs.

Hold cleanliness
No special requirements.

Weather precautions
No special requirements.

Loading
Trim in accordance with the relevant provisions required under sections 4 and 5 of this Code.

As the density of the cargo is extremely high, the tank top may be overstressed unless the cargo is evenly spread across the tank top to equalize the weight distribution. Due consideration shall be given to ensure that the tank top is not overstressed during the voyage and during loading by a pile of the cargo.

Precautions
Exposure of persons to dust shall be minimized.
Appropriate precautions shall be taken to protect machinery and accommodation spaces from the dust of the cargo. Bilge wells of the cargo spaces shall be protected from ingress of the cargo. Due consideration shall be given to protect equipment from the dust of the cargo. Persons who may be exposed to the dust of the cargo shall wear goggles or other equivalent dust eye-protection and dust filter masks. Those persons shall wear protective clothing, as necessary.

Ventilation
No special requirements.

Carriage
No special requirements.

Discharge
No special requirements.

Clean-up
No special requirements.

Emergency procedures

Special emergency equipment to be carried Self-contained breathing apparatus.
Emergency procedures Wear self-contained breathing apparatus. **Emergency action in the event of fire** Batten down; use ship's fixed fire-fighting installation, if fitted. Exclusion of air may be sufficient to control fire. **Medical first aid** Refer to the *Medical First Aid Guide* (MFAG), as amended.

VERMICULITE

Description
A mineral of the mica group. Grey. Average moisture: 6% to 10%. May give off dust.

Characteristics

Physical properties			
Size	**Angle of repose**	**Bulk density (kg/m^3)**	**Stowage factor (m^3/t)**
3 mm	Not applicable	730	1.37
Hazard classification			
Class	**Subsidiary hazard(s)**	**MHB**	**Group**
Not applicable	Not applicable	Not applicable	C

Hazard
No special hazards.
This cargo is non-combustible or has a low fire risk.

Stowage and segregation
No special requirements.

Hold cleanliness
No special requirements.

Weather precautions
No special requirements.

Loading
Trim in accordance with the relevant provisions required under sections 4 and 5 of this Code.

Precautions
Appropriate precautions shall be taken to protect machinery and accommodation spaces from the dust of the cargo. Bilge wells of the cargo spaces shall be protected from ingress of the cargo. Due consideration shall be given to protect equipment from the dust of the cargo. Persons who may be exposed to the dust of the cargo shall wear protective clothing, goggles or other equivalent dust eye-protection and dust filter masks, as necessary.
Prior to loading, a certificate based on test shall be provided by the manufacturer or shipper stating that the asbestos content is less than 1%.

Ventilation
No special requirements.

Carriage
No special requirements.

Discharge
No special requirements.

Clean-up
No special requirements.

WHITE QUARTZ

Description
99.6% silica content.

Characteristics

Physical properties			
Size	**Angle of repose**	**Bulk density (kg/m^3)**	**Stowage factor (m^3/t)**
Lumps up to 150 mm	Not applicable	1,639	0.61
Hazard classification			
Class	**Subsidiary hazard(s)**	**MHB**	**Group**
Not applicable	Not applicable	Not applicable	C

Hazard
No special hazards.
This cargo is non-combustible or has a low fire risk.

Stowage and segregation
No special requirements.

Hold cleanliness
No special requirements.

Weather precautions
No special requirements.

Loading
Trim in accordance with the relevant provisions required under sections 4 and 5 of this Code.

Precautions
No special requirements.

Ventilation
No special requirements.

Carriage
No special requirements.

Discharge
No special requirements.

Clean-up
No special requirements.

WOODCHIPS

Description
Natural timber mechanically chipped into the approximate size of a business card.

Characteristics

Physical properties			
Size	**Angle of repose**	**Bulk density (kg/m^3)**	**Stowage factor (m^3/t)**
As above	Not applicable	326	3.07
Hazard classification			
Class	**Subsidiary hazard(s)**	**MHB**	**Group**
Not applicable	Not applicable	CB	B

Hazard
This material possesses a chemical hazard. Some shipments may be subject to oxidation leading to depletion of oxygen and increase of carbon dioxide in cargo and adjacent spaces. With moisture content of 15% or more this cargo has a low fire risk. As the moisture content decreases, the fire risk increases. When dry, woodchips can be easily ignited by external sources; are readily combustible and can ignite by friction. A condition with complete depletion of oxygen may be present in less than 48 hours.

Stowage and segregation
Segregation as for class 4.1 materials.

Hold cleanliness
No special requirements.

Weather precautions
No special requirements.

Loading
Trim in accordance with the relevant provisions required under sections 4 and 5 of this Code.

Precautions
Entry of personnel into cargo and adjacent confined spaces shall not be permitted until tests have been carried out and it has been established that the oxygen level is 20.7%.* If this condition is not met, additional ventilation shall be applied to the cargo hold or adjacent enclosed spaces and re-measuring shall be conducted after a suitable interval.

An oxygen meter shall be worn and activated by all crew when entering cargo and adjacent enclosed spaces.

In dry weather, dust which settles on deck will dry out quickly and is easily ignited. Appropriate precautions shall be taken to prevent fire.

Ventilation
Ventilation of enclosed spaces adjacent to a cargo hold before entry may be necessary even if these spaces are apparently sealed from the cargo hold.

* Refer to *Revised recommendations for entering enclosed spaces aboard ships* (resolution A.1050(27)).

Carriage
No special requirements.

Discharge
No special requirements.

Clean-up
No special requirements.

Emergency procedures

Special emergency equipment to be carried Self-contained breathing apparatus and oxygen meters should be available.
Emergency procedures Nil **Emergency action in the event of fire** Batten down; use ship's fixed fire-fighting installation, if fitted. Exclusion of air may be sufficient to control fire. **Medical first aid** Refer to the *Medical First Aid Guide* (MFAG), as amended.

WOOD PELLETS CONTAINING ADDITIVES AND/OR BINDERS

Description

The wood pellets covered by this schedule are those containing additives and/or binders. These wood pellets are light blond to dark brown in colour; very hard and cannot be easily squashed; have a typical specific density between 1,100 to 1,700 kg/m^3. Wood pellets are made of sawdust, planer shavings and other wood waste such as bark coming out of the lumber manufacturing processes. The raw material is fragmented, dried and extruded into pellet form using appropriate additives and/or binders. The raw material is compressed to approximately one-third of its original volume. The finished wood pellets typically have a moisture content of 4% to 8%. Wood pellets are used as a fuel in district heating and electrical power generation as well as a fuel for small space heaters such as stoves and fireplaces.

Wood pellets are also used as animal bedding due to the absorption characteristics. Such wood pellets typically have a moisture content of 8% to 10%.

For wood pellets not containing any additives and/or binders see separate schedule.

Characteristics

Physical properties			
Size	**Angle of repose**	**Bulk density (kg/m^3)**	**Stowage factor (m^3/t)**
Cylindrical with Diameter: 3 mm to 12 mm Length: 10 to 20 mm	Approximately 30°	600 to 750	1.33 to 1.67
Hazard classification			
Class	**Subsidiary hazard(s)**	**MHB**	**Group**
Not applicable	Not applicable	WF	B

Hazard

Shipments are subject to oxidation leading to depletion of oxygen and increase of carbon monoxide and carbon dioxide in cargo and communicating spaces (also see Weather precautions).

Swelling if exposed to moisture. Wood pellets may ferment over time if moisture content is over 15%, leading to generation of asphyxiating and flammable gases which may cause spontaneous combustion.

Handling of wood pellets may cause dust to develop. Risk of explosion at high dust concentration.

Stowage and segregation

Segregate as for class 4.1 materials.

Hold cleanliness

Clean and dry as relevant to the hazards of the cargo.

Weather precautions

This cargo shall be kept as dry as practicable. This cargo shall not be handled during precipitation. During handling of this cargo, all non-working hatches of the cargo spaces into which this cargo is loaded, or to be loaded, shall be closed. There is a high risk of renewed oxygen depletion and carbon monoxide formation in previously ventilated adjacent spaces after closure of the hatch covers.

Loading
Trim in accordance with the relevant provisions required under sections 4 and 5 of this Code.

Precautions
Entry of personnel into cargo and adjacent confined spaces shall not be permitted until tests have been carried out and it has been established that the oxygen content and carbon monoxide levels have been restored to the following levels: oxygen 21% and carbon monoxide < 100 ppm.* If these conditions are not met, additional ventilation shall be applied to the cargo hold or adjacent confined spaces and re-measuring shall be conducted after a suitable interval.

An oxygen and carbon monoxide meter shall be worn and activated by all crew when entering cargo and adjacent enclosed spaces.

Ventilation
Ventilation of enclosed spaces adjacent to a cargo hold before entry may be necessary even if these spaces are apparently sealed from the cargo hold.

Carriage
No special requirements.

Discharge
No special requirements.

Clean-up
No special requirements.

Emergency procedures

Special emergency equipment to be carried Self-contained breathing apparatus and combined or individual oxygen and carbon monoxide meters should be available.
Emergency procedures Nil **Emergency action in the event of fire** Batten down; use ship's fixed fire-fighting installation, if fitted. Exclusion of air may be sufficient to control fire. Extinguish fire with carbon dioxide, foam or water. **Medical first aid** Refer to the *Medical First Aid Guide* (MFAG), as amended.

* Refer to *Revised recommendations for entering enclosed spaces aboard ships* (resolution A.1050(27)).

WOOD PELLETS NOT CONTAINING ANY ADDITIVES AND/OR BINDERS

Description

The wood pellets covered by this schedule are those not containing any additives and/or binders. These wood pellets are light blond to dark brown in colour; very hard and cannot be easily squashed; have a typical specific density between 1,100 to 1,700 kg/m^3. The wood pellets are made of sawdust, planer shavings and other wood waste such as bark coming out of the lumber manufacturing processes. The raw material is fragmented, dried and extruded into pellet form. The raw material is compressed to approximately one-third of its original volume. The finished wood pellets typically have a moisture content of 4% to 8%. Wood pellets are used as a fuel in district heating and electrical power generation as well as a fuel for small space heaters such as stoves and fireplaces.

Wood pellets are also used as animal bedding due to the absorption characteristics. Such wood pellets typically have a moisture content of 8% to 10%.

For wood pellets containing additives and/or binders see separate schedule.

Characteristics

Physical properties			
Size	**Angle of repose**	**Bulk density (kg/m^3)**	**Stowage factor (m^3/t)**
Cylindrical with Diameter: 3 mm to 12 mm Length: 10 mm to 20 mm	Approximately 30°	600 to 750	1.33 to 1.67
Hazard classification			
Class	**Subsidiary hazard(s)**	**MHB**	**Group**
Not applicable	Not applicable	OH	B

Hazard

Shipments are subject to oxidation leading to depletion of oxygen and increase of carbon monoxide and carbon dioxide in cargo and communicating spaces (also see "Weather precautions").

Swelling if exposed to moisture. Wood pellets may ferment over time if moisture content is over 15%, leading to generation of asphyxiating and flammable gases but gas concentrations do not reach flammable levels. This cargo has a low fire risk.

Handling of wood pellets may cause dust to develop. Risk of explosion at high dust concentration.

Stowage and segregation

Segregate as for class 4.1 materials.

Hold cleanliness

Clean and dry as relevant to the hazards of the cargo.

Weather precautions
This cargo shall be kept as dry as practicable. This cargo shall not be handled during precipitation. During handling of this cargo, all non-working hatches of the cargo spaces into which this cargo is loaded, or to be loaded, shall be closed. There is a high risk of renewed oxygen depletion and carbon monoxide formation in previously ventilated adjacent spaces after closure of the hatch covers.

Loading
Trim in accordance with the relevant provisions required under sections 4 and 5 of this Code.

Precautions
Entry of personnel into cargo and adjacent confined spaces shall not be permitted until tests have been carried out and it has been established that the oxygen content and carbon monoxide levels have been restored to the following levels: oxygen 21% and carbon monoxide < 100 ppm.* If these conditions are not met, additional ventilation shall be applied to the cargo hold or adjacent confined spaces and re-measuring shall be conducted after a suitable interval.

An oxygen and carbon monoxide meter shall be worn and activated by all crew when entering cargo and adjacent enclosed spaces.

Ventilation
Ventilation of enclosed spaces adjacent to a cargo hold before entry may be necessary even if these spaces are apparently sealed from the cargo hold.

Carriage
No special requirements.

Discharge
No special requirements.

Clean-up
No special requirements.

Emergency procedures

Special emergency equipment to be carried Self-contained breathing apparatus and combined or individual oxygen and carbon monoxide meters should be available.
Emergency procedures Nil **Emergency action in the event of fire** Batten down; use ship's fixed fire-fighting installation, if fitted. Exclusion of air may be sufficient to control fire. Extinguish fire with carbon dioxide, foam or water. **Medical first aid** Refer to the *Medical First Aid Guide* (MFAG), as amended.

* Refer to *Revised recommendations for entering enclosed spaces aboard ships* (resolution A.1050(27)).

Wood Products – General
(see Bulk Cargo Shipping Names below)

LOGS **PULP WOOD**
TIMBER **ROUNDWOOD**
SAW LOGS

Description
This schedule only applies to wood products transported in bulk, i.e. loaded and discharged by such means as elevator or grab and which are not specifically referred to in a separate schedule.

Characteristics

Physical properties			
Size	**Angle of repose**	**Bulk density (kg/m^3)**	**Stowage factor (m^3/t)**
-	Not applicable	250 to 500	2.00 to 4.00
Hazard classification			
Class	**Subsidiary hazard(s)**	**MHB**	**Group**
Not applicable	Not applicable		B

Hazard
These cargoes are liable to cause oxygen depletion and increase of carbon dioxide in the cargo space and adjacent spaces.
These cargoes are non-combustible or have a low fire risk.

Stowage and segregation
No special requirements.

Hold cleanliness
No special requirements.

Weather precautions
No special requirements.

Loading
Trim in accordance with the relevant provisions required under sections 4 and 5 of this Code.

Precautions
Entry of personnel into cargo and adjacent confined spaces shall not be permitted until tests have been carried out and it has been established that the oxygen level is 21%.* If this condition is not met, additional ventilation shall be applied to the cargo hold or adjacent enclosed spaces and remeasuring shall be conducted after a suitable interval.

An oxygen meter shall be worn and activated by all crew when entering cargo and adjacent enclosed spaces.

Ventilation
Ventilation of enclosed spaces adjacent to a cargo hold before entry may be necessary even if these spaces are apparently sealed from the cargo hold.

* Refer to *Revised recommendations for entering enclosed spaces aboard ships* (resolution A.1050(27)).

Carriage
No special requirements.

Discharge
No special requirements.

Clean-up
No special requirements.

Emergency procedures

Special emergency equipment to be carried Self-contained breathing apparatus and an oxygen meter should be available.
Emergency procedures Nil **Emergency action in the event of fire** Batten down; use ship's fixed fire-fighting installation, if fitted. Exclusion of air may be sufficient to control fire. **Medical first aid** Refer to the *Medical First Aid Guide* (MFAG), as amended.

WOOD TORREFIED

Description
Wood torrefied is wood that has been partially burned or roasted and formed into pellets or briquettes. Chocolate brown or black in colour. May contain up to 3% binder.

Characteristics

Physical properties			
Size	**Angle of repose**	**Bulk density (kg/m^3)**	**Stowage factor (m^3/t)**
Pellets with a diameter of 6 mm to 12 mm. Briquettes with a thickness of 12 mm to 50 mm and a length and width up to 75 mm.	35° or less	650 to 800	1.25 to 1.54
Hazard classification			
Class	**Subsidiary hazard(s)**	**MHB**	**Group**
Not applicable	Not applicable	CB and/or SH and/or CR	B

Hazard
Shipments may be subject to oxidation leading to depletion of oxygen and increase of carbon monoxide and carbon dioxide in cargo and adjacent spaces.

Wood torrefied is readily combustible and may self-heat and spontaneously combust.

Handling of wood torrefied may cause dust to develop with a subsequent risk of dust explosion when loading. Dust may cause eye, skin and respiratory irritation.

Stowage and segregation
Segregation as for class 4.1 materials.

Hold cleanliness
Clean and dry as relevant to the hazards of the cargo.

Weather precautions
This cargo shall be kept as dry as practicable. This cargo shall not be handled during precipitation. During handling of this cargo, all non-working hatches of the cargo spaces into which this cargo is loaded, or to be loaded, shall be closed.

Loading
Trim in accordance with the relevant provisions required under sections 4 and 5 of this Code.

Precautions
Entry of personnel into cargo and adjacent confined spaces shall not be permitted until tests have been carried out and it has been established that the oxygen content and carbon monoxide levels have been restored to the following levels: oxygen 20.7% and carbon monoxide < 100 ppm.* If these conditions are not met, additional ventilation shall be applied to the cargo hold or adjacent confined spaces and remeasuring shall be conducted after a suitable interval. An oxygen and carbon monoxide meter shall be worn and activated by all crew when entering cargo and adjacent enclosed spaces.

Persons who may be exposed to the dust of the cargo shall wear protective clothing, goggles or other equivalent dust eye-protection and dust filter masks, as necessary.

Ventilation
Ventilation of enclosed spaces adjacent to a cargo hold before entry may be necessary even if these spaces are apparently sealed from the cargo hold.

Carriage
Hatches of the cargo spaces carrying this cargo shall be weathertight to prevent the ingress of water.

Discharge
No special requirements.

Clean-up
No special requirements.

Emergency procedures

Special emergency equipment to be carried Self-contained breathing apparatus and combined or individual oxygen and carbon monoxide meters should be available.
Emergency procedures Nil **Emergency action in the event of fire** Batten down; use ship's fixed fire-fighting installation, if fitted. Exclusion of air may be sufficient to control fire. Extinguish fire with carbon dioxide, foam or water. **Medical first aid** Refer to the *Medical First Aid Guide* (MFAG), as amended.

* Refer to *Revised recommendations for entering enclosed spaces aboard ships* (resolution A.1050(27)).

ZINC ASHES UN 1435

Shipments require the approval of the competent authority of the countries of shipment and the flag State of the ship.

Characteristics

Physical properties			
Size	**Angle of repose**	**Bulk density (kg/m^3)**	**Stowage factor (m^3/t)**
Not applicable	Not applicable	900	1.11
Hazard classification			
Class	**Subsidiary hazard(s)**	**MHB**	**Group**
4.3	Not applicable		B

Hazard
In contact with moisture or water liable to give off hydrogen, a flammable gas, and toxic gases. This cargo is non-combustible or has a low fire risk.

Stowage and segregation
"Separated from" foodstuffs and all class 8 liquids.

Hold cleanliness
Clean and dry as relevant to the hazards of the cargo.

Weather precautions
This cargo shall be kept as dry as practicable before loading, during loading and during voyage. This cargo shall not be loaded during precipitation. During loading of this cargo, all non-working hatches of the cargo spaces to which this cargo is loaded, or to be loaded, shall be closed.

Loading
Trim in accordance with the relevant provisions required under sections 4 and 5 of this Code. This cargo shall not be accepted for loading when the cargo is damp or known to have been wetted.

Precautions
Reject any damp material or any material which is known to have been wetted. Possible ignition sources, including hot work, burning, smoking, electrical sparking, shall be eliminated in the vicinity of the cargo spaces containing this cargo during handling and carriage of this cargo.

Ventilation
Continuous mechanical ventilation shall be conducted during the voyage for the cargo spaces carrying this cargo. If maintaining ventilation endangers the ship or the cargo, it may be interrupted unless there is a risk of explosion or other danger due to interruption of the ventilation. In any case, mechanical ventilation shall be maintained for a reasonable period prior to discharge.

Carriage
For quantitative measurements of hydrogen, a suitable detector shall be on board while this cargo is carried. The detector shall be of certified safe type for use in explosive atmosphere. The concentration of hydrogen in the cargo spaces carrying this cargo shall be measured regularly, during the voyage, and the results of the measurements shall be recorded and kept on board.

Discharge
No special requirements.

Clean-up

After discharge of this cargo, the cargo spaces shall be swept clean twice.
Water shall not be used for cleaning of the cargo space which has contained this cargo, because of danger of gas.

Emergency procedures

Special emergency equipment to be carried Protective clothing (gloves, boots, coveralls and headgear). Self-contained breathing apparatus.
Emergency procedures Wear protective clothing and self-contained breathing apparatus. **Emergency action in the event of fire** Batten down; use ship's fixed fire-fighting installation, if available. **Do not use water**. **Medical first aid** Refer to the *Medical First Aid Guide* (MFAG), as amended.

ZINC OXIDE ENRICHED FLUE DUST

Description

This cargo, also named waelz oxide, is an odourless fine powder that aggregates into lumps. Its colour could be light brown or greyish yellow/greyish green. The main constituent is zinc oxide. Secondary constituents are lead oxides.

Characteristics

Physical properties			
Size	**Angle of repose**	**Bulk density (kg/m^3)**	**Stowage factor (m^3/t)**
Up to 10 mm	Not applicable	2,150 to 2,400	0.42 to 0.47
Hazard classification			
Class	**Subsidiary hazard(s)**	**MHB**	**Group**
Not applicable	Not applicable	TX	A and B

Hazard

This cargo may liquefy if shipped at a moisture content in excess of its transportable moisture limit (TML). See sections 7 and 8 of this Code.
The dust of the cargo is harmful and may cause long-term health effects.
This cargo is non-combustible or has a low fire risk.

Stowage and segregation

"Separated from" foodstuffs.

Hold cleanliness

Clean and dry as relevant to the hazards of the cargo.

Weather precautions

When a cargo is carried in a ship other than a ship complying with the requirements in 7.3.2 of this Code, the following provisions shall be complied with:

.1 the moisture content of the cargo shall be kept less than its TML during loading operations and the voyage;

.2 unless expressly provided otherwise in this individual schedule, the cargo shall not be handled during precipitation;

.3 unless expressly provided otherwise in this individual schedule, during handling of the cargo, all non-working hatches of the cargo spaces into which the cargo is loaded, or to be loaded, shall be closed;

.4 the cargo may be handled during precipitation under the conditions stated in the procedures required in 4.3.3 of this Code; and

.5 the cargo in a cargo space may be discharged during precipitation provided that the total amount of the cargo in the cargo space is to be discharged in the port.

Loading
Trim in accordance with the relevant provisions required under sections 4 and 5 of this Code. As the density of the cargo is extremely high, the tank top may be overstressed unless the cargo is evenly spread across the tank top to equalize the weight distribution.

Due consideration shall be given to ensure that the tank top is not overstressed during the voyage and during loading by a pile of the cargo.

Precautions
Exposure of persons to dust of the cargo shall be minimized. Appropriate precautions shall be taken to protect machinery and accommodation spaces from the dust of the cargo. Bilge wells shall be clean, dry and covered as appropriate to prevent ingress of the cargo. Persons who may be exposed to the dust of the cargo shall wear gloves, goggles or other equivalent dust eye-protection and dust filter masks. Those persons shall wear protective clothing, as necessary.

Ventilation
The cargo spaces carrying this cargo shall not be ventilated during voyage.

Carriage
The appearance of the surface of this cargo shall be checked regularly during the voyage. If free water above the cargo or fluid state of the cargo is observed during the voyage, the master shall take appropriate actions to prevent cargo shifting and potential capsize of the ship, and give consideration to seeking emergency entry into a place of refuge.

Discharge
No special requirements.

Clean up
Prior to washing out the residues of this cargo, the decks and the cargo spaces shall be shovelled and swept clean, because washing out of this cargo is difficult.

Emergency procedures

Special emergency equipment to be carried Protective clothing (gloves, boots, coveralls and dust filter masks). Self-contained breathing apparatus.
Emergency procedures Wear protective clothing and self-contained breathing apparatus. **Emergency action in the event of fire** Nil **Medical first aid** Refer to the *Medical First Aid Guide* (MFAG), as amended.

ZINC SLAG

Description
Residue generated from zinc smelting process. This cargo is highly permeable and pore water of this cargo drains quickly. It is black or red-brown in colour and either granular or lump.

Characteristics

Physical properties			
Size	**Angle of repose**	**Bulk density (kg/m^3)**	**Stowage factor (m^3/t)**
Up to 10 mm	Not applicable	1,500 to 2,500	0.40 to 0.67
Hazard classification			
Class	**Subsidiary hazard(s)**	**MHB**	**Group**
Not applicable	Not applicable	Not applicable	A

Hazard
This cargo may liquefy if shipped at a moisture content in excess of its transportable moisture limit (TML). See sections 7 and 8 of this Code. This cargo is abrasive.
This cargo is non-combustible or has a low fire risk.

Stowage and segregation
No special requirements.

Hold cleanliness
No special requirements.

Weather precautions
When a cargo is carried in a ship other than a ship complying with the requirements in 7.3.2 of this Code, the following provisions shall be complied with:

.1 the moisture content of the cargo shall be kept less than its TML during loading operations and the voyage;

.2 unless expressly provided otherwise in this individual schedule, the cargo shall not be handled during precipitation;

.3 unless expressly provided otherwise in this individual schedule, during handling of the cargo, all non-working hatches of the cargo spaces into which the cargo is loaded, or to be loaded, shall be closed;

.4 the cargo may be handled during precipitation under the conditions stated in the procedures required in 4.3.3 of this Code; and

.5 the cargo in a cargo space may be discharged during precipitation provided that the total amount of the cargo in the cargo space is to be discharged in the port.

Loading
This cargo shall be trimmed to ensure that the height difference between peaks and troughs does not exceed 5% of the ship's breadth and that the cargo slopes uniformly from the hatch boundaries to the bulkheads to avoid steep surfaces of cargo that could collapse during voyage.

When the stowage factor of this cargo is equal to or less than 0.56 m^3/t, the tank top may be overstressed unless the cargo is evenly spread across the tank top to equalize the weight distribution. Due consideration shall be given to ensure that the tank top is not overstressed during the voyage and during loading by a pile of the cargo.

Precautions
Appropriate action shall be taken to protect machinery and accommodation spaces from the dust of the cargo. Bilge wells of the cargo spaces shall be protected from ingress of the cargo. Due consideration shall be given to protect equipment from the dust of the cargo. Persons who may be exposed to the dust of the cargo shall wear protective clothing, goggles or other equivalent dust eye-protection and dust filter masks, as necessary.

Ventilation
No special requirements.

Carriage
Bilge water shall be removed regularly during the voyage.
The appearance of the surface of this cargo shall be checked regularly during the voyage. If free water above the cargo or fluid state of the cargo is observed during the voyage, the master shall take appropriate actions to prevent cargo shifting and potential capsize of the ship, and give consideration to seeking emergency entry into a place of refuge.

Discharge
No special requirements.

Clean-up
No special requirements.

ZIRCON KYANITE CONCENTRATE

Description
Zircon kyanite concentrate is an odourless and tasteless off-white to brown mixture of the heavy mineral sand processing waste stream (concentrate) and zircon sand. It is used for upgrading mineral sand products such as zircon and kyanite. It is a very heavy cargo.

Characteristics

Physical properties			
Size	**Angle of repose**	**Bulk density (kg/m^3)**	**Stowage factor (m^3/t)**
Fine particles	Not applicable	2,400 to 3,000	0.33 to 0.42
Hazard classification			
Class	**Subsidiary hazard(s)**	**MHB**	**Group**
Not applicable	Not applicable	Not applicable	A

Hazard
This cargo may liquefy if shipped at a moisture content in excess of its transportable moisture limit (TML). See sections 7 and 8 of this Code.
This cargo is non-combustible or has a low fire risk.

Stowage and segregation
No special requirements.

Hold cleanliness
Clean and dry as relevant to the hazards of the cargo.

Weather precautions
When this cargo is carried in a ship other than a ship complying with the requirements in 7.3.2 of this Code, the following provisions shall be complied with:

.1 the moisture content of the cargo shall be kept less than its TML during loading operations and the voyage;

.2 unless expressly provided otherwise in this individual schedule, the cargo shall not be handled during precipitation;

.3 unless expressly provided otherwise in this individual schedule, during handling of the cargo, all non-working hatches of the cargo spaces into which the cargo is loaded, or to be loaded, shall be closed;

.4 the cargo may be handled during precipitation under the conditions stated in the procedures required in 4.3.3 of this Code; and

.5 the cargo in a cargo space may be discharged during precipitation provided that the total amount of the cargo in the cargo space is to be discharged in the port.

Loading
Trim in accordance with the relevant provisions required under sections 4 and 5 of this Code.
As the density of the cargo is extremely high, the tank top may be overstressed unless the cargo is evenly spread across the tank top to equalize the weight distribution. Due consideration shall be given to ensure that the tank top is not overstressed during the voyage and during loading by a pile of the cargo.

Precautions
Bilge wells shall be clean, dry and covered as appropriate, to prevent ingress of the cargo.
The bilge system of a cargo space to which this cargo is to be loaded shall be tested to ensure it is working.

Ventilation
No special requirements.

Carriage
The appearance of the surface of this cargo shall be checked regularly during the voyage.
If free water above the cargo or fluid state of the cargo is observed during the voyage, the master shall take appropriate actions to prevent cargo shifting and potential capsize of the ship, and give consideration to seeking emergency entry into a place of refuge.

Discharge
No special requirements.

Clean-up
No special requirements.

ZIRCONSAND

Description
Usually fine white to yellow, very abrasive extracted from ilmenite sand. May be dusty. Shipped dry.

Characteristics

Physical properties			
Size	**Angle of repose**	**Bulk density (kg/m^3)**	**Stowage factor (m^3/t)**
0.15 mm or less	Not applicable	2,600 to 3,000	0.33 to 0.36
Hazard classification			
Class	**Subsidiary hazard(s)**	**MHB**	**Group**
Not applicable	Not applicable	Not applicable	C

Hazard
No special hazards.
This cargo is non-combustible or has a low fire risk.

Stowage and segregation
No special requirements.

Hold cleanliness
No special requirements.

Weather precautions
This cargo shall be kept as dry as practicable before loading, during loading and during voyage.

This cargo shall not be loaded during precipitation. During loading of this cargo, all non-working hatches of the cargo spaces to which this cargo is loaded, or to be loaded, shall be closed.

Loading
Trim in accordance with the relevant provisions required under sections 4 and 5 of this Code.

As the density of the cargo is extremely high, the tank top may be overstressed unless the cargo is evenly spread across the tank top to equalize the weight distribution. Due consideration shall be given to ensure that the tank top is not overstressed during the voyage and during loading by a pile of the cargo.

Precautions
Bilge wells shall be clean, dry and covered as appropriate, to prevent ingress of the cargo.

Appropriate precautions shall be taken to protect machinery and accommodation spaces from the dust of the cargo. Bilge wells of the cargo spaces shall be protected from ingress of the cargo. Due consideration shall be given to protect equipment from the dust of the cargo. Persons who may be exposed to the dust of the cargo shall wear goggles or other equivalent dust eye-protection and dust filter masks. Those persons shall wear protective clothing, as necessary.

Ventilation
No special requirements.

Carriage
No special requirements.

Discharge
No special requirements.

Clean-up
No special requirements.

APPENDIX 2

LABORATORY TEST PROCEDURES, ASSOCIATED APPARATUS AND STANDARDS

1 Test procedures for materials which may liquefy and associated apparatus

Six methods of testing for the transportable moisture limit are currently in general use:

.1 flow table test;

.2 penetration test; and

.3 Proctor/Fagerberg test.

As each method has its advantages, the selection of the test method should be determined by local practices or by the appropriate authorities.

.4 Modified Proctor/Fagerberg test procedure for iron ore fines;

.5 Modified Proctor/Fagerberg test procedure for coal; and

.6 Modified Proctor/Fagerberg test procedure for bauxite.

1.1 Flow table test procedure

1.1.1 *Scope*

The flow table is generally suitable for mineral concentrates or other fine material with a maximum grain size of 1 mm. It may also be applicable to materials with a maximum grain size up to 7 mm. It will not be suitable for materials coarser than this and may also not give satisfactory results for some materials with high clay content. If the flow table test is not suitable for the material in question, the procedures to be adopted should be those approved by the authority of the port State.

The test described below provides for determination of:

.1 the moisture content of a sample of cargo, hereinafter referred to as the test material;

.2 the flow moisture point (FMP) of the test material under impact or cyclic forces of the flow table apparatus; and

.3 the transportable moisture limit of the test material.

1.1.2 *Apparatus (see figure 1.1.2)*

.1 Standard flow table and frame (ASTM Designation (C230-68) – see 3).

.2 Flow table mounting (ASTM Designation (C230-68) – see 3).

.3 Mould (ASTM Designation (C230-68) – see 3).

.4 Tamper (see figure 1.1.2.4): the required tamping pressure may be achieved by using calibrated, spring-loaded tampers (examples are included in figure 1.1.2.4) or some other suitable design of tamper that allows a controlled pressure to be applied via a 30 mm diameter tamper head.

.5 Scales and weights (ASTM Designation (C109-73) – see 3) and suitable sample containers.

.6 Glass graduated measuring cylinder and burette having capacities of 100-200 m/ and 10 m/, respectively.

.7 A hemispherical mixing bowl approximately 30 cm diameter, rubber gloves and drying dishes or pans. Alternatively, an automatic mixer of similar capacity can be used for the mixing operations. In this case, care should be exercised to ensure that the use of such a mechanical mixer does not reduce the particle size or consistency of the test material.

.8 A drying oven with controlled temperature up to approximately 110°C. This oven should be without air circulation.

Figure 1.1.2 – ***Flow table and accessory apparatus***

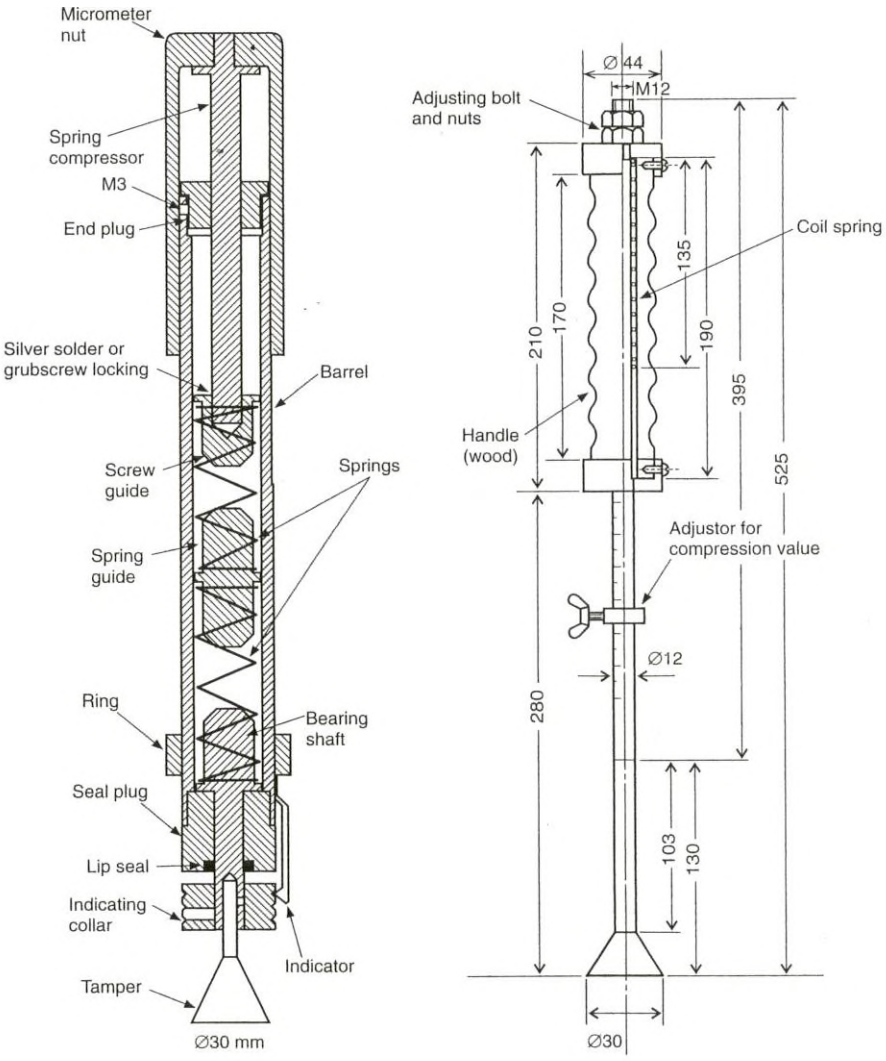

Figure 1.1.2.4 – ***Examples of spring-loaded tampers***

1.1.3 *Temperature and humidity*

It is preferable to work in a room where the samples will be protected from excessive temperatures, air currents and humidity variations. All phases of the material preparation and testing procedure should be accomplished in a reasonable space of time to minimize moisture losses and, in any event, within the day of commencement. Where possible, sample containers should be covered with plastic film or other suitable cover.

1.1.4 *Procedure*

The quantity of material required for a flow moisture test will vary according to the specific gravity of the material to be tested. It will range from approximately 2 kg for coal to 3 kg for mineral concentrates. It should be collected as a representative sample of the cargo being shipped. Experience has shown that more accurate test results will be obtained by ensuring that the moisture content of the test sample is increased rather than decreased towards the FMP.

Consequently, it is recommended that a preliminary flow moisture test should be conducted, generally in accordance with the following, to indicate the condition of the test sample, i.e. the quantity of water and the rate at which it is to be added or whether the sample should be air-dried to reduce its moisture content before commencing the main flow moisture test.

1.1.4.1 *Preparation of the test sample*

The representative sample of test material is placed in the mixing bowl and thoroughly mixed. Three subsamples (A), (B) and (C) are removed from the mixing bowl as follows: about one fifth of the sample (A) should be immediately weighed and placed in the drying oven to determine the moisture content of the sample "as-received". Two further subsamples, each of about two fifths of the gross weight, should then be taken, one (B) for the preliminary FMP test and the other (C) for the main FMP determination:

.1 *Filling the mould*. The mould is placed on the centre of the flow table and filled in three stages with the material from the mixing bowl. The first charge, after tamping, should aim to fill the mould to approximately one third of its depth. The quantity of sample required to achieve this will vary from one material to another, but can readily be established after some experience has been gained of the packing characteristics of the material being tested.

The second charge, after tamping, should fill the mould to about two thirds of its depth and the third and final charge, after tamping, should reach to just below the top of the mould (see figure 1.1.4-2).

.2 *Tamping procedure*. The aim of tamping is to attain a degree of compaction similar to that prevailing at the bottom of a shipboard cargo of the material being tested. The correct pressure to be applied is calculated from:

Tamping pressure (Pa) = Bulk density of cargo (kg/m^3)
x Maximum depth of cargo (m)
x Gravity acceleration (m/s^2)

Bulk density can be measured by a single test, using the Proctor C apparatus described in ASTM Standard D-698 or JIS-A-1210, on a sample of the cargo at the proposed moisture content of loading.

When calculating the tamping pressure, if no information concerning cargo depth is available the maximum likely depth should be used.

Alternatively, the pressure may be estimated from table 1.1.4.1.

The number of tamping actions (applying the correct, steady pressure each time) should be about 35 for the bottom layer, 25 for the middle and 20 for the top layer, tamping successively over the area completely to the edges of the sample to achieve a uniformly flat surface for each layer.

.3 *Removal of the mould*. The mould is tapped on its side until it becomes loose, leaving the sample in the shape of a truncated cone on the table.

Table 1.1.4.1

Typical cargo	**Bulk density (kg/m^3)**	**Maximum cargo depth**			
		2 m	**5 m**	**10 m**	**20 m**
		← Tamper pressure (kPa) →			
Coal	1,000	20 (1.4)	50 (3.5)	100 (7.1)	200 (14.1)
	2,000	40 (2.8)	100 (7.1)	200 (14.1)	400 (28.3)
Metal ore	3,000	60 (4.2)	150 (10.6)	300 (21.2)	600 (42.4)
Iron ore concentrate	4,000	80 (5.7)	200 (14.1)	400 (28.3)	800 (56.5)
Lead ore concentrate	5,000	100 (7.1)	250 (17.7)	500 (35.3)	1,000 (70.7)
(values in parenthesis are equivalent kgf when applied via a 30 mm diameter tamper head)					

1.1.4.2 *The preliminary flow moisture test*

.1 Immediately after removing the mould, the flow table is raised and dropped up to 50 times through a height of 12.5 mm at a rate of 25 times per min. If the material is below the FMP, it usually crumbles and bumps off in fragments with successive drops of the table (see figure 1.1.4-3).

.2 At this stage, the flow table is stopped and the material returned to the mixing bowl, where 5-10 m*l* of water, or possibly more, is sprinkled over the surface and thoroughly mixed into the material, either with rubber-gloved fingers or an automatic mixer.

The mould is again filled and the flow table is operated as described in 1.1.4.2.1 for up to 50 drops. If a flow state is not developed, the process is repeated with further additions of water until a flow state has been reached.

.3 *Identification of a flow state*. The impacting action of the flow table causes the grains to rearrange themselves to produce compaction of the mass. As a result, the fixed volume of moisture contained in the material at any given

level increases as a percentage of the total volume. A flow state is considered to have been reached when the moisture content and compaction of the sample produce a level of saturation such that plastic deformation occurs.* At this stage, the moulded sides of the sample may deform, giving a convex or concave profile (see figure 1.1.4-4).

With repeated action of the flow table, the sample continues to slump and to flow outwards. In certain materials, cracks may also develop on the top surface. Cracking, with the appearance of free moisture, is not, however, an indication of development of a flow state. In most cases, measurement of the deformation is helpful in deciding whether or not plastic flow has occurred. A template which, for example, will indicate an increase in diameter of up to 3 mm in any part of the cone is a useful guide for this purpose. Some additional observations may be useful. For example: when the (increasing) moisture content is approaching the FMP, the sample cone begins to show a tendency to stick to the mould. Further, when the sample is pushed off the table, the sample may leave tracks (stripes) of moisture on the table. If such stripes are seen, the moisture content may be above the FMP: the absence of tracks (stripes) is not necessarily an indication of being below the FMP.

Measuring the diameter of the cone, at the base or at half height, will always be useful. By addition of water in increments of 0.4% to 0.5% and applying 25 drops of the flow table, the first diameter increase will generally be between 1 and 5 mm and after a further increment of water the base diameter will have expanded by between 5 and 10 mm.

.4 As an alternative to the procedure described above, for many concentrates a fast way of finding the approximate FMP is as follows:

When the moisture content is definitely beyond the FMP, measure the diameter after 25 drops, repeat the test after adding a further increment of water, measure the diameter and draw a diagram as illustrated in figure 1.1.4-1, showing increase in diameter plotted against moisture content. A straight line drawn through the two points will cross the moisture content axis close to the FMP.

Having completed the preliminary FMP test, the sample for the main test is adjusted to the required level of moisture content (about 1% to 2%) below the flow point.

* In certain conditions, the diameter of the cone may increase before the flow moisture point is reached, due to low friction between the grains rather than to plastic flow. This must not be mistaken for a flow state.

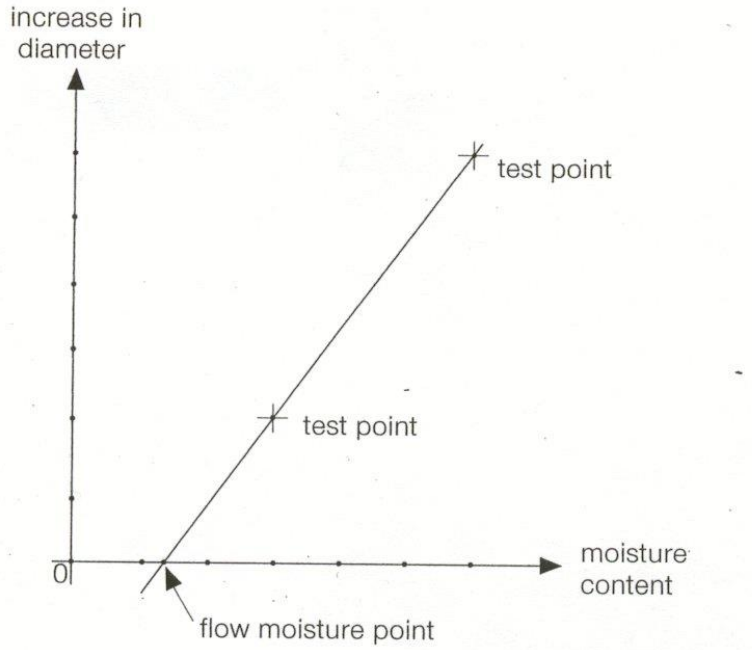

Figure 1.1.4-1

Figure 1.1.4-2

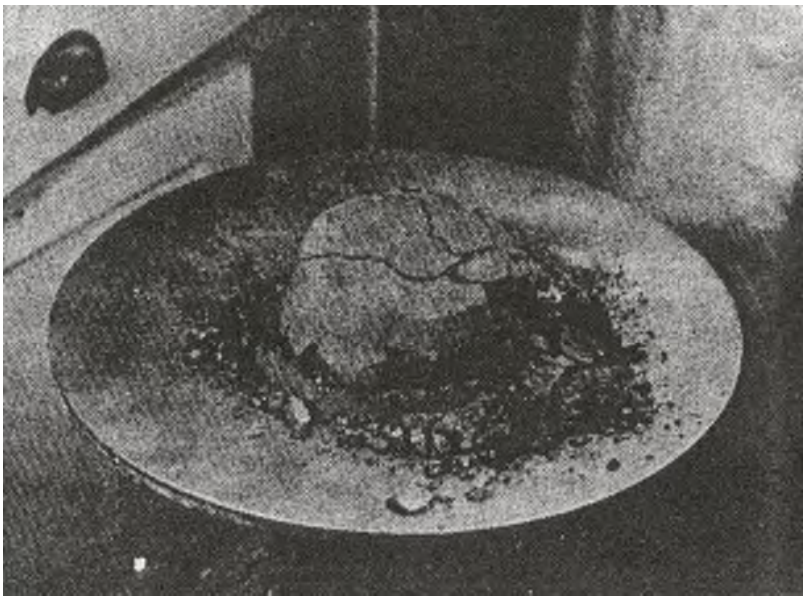

Figure 1.1.4-3

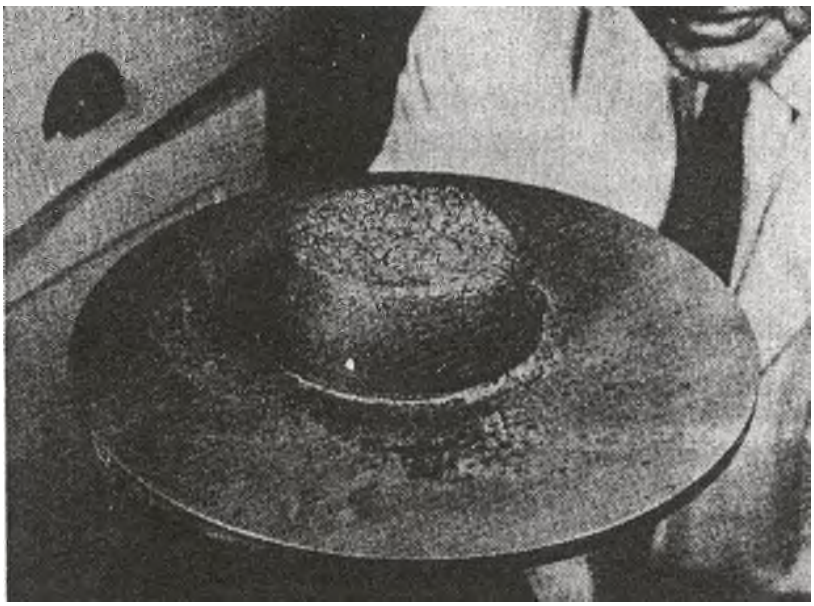

Figure 1.1.4-4

1.1.4.3 *Main flow moisture test*

When a flow state has been reached in the preliminary test, the moisture content of subsample (C) is adjusted to about 1% to 2% less than the last value which did not cause flow in the preliminary test (this is suggested simply to avoid starting the main test too close to the FMP and then having to waste time air-drying it and starting again). The final test is then carried out on this adjusted sample in the same manner as for the preliminary test, but in this case with the addition of water in increments of no more than 0.5% of the mass of the test material (the lower the "preliminary" FMP, the smaller the increments should be). After each stage, the whole moulded sample should be placed in a container, weighed immediately and retained for moisture determination if required. This will be necessary if the sample flowed or if the next, slightly wetter, sample flows. If not required, it may be returned to the mixing bowl.

When a flow state has been reached, the moisture content should be determined on two samples, one with moisture content just above the FMP and the other with moisture content just below the FMP. The difference between the two values should then be 0.5% or less, and the FMP is taken as the mean of these two values.

1.1.4.4 *Determination of moisture content*

Introduction

It should be noted that, for many materials, there are recognized international and national methods for determining moisture content. These methods, or ones that have been established to give equivalent results, should be followed.

Concentrates and similar materials

It is clearly important that the samples should be dried to a constant mass. In practice, this is ascertained after a suitable drying period at 105ºC by weighing the sample successively with an interval of several hours elapsing. If the mass remains constant, drying has been completed, whereas if the mass is still decreasing, drying should be continued.

The length of the drying period depends upon many variables, such as the disposition of the material in the oven, the type of container used, the particle size, the rate of heat transfer, etc. It may be that a period of five hours is ample for one concentrate sample, whereas it is not sufficient for another. Sulphide concentrates tend to oxidize, and therefore the use of drying ovens with air circulation systems is not recommended for these materials, nor should the test sample be left in the drying oven for more than four hours.

Coal

The recommended methods for determination of the moisture content are those described in ISO 589-1974, "Hard Coal – Determination of Total Moisture". This method, or ones that have been established to give equivalent results, should be followed.

Calculation of moisture content, FMP and transportable moisture limit:

Taking m_1 as the exact mass of the subsample "as-received" (see 1.1.4.1),

Taking m_2 as the exact mass of the "as-received" subsample, after drying,

Taking m_3 as the exact mass of the sample just above the flow state (see 1.1.4.3),

Taking m_4 as the exact mass of the sample just above the flow state, after drying,

Taking m_5 as the exact mass of the sample just below the flow state (see 1.1.4.3),

Taking m_6 as the exact mass of the sample just below the flow state, after drying,

Then:

.1 The moisture content of the concentrate "as-received" is:

$$\frac{(m_1 - m_2)}{m_1} \times 100, \; in\ per\,cent \qquad (1.1.4.4.1)$$

.2 The FMP of the material is:

$$\frac{\frac{(m_3 - m_4)}{m_3} + \frac{m_5 - m_6}{m_5}}{2} \times 100, \textit{ in per cent} \qquad (1.1.4.4.2)$$

.3 The transportable moisture limit of the material is 90% of the FMP.

Peat moss

For all peat moss, determine the bulk density, using either the ASTM or CEN (20 L) method.

Peat should be above or below 90 kg/m^3 on a dry weight basis in order to obtain the correct TML.

As indicated in 1.1.1, the following should be determined:

.1 the moisture content of a sample of cargo (MC);

.2 the flow moisture point (FMP);

.3 the transportable moisture limit (TML). The TML will be determined as follows:

.3.1 for peat with a bulk density of greater than 90 kg/ m^3 on a dry weight, the TML is 85% of the FMP; and

.3.2 for peat with a bulk density of 90 kg/ m^3 or less on a dry weight, the TML is 90% of the FMP.

1.2 *Penetration test procedure*

The penetration test constitutes a procedure whereby a material in a cylindrical vessel is vibrated. The flow moisture point is determined on the basis of the penetration depth of an indicator.

1.2.1 *Scope*

.1 The penetration test is generally suitable for mineral concentrates, similar materials and coals up to a top size of 25 mm.

.2 In this procedure, the sample, in a cylindrical vessel, is subjected to vertical vibration of 2 *g* rms $\pm$ 10% (*g* = gravity acceleration) for 6 min. When the penetration depth of a bit put on the surface exceeds 50 mm, it is judged that the sample contains a moisture content greater than the flow moisture point.

.3 This procedure consists of a preliminary test to get an approximate value of the flow moisture point and a main test to determine the accurate flow moisture point. When the approximate value of the flow moisture point is known, the preliminary test can be omitted.

.4 The room where the samples are tested should be prepared as mentioned in 1.1.3.

1.2.2 *Apparatus (see figure 1.2.2)*

.1 The test apparatus consists of:

.1 a vibrating table;

.2 cylindrical vessels;

.3 indicators (penetration bits and a holder);

.4 a tamper (see 1.1.2.4); and

.5 ancillary equipment (see 1.1.2.5 to .8).

.2 The vibrator (see figure 1.2.2.2), with a table on which a cylindrical vessel can be clamped, should be capable of exciting a mass of 30 kg at a frequency of either 50 Hz or 60 Hz with an acceleration of 3 *g* rms or more, and it can be controlled to adjust the acceleration level.

.3 Dimensions of cylindrical vessels (see figures 1.2.2.3-1 and 1.2.2.3-2) are as follows:

Cylinder size	Inner diameter	Depth	Wall thickness
small	146 mm	202 mm	9.6 mm or more
large	194 mm	252 mm	10.3 mm or more

The vessels should be made of reasonably rigid, non-magnetic, impermeable and lightweight material such as acrylics or vinyl chloride.

The small cylindrical vessel is selected for the materials having a maximum particle size of 10 mm or less. The large cylindrical vessel is for those having a maximum particle size of 25 mm or less.

.4 Penetration bits (see figure 1.2.2.4) are made of brass. The mass of the bit for coal should be adjusted to 88 g (5 kPa), and that for concentrates to 177 g (10 kPa). When the sample contains coarse particles, it is recommended that two bits of the same pressure are put on the surface to avoid misjudgment.

.5 A holder (see figure 1.2.2.5) should be made to guide the rod of a bit with minimum friction to the centre of a cylindrical vessel. When two bits are used, they should be positioned in accordance with figure 1.2.2.

.6 A cylindrical vessel and penetration indicators should be selected in accordance with the nature and condition of the test sample, namely size of particles and bulk density.

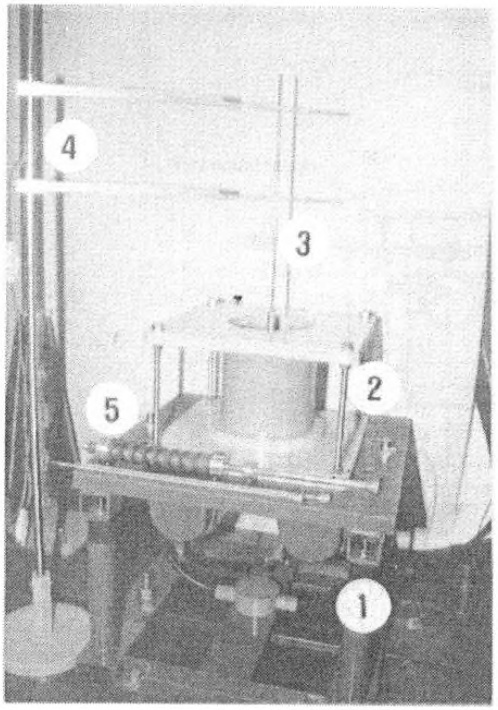

① Vibration table

② Cylindrical vessel (150 mm diameter)

③ Penetration bit (10 kPa)

④ Bit holder

⑤ Tamper

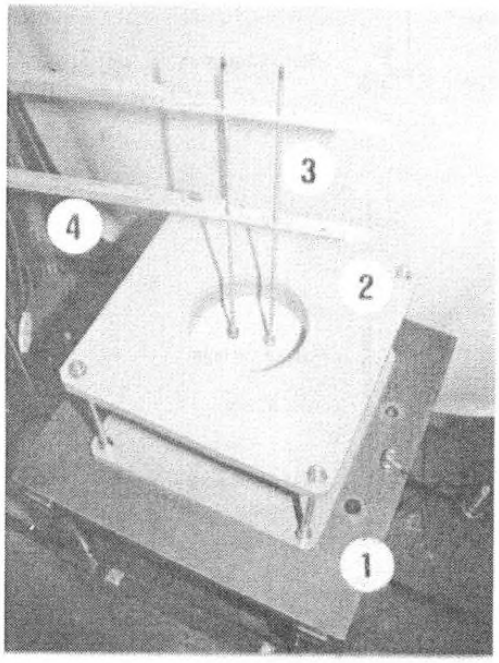

① Vibration table

② Cylindrical vessel (150 mm diameter)

③ Penetration bit (5 kPa)

④ Bit holder

Figure 1.2.2 – *Test apparatus*

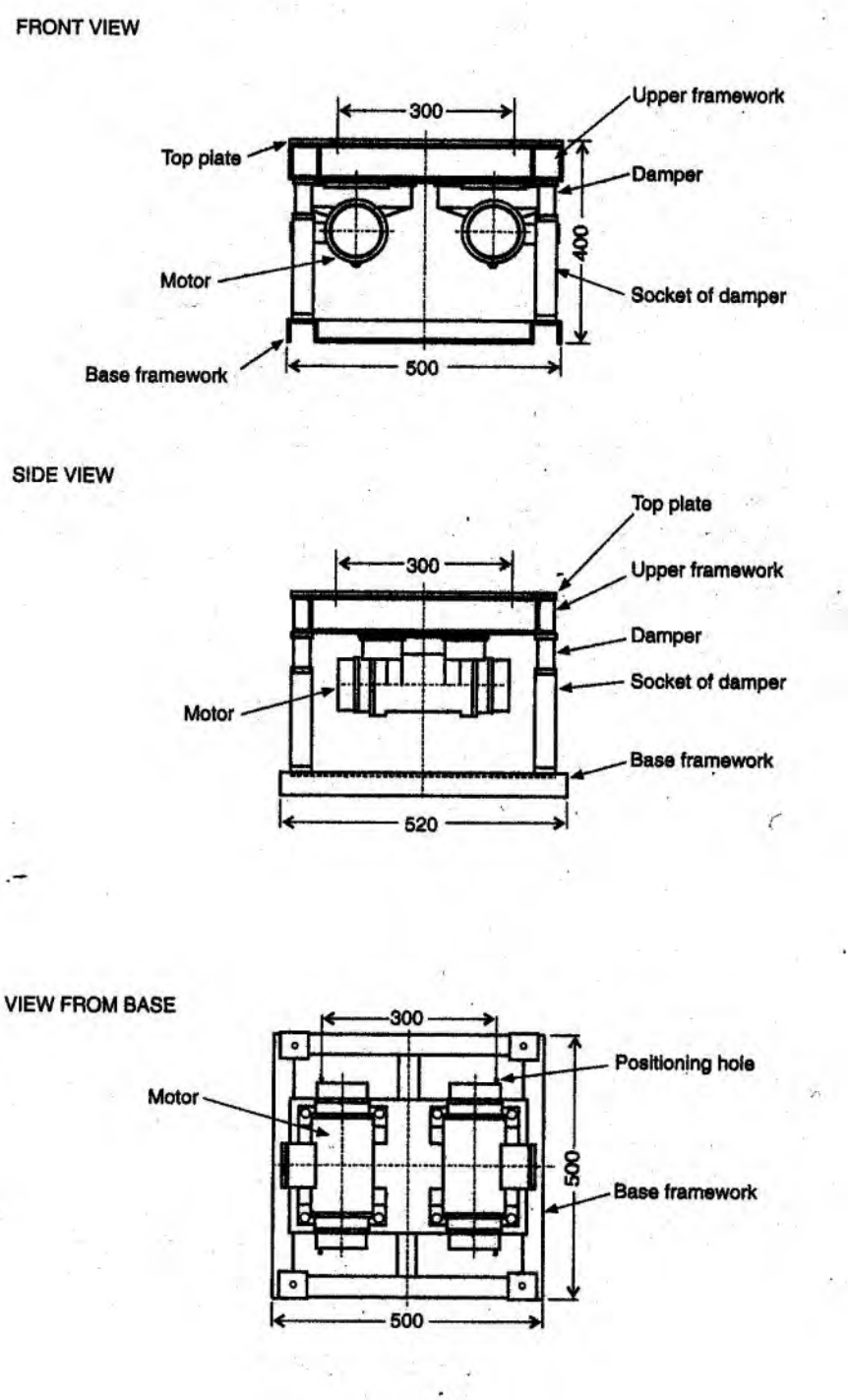

Figure 1.2.2.2 – *Vibration table*

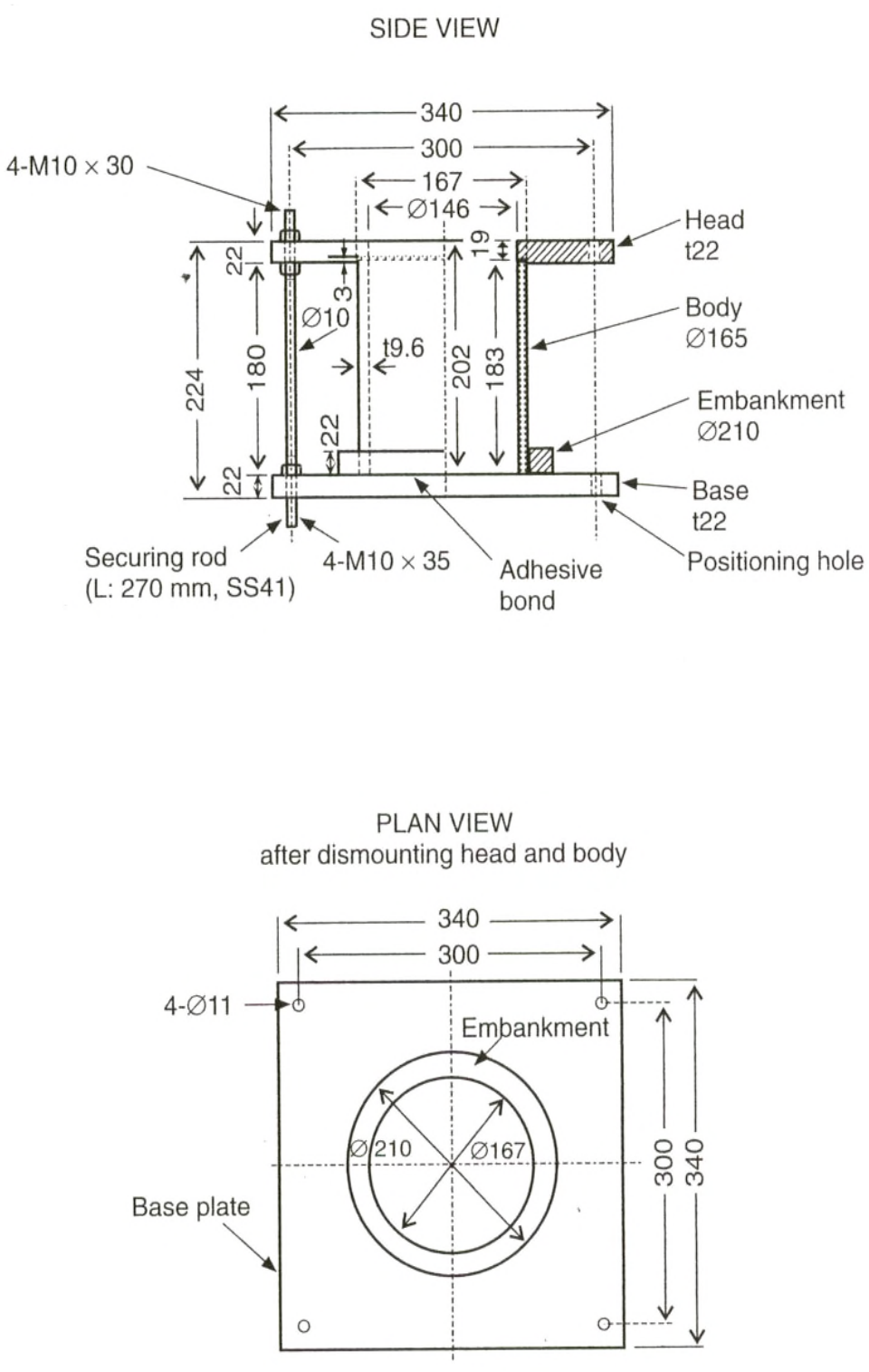

Figure 1.2.2.3-1 – ***Cylindrical vessel, 150 mm diameter***

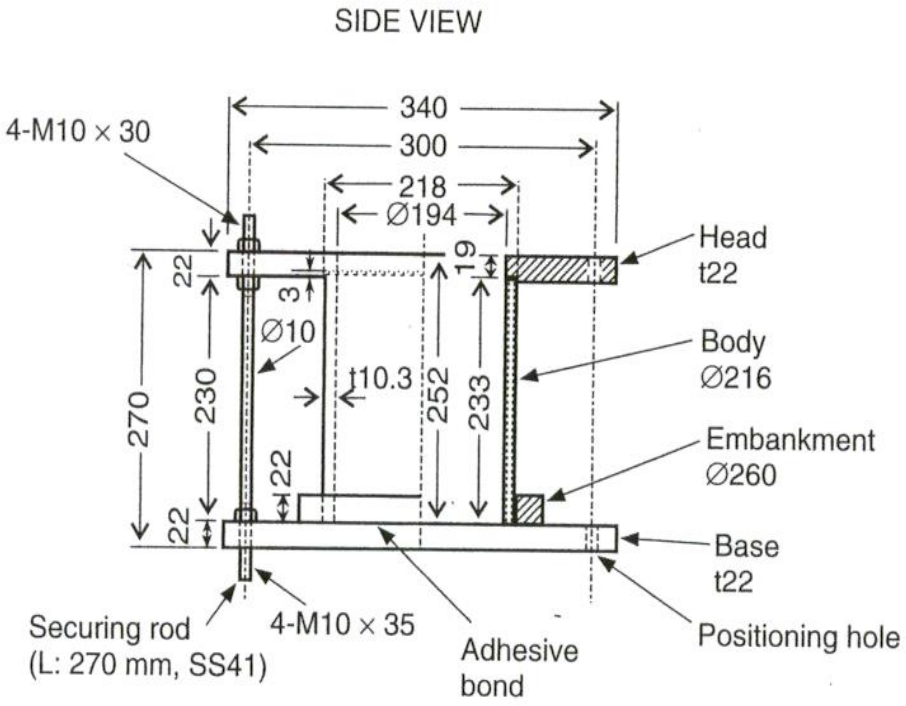

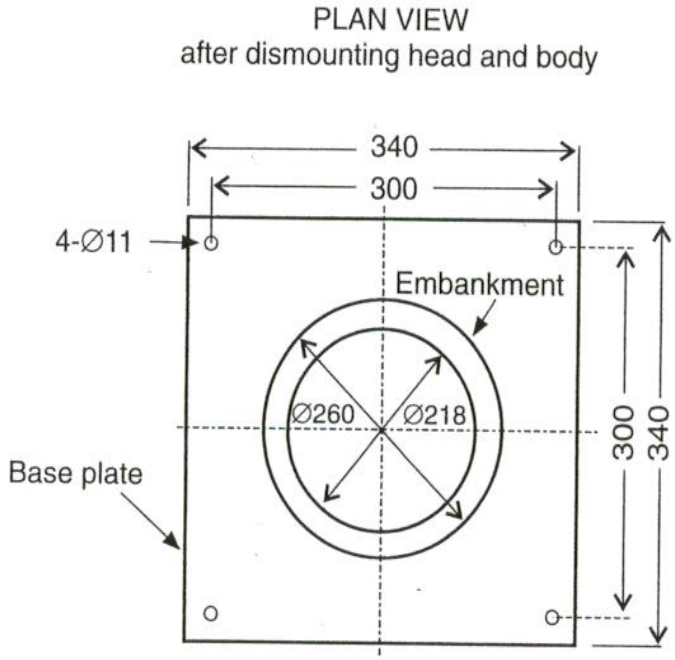

Figure 1.2.2.3-2 – ***Cylindrical vessel, 200 mm diameter***

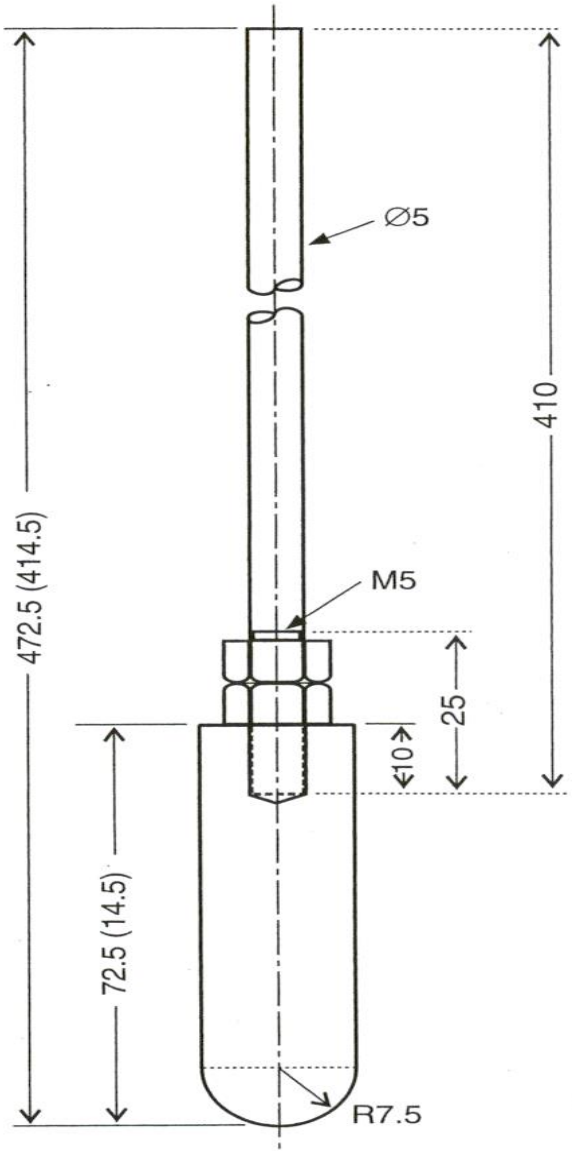

(Dimensions indicated in brackets are of the 5 kPa bit)
(unit: mm)

Figure 1.2.2.4 – *Penetration bit*

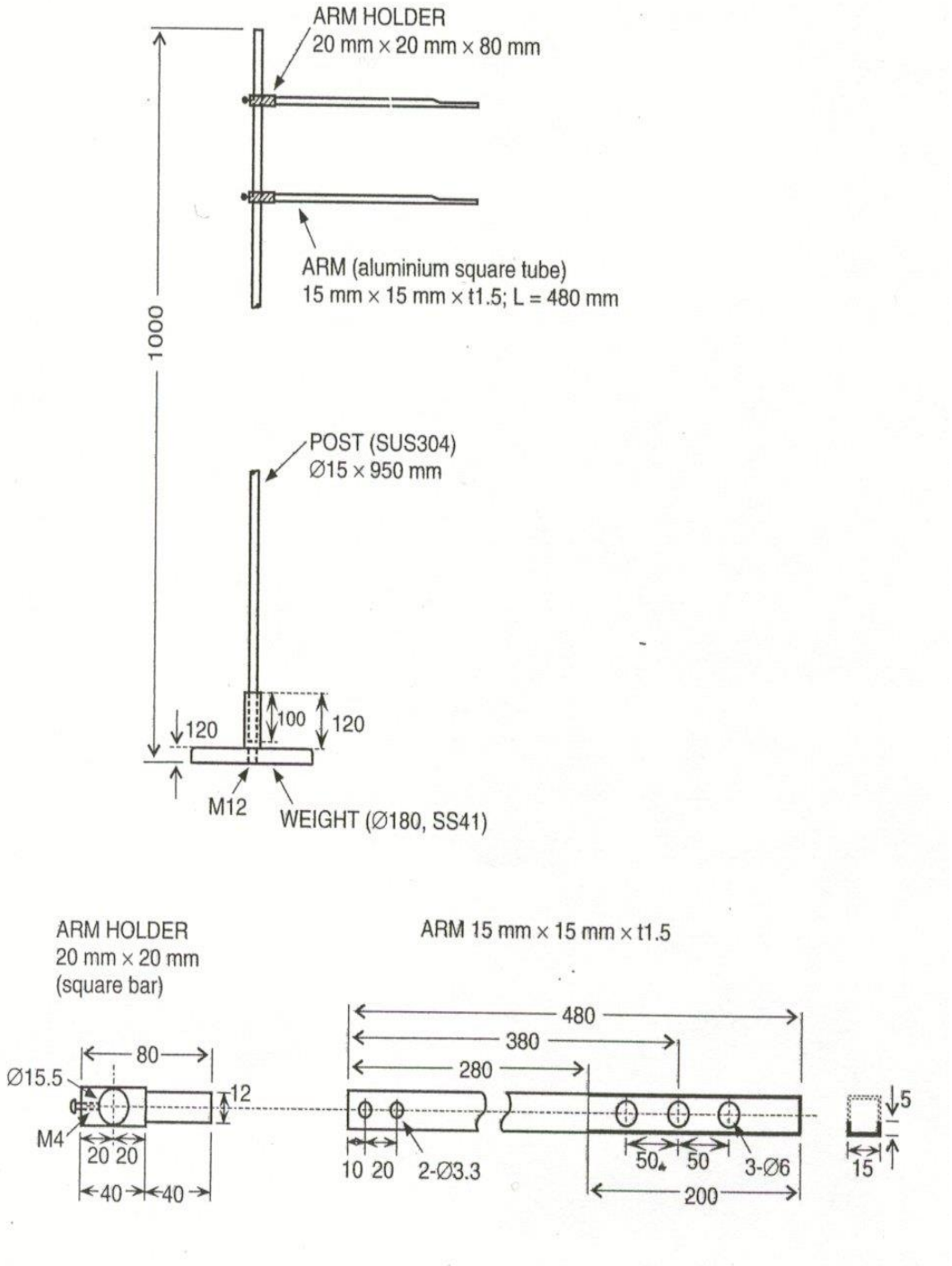

Figure 1.2.2.5 – *Bit holder*

1.2.3 *Procedure*

1.2.3.1 *Preparation of the test sample and the vibrating table*

.1 The quantity of the sample required is approximately six times or more the capacity of the selected cylindrical vessel. The amount of representative test sample with which each container is filled should be as follows: approximately 1,700 cm^3 for the small container, and 4,700 cm^3 for the large container.

.2 Mix the sample well and divide into three approximately equal subsamples, namely (A), (B) and (C). The subsample (A) should be immediately weighed and placed in the drying oven to determine the moisture content of the sample "as-received".

The subsamples (B) and (C) are used for the preliminary test and the main test, respectively.

.3 The vibration level of the vibrating table should be calibrated, using an acceleration meter, prior to carrying out testing. The acceleration of the table should be adjusted to 2 *g* rms $\pm$ 10% with a container filled with a sample mounted on the table.

1.2.3.2 *Preliminary flow moisture test*

This test is intended to measure quickly the approximate flow moisture point, using subsample (B). Water is added in increments after every penetration test. When a flow state has been reached, the moisture content of the sample just above the flow state is measured. The moisture content of the sample just below the flow state can be calculated by deducting the increment of water last added from the gross mass of the sample.

.1 Fill the appropriate cylindrical vessel with subsample (B) in four distinct stages and tamp after the addition of each layer using a specified tamper. Tamp to a pressure denoted in 1.1.4.1 for mineral concentrates or to 40 kPa for coals, and apply the pressure evenly over the whole surface area of the material until a uniformly flat surface is obtained.

.2 Place the penetration bit on the surface of the material through the holder.

.3 Operate the vibrator at a frequency of 50 Hz or 60 Hz with an acceleration of 2 *g* rms $\pm$ 10% for 6 min. If necessary, the acceleration level should be checked by referring to the output of the acceleration meter attached to the vibrating table.

.4 After 6 min of vibration, read the depth of penetration.

.5 When the depth of penetration is less than 50 mm, it is judged that liquefaction did not take place. Then:

.1 Remove the material from the cylindrical vessel and replace in the mixing bowl with the remainder of the sample.

.2 Mix well and weigh the contents of the mixing bowl.

.3 Sprinkle an increment of water of not more than 1% of the mass of the material in the bowl and mix well.

.4 Repeat the procedure described in 1.2.3.2.1 to 1.2.3.2.5.

.6 When the depth of penetration is greater than 50 mm, it is judged that liquefaction took place. Then:

.1 Remove the material from the cylindrical vessel and replace in the mixing bowl.

.2 Measure the moisture content in accordance with the procedure described in 1.1.4.4.

.3 Calculate the moisture content of the sample just below the flow moisture point on the basis of the amount of water added.

.7 If the penetration depth in the first attempt exceeds 50 mm, i.e. the sample as-received liquefied, mix subsamples (B) and (C) and dry at room temperature to reduce the moisture. Then, divide the material into two subsamples (B) and (C), and repeat the preliminary test.

1.2.3.3 *The main flow moisture test*

.1 On the basis of the preliminary test, the main test should be carried out to determine the flow moisture point more accurately.

.2 Adjust the moisture content of the subsample (C) to the last value, which did not cause flow in the preliminary flow moisture test.

.3 The first test of the main flow moisture test is carried out on this adjusted sample in the same manner as described in 1.2.3.2. In this case, however, the addition of water in increments should not be more than 0.5% of the mass of the test material.

.4 When the approximate value of the flow moisture point is known in advance, the moisture content of the subsample (C) is adjusted to approximately 90% of this value.

.5 When a flow state has been reached, the flow moisture point is determined as described in 1.1.4.3.

1.3 *Proctor/Fagerberg test procedure*

1.3.1 *Scope*

.1 Test method for both fine and relatively coarse-grained ore concentrates or similar materials up to a top size of 5 mm. This method should not be used for coal or other porous materials.

.2 Before the Proctor/Fagerberg test is applied to coarser materials with a top size greater than 5 mm, an extensive investigation for adoption and improvement is required.

.3 The transportable moisture limit (TML) of a cargo is taken as equal to the critical moisture content at 70% degree of saturation according to the Proctor/Fagerberg method test.

1.3.2 *Proctor/Fagerberg test equipment*

.1 The Proctor apparatus (see figure 1.3.2) consists of a cylindrical iron mould with a removable extension piece (the compaction cylinder) and a compaction tool guided by a pipe open at its lower end (the compaction hammer).

.2 Scales and weights (see 3.2) and suitable sample containers.

.3 A drying oven with a controlled temperature interval from 100° C to maximum 105°C. This oven should be without air circulation.

.4 A suitable mixer. Care should be taken to ensure that the use of the mixer does not reduce the particle size or consistency of the test material.

.5 Equipment to determine the density of the solid material, for example a pycnometer.

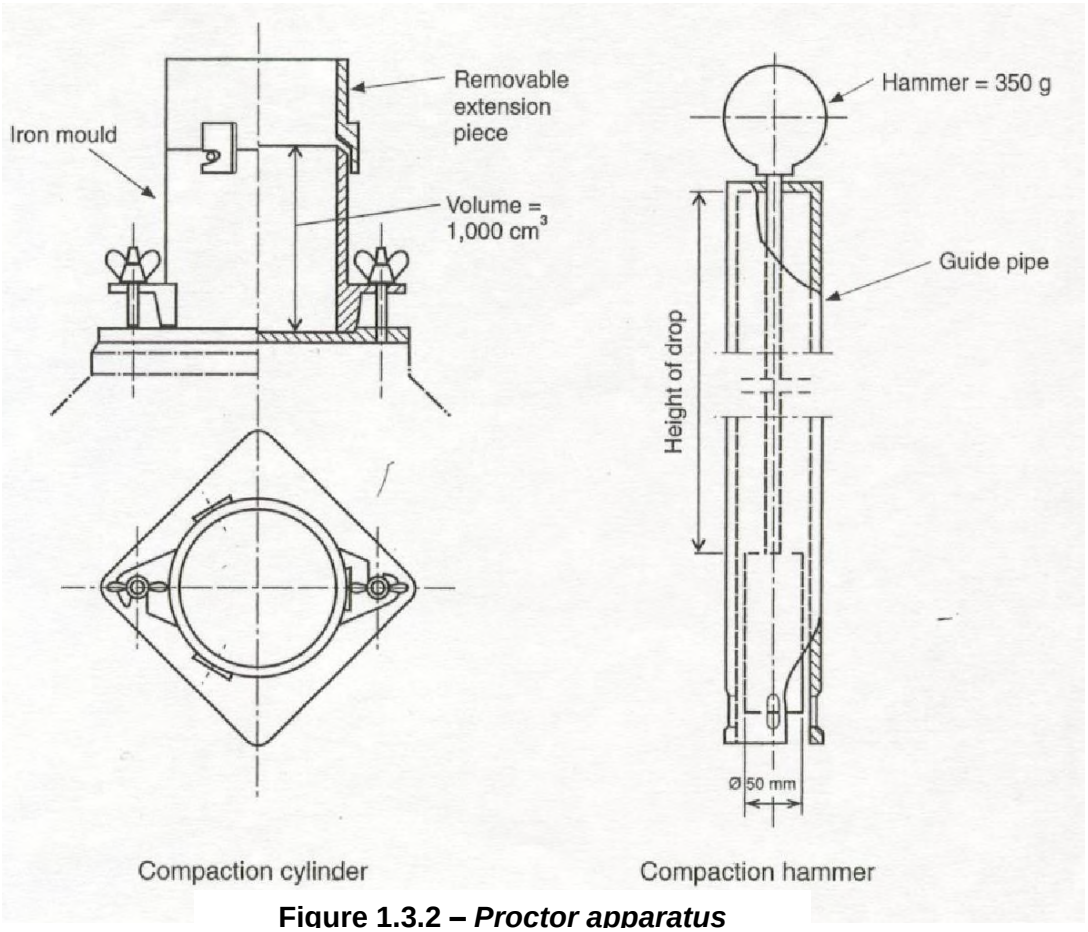

Figure 1.3.2 – *Proctor apparatus*

1.3.3 *Temperature and humidity (see 1.1.3)*

1.3.4 *Procedure*

.1 *Establishment of a complete compaction curve*. A representative sample according to a relevant standard (see 4.7 of this Code) of the test material is dried at a temperature of approximately 100°C. The total quantity of the test material should be at least three times as big as required for the complete test sequence. Compaction tests are executed for 5 to 10 different moisture contents (5 to 10 separate tests). The samples are adjusted in order that dry to almost saturated (plastic) samples are obtained. The required quantity per compaction test is about 2,000 cm^3.

At each compaction test a suitable amount of water is added to the sample of the dried test material and mixed thoroughly for 5 min. Approximately one fifth of the mixed sample is filled into the mould and levelled and then the increment is tamped uniformly over the surface of the increment. Tamping is executed by dropping the hammer 25 times through the guide pipe, 0.2 m each time. The performance is repeated for all five layers. When the last layer has been tamped, the extension piece is removed and the sample is levelled off along the brim of the mould. When the weight of the cylinder with the tamped sample has been determined, the cylinder is emptied, the sample is dried and the weight is determined.

The test then is repeated for the other samples with different moisture contents.

.2 *Definitions and data for calculations (see figure 1.3.4.2)*

- empty cylinder, mass in grams: *A*
- cylinder with tamped sample, mass in grams: *B*
- wet sample, mass in grams: *C*

$$C = B - A$$

- dry sample, mass in grams: D
- water, mass in grams (equivalent to volume in cm^3): E

$$E = C - D$$

Volume of cylinder: 1,000 cm^3

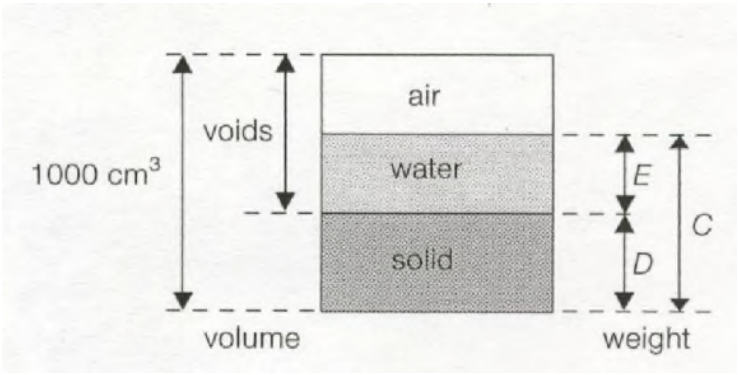

Figure 1.3.4.2

.3 *Calculation of main characteristics*

- density of solid material, g/cm^3 (t/m^3): *d*
- dry bulk density, g/cm^3 (t/m^3): γ

$$\gamma = \frac{D}{1{,}000}$$

- net water content, volume %: e_v

$$e_v = \frac{E}{D} \times 100 \times d$$

- void ratio: e (volume of voids divided by volume of solids)

$$e = \frac{1{,}000\,d - D}{D} = \frac{d}{\gamma} - 1$$

- degree of saturation, percentage by volume: *S*

$$S = \frac{e_v}{e}$$

- gross water content, percentage by mass: W^1

$$W^1 = \frac{E}{C} \times 100$$

- net water content, percentage by mass: *W*

$$W = \frac{E}{D} \times 100$$

.4 *Presentation of the compaction tests*

For each compaction test the calculated void ratio (*e*) value is plotted as the ordinate in a diagram with net water content (e_v) and degree of saturation (*S*) as the respective abscissa parameters.

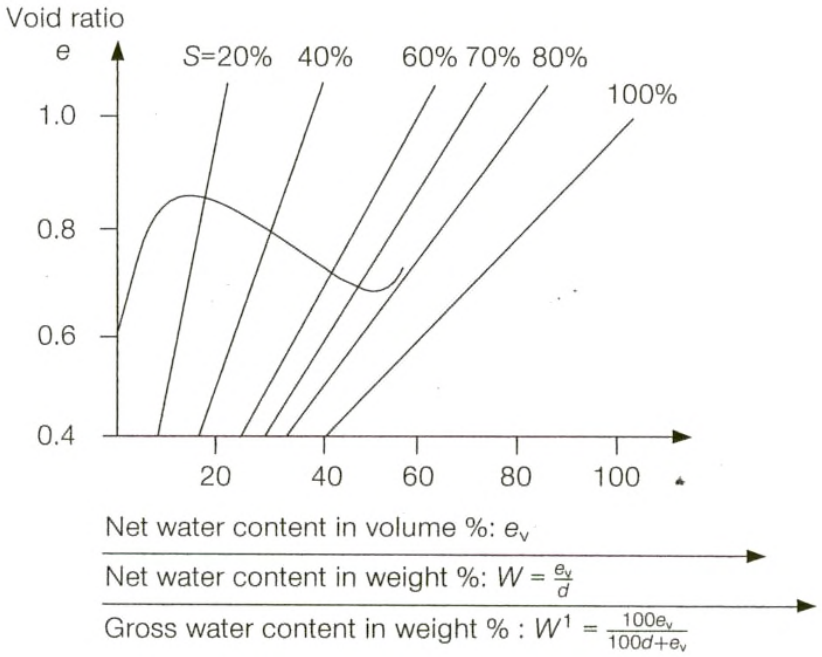

Figure 1.3.4.5

.5 *Compaction curve*

The test sequence results in a specific compaction curve (see figure 1.3.4.5).

The critical moisture content is indicated by the intersection of the compaction curve and the line *S* = 70% degree of saturation. The transportable moisture limit (TML) is the critical moisture content.

1.4 Modified Proctor/Fagerberg test procedure for iron ore fines

1.4.1 *Scope*

.1 The test procedure specified in this section (this test) should only be used for determining transportable moisture limit (TML) of iron ore fines. See individual schedule for iron ore fines.

.2 Iron ore fines is iron ore containing both:

.1 10% or more of fine particles less than 1 mm; and

.2 50% or more of particles less than 10 mm.

.3 The TML of iron ore fines is taken as equal to the critical moisture content at 80% degree of saturation according to the modified Proctor/Fagerberg method test.

.4 The test procedure is applicable when the degree of saturation corresponding to optimum moisture content (OMC) is 90% or higher.

1.4.2 *Modified Proctor/Fagerberg test equipment*

.1 The Proctor apparatus (see figure 1.4.1) consists of a cylindrical iron mould with a removable extension piece (the compaction cylinder) and a compaction tool guided by a pipe open at its lower end (the compaction hammer).

.2 Scales and weights (see 3.2) and suitable sample containers.

.3 A drying oven with a controlled temperature interval from 100°C to maximum 105°C.

.4 A container for hand mixing. Care should be taken to ensure that the mixing process does not reduce the particle size by breakage or increase the particle size by agglomeration or consistency of the test material.

.5 A gas or water pycnometry equipment to determine the density of the solid material as per a recognized standard (e.g. ASTM D5550, AS1289, etc.)

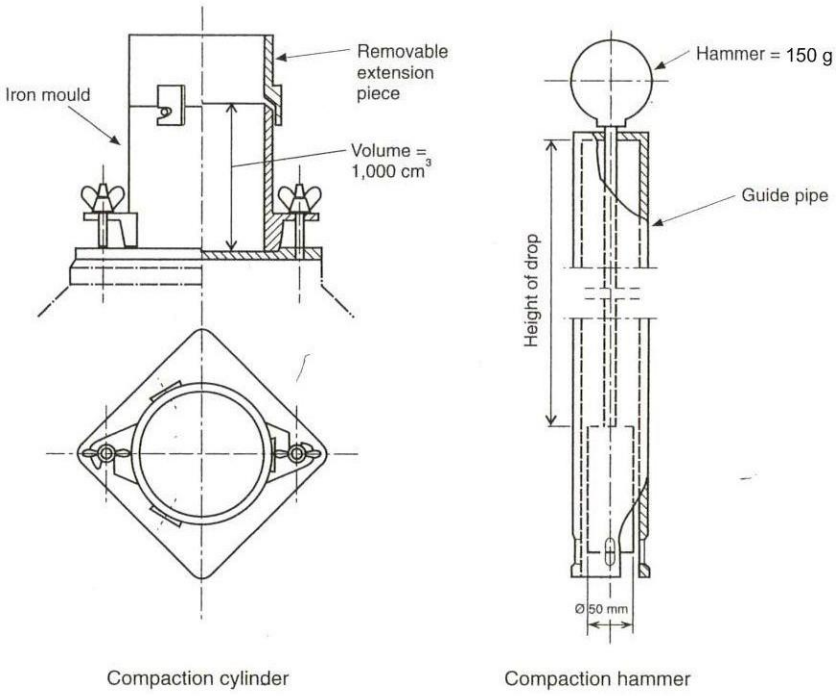

Figure 1.4.1

1.4.3 Temperature and humidity

(see 1.1.3)

1.4.4 Procedure

.1 Establishment of a complete compaction curve

A representative sample according to a relevant standard (see 4.7 of this Code) of the test material is partially dried at a temperature of approximately 60°C or less to reduce the sample's moisture to suitable starting moisture, if needed. The representative sample for this test should not be fully dried, except in case of moisture content measurement.

The total quantity of the test material should be at least three times as big as required for the complete test sequence. Compaction tests are executed for five to ten different moisture contents (5 to 10 separate tests). The samples are adjusted in order that partially dry to almost saturated samples are obtained. The required quantity per compaction test is about 2,000 cm^3.

At each compaction test a suitable amount of water is added to the sample of the test material. The sample material is gently mixed before being allowed to rest and equilibrate. Approximately one fifth of the mixed sample is filled into the mould and levelled and then the increment is tamped uniformly over the surface of the increment. Tamping is executed by dropping a 150 g hammer 25 times through the guide pipe, 0.15 m each time. The performance is repeated for all five layers. When the last layer has been tamped, the extension piece is removed and the sample is levelled off along the brim of the mould with care, ensuring to remove any large particles that may hinder levelling of the sample, replacing them with material contained in the extension piece and re-levelling.

When the weight of the cylinder with the tamped sample has been determined, the cylinder is emptied, the sample is dried at 105ºC and the weight is determined. Reference is made to ISO 3087:2011 "Iron ores – Determination of the moisture content of a lot". The test then is repeated for the other samples with different moisture contents.

Density of solid material should be measured using a gas or water pycnometry equipment according to internationally or nationally accepted standard, e.g. ASTM D5550 and AS 1289 (see 1.4.2.5).

.2 Definitions and data for calculations (see figure 1.4.2)

- empty cylinder, mass in grams: *A*
- cylinder with tamped sample, mass in grams: *B*
- wet sample, mass in grams: *C*

  $C = B - A$
- dry sample, mass in grams: *D*
- water, mass in grams (equivalent to volume in cm^3): *E*

  $E = C - D$

  Volume of cylinder: 1,000 cm^3

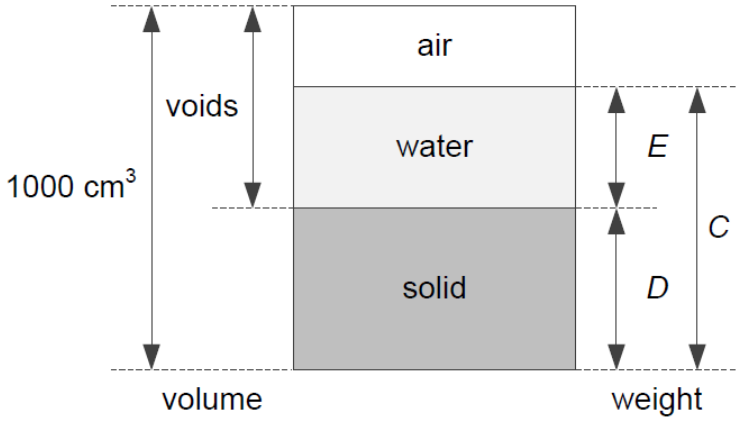

Figure 1.4.2

.3 Calculation of main characteristics

- density of solid material, g/cm^3 (t/m^3): *d*
- dry bulk density, g/cm^3 (t/m^3): γ

$$\gamma = \frac{D}{1{,}000}$$

- net water content, volume %: e_v

$$e_v = \frac{E}{D} \text{ X 100 X } d$$

- void ratio: *e* (volume of voids divided by volume of solids)

$$e = \frac{d}{\gamma} - 1$$

- degree of saturation, percentage by volume: *S*

$$S = \frac{e_v}{e}$$

- gross water content, percentage by mass: W^1

$$W^1 = \frac{E}{C} \text{ X } 100$$

- net water content, percentage by mass: *W*

$$W = \frac{E}{D} \text{ X } 100$$

.4 Presentation of the compaction tests

For each compaction test the calculated void ratio (*e*) value is plotted as the ordinate in a diagram with net water content (e_v) and degree of saturation (*S*) as the respective abscissa parameters.

.5 Compaction curve

The test sequence results in a specific compaction curve (see figure 1.4.3).

The critical moisture content is indicated by the intersection of the compaction curve and the line *S* = 80% degree of saturation. The transportable moisture limit (TML) is the critical moisture content.

Optimum moisture content (OMC) is the moisture content corresponding to the maximum compaction (maximum dry density) under the specified compaction condition. To check the applicability of this test, the relationship between moisture content and dry density should be evaluated, during this test. Then the OMC and the corresponding degree of saturation should be determined. This test procedure was developed based on the finding that the degree of saturation corresponding to OMC of iron ore fines was 90 to 95%, while such degree of saturation of mineral concentrates was 70% to 75%. In the case that the degree of saturation corresponding to OMC is less than 90%, the shipper should consult with an appropriate authority, for the reason that this test may not be applicable for the material and the TML determined by this test may be too high.

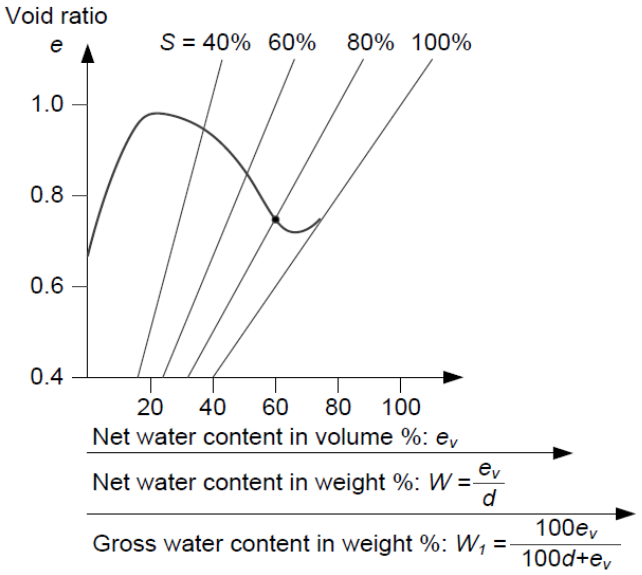

Figure 1.4.3

1.5 Modified Proctor/Fagerberg test procedure for coal

1.5.1 Scope

This procedure details the laboratory determination of transportable moisture limit (TML) for coals up to a nominal top size of 50 mm. The procedure is based on a modification of the Proctor/Fagerberg test described in 1.3 of this appendix.

Key modifications to the original test procedure contained in 1.3 of this appendix are:

.1 Sample preparation to facilitate the testing of 0 x 50 mm coal through reconstitution to -25 mm;

.2 Use of a 150 mm diameter compaction cylinder; and

.3 Sample compaction using a hammer equivalent to the Proctor/Fagerberg "D" energy hammer.

The transportable moisture limit is the moisture content corresponding to the intersection of the 70% degree saturation curve and the test sample compaction curve.

In the case of coals where moisture freely drains from the sample such that the test sample compaction curve does not extend to or beyond 70% saturation, the test is taken to indicate a cargo where water passes through the spaces between particles and there is no increase in pore water pressure. Therefore, the cargo is not liable to liquefy. (See 7.2.2 of this Code).

The procedure commences with a drum of coal containing a sample of not less than 170 kg delivered to the testing laboratory and terminates with the laboratory reporting the test result for the coal. Details of the sample collection process are excluded from this procedure. However, it is important that the sample accurately represents the size distribution of the cargo and reference should be made to the normative reference list below.

1.5.2 Normative references

The following documents are referenced in this procedure. For dated references, only the cited edition applies.

- AS 1289.3.5.1:2006, Methods of testing soils for engineering purposes. Method 3.5.1: Soil classification tests – Determination of the soil particle density of a soil – Standard method;
- ISO 589:2008, Hard Coal – Determination of total moisture;
- ISO 3310-2:2013, Technical requirements and testing – Part 2: Test sieves of perforated metal plate; and
- ISO 13909-4:2001, Hard coal and coke – Mechanical sampling – Part 4 – Coal – Preparation of test samples.

1.5.3 Definitions

1.5.3.1 Transportable moisture limit (TML)

The transportable moisture limit (TML) of a cargo which may liquefy means the maximum moisture content of the cargo which is considered safe for carriage in a ship not complying with the requirements in 7.3.2 of this Code.

1.5.3.2 Test outcomes

The transportable moisture limit determined by this procedure is the moisture content corresponding to the intersection of the 70% degree saturation curve and the test sample compaction curve. This is also referred to as the PFD70 value (Proctor/Fagerberg – D energy hammer – 70% saturation).

Where moisture freely drains from the sample or the cylindrical mould at moisture content such that the test sample compaction curve does not extend to or beyond 70% saturation (as described in 1.5.5.3.4), the test is taken to indicate a cargo where water passes through the spaces between particles and there is no increase in pore water pressure. Therefore, the cargo is not liable to liquefy. (See 7.2.2 of this Code).

1.5.3.3 Optimum moisture content (OMC)

The optimum moisture content is the moisture content corresponding to the maximum compaction (maximum dry density) under the specified compaction condition.

1.5.3.4 Gross water content or total moisture (W^1)

The moisture content of a sample is calculated as the mass of water divided by the total mass of solids plus water and is referred to as either the gross water content or the total moisture content. Gross water content is to be determined using the method for determining total moisture defined in the standard ISO 589:2008.

1.5.4 Determination of the TML of blends of two or more coals

In circumstances where a shipper intends to load a cargo consisting of a blend of two or more coals, the shipper may:

.1 determine the TML of the blend by direct application of the test method described within this procedure to a representative sample of the blended product; or

.2 declare the TML of the blend based on TML determinations on each of the component coals.

.1 Where all component coals in the blend are known to be group A and B coals:

.1.1 the blended cargo should be declared as group A and B, and

.1.2 the TML of the blended cargo should be determined as the lowest TML value of any of the component coals.

.2 Where a group A and B cargo component is blended with a coal which is designated as group B only:

.2.1 the blended cargo should be declared as group A and B, and

.2.2 the TML should be taken as the lowest TML of the group A and B component coals contained within the blend.

.3 Where all component coals are determined to be group B only coals, the blended cargo may be declared as a group B only cargo.

1.5.5 Modified Proctor/Fagerberg test procedure for coal

1.5.5.1 Apparatus

1.5.5.1.1 Work area

The work area should be located where the samples are protected from excessive temperatures, air currents and humidity variations. All samples should be stored in suitable sample containers, including plastic sample bags, and the containers should be sealed.

1.5.5.1.2 Standard sieves

Square aperture laboratory sieves of 16 mm and 25 mm aperture as nominated in ISO 3310-2:2013 are required for reconstitution of the sample at 25 mm top size. A 2.36 mm sieve is required for generation of + 2.36 mm and - 2.36 mm fractions for particle density determination. Optionally a 2 mm sieve may be used for this purpose.

1.5.5.1.3 Proctor/Fagerberg apparatus

The Proctor/Fagerberg apparatus consists of a cylindrical stainless steel mould having 150 mm diameter and 120 mm height with a removable extension piece (the compaction cylinder) and a compaction tool guided by a pipe at its lower end (the compaction hammer), which are shown in figure 1.5.5.1.3.1. A schematic diagram of the Proctor/Fagerberg apparatus is shown in figure 1.5.5.1.3.2 with dimensions and tolerances indicated in table 1.5.6.2.

Figure 1.5.5.1.3.1 – Example of Proctor/Fagerberg test apparatus, hammer and hammer guide

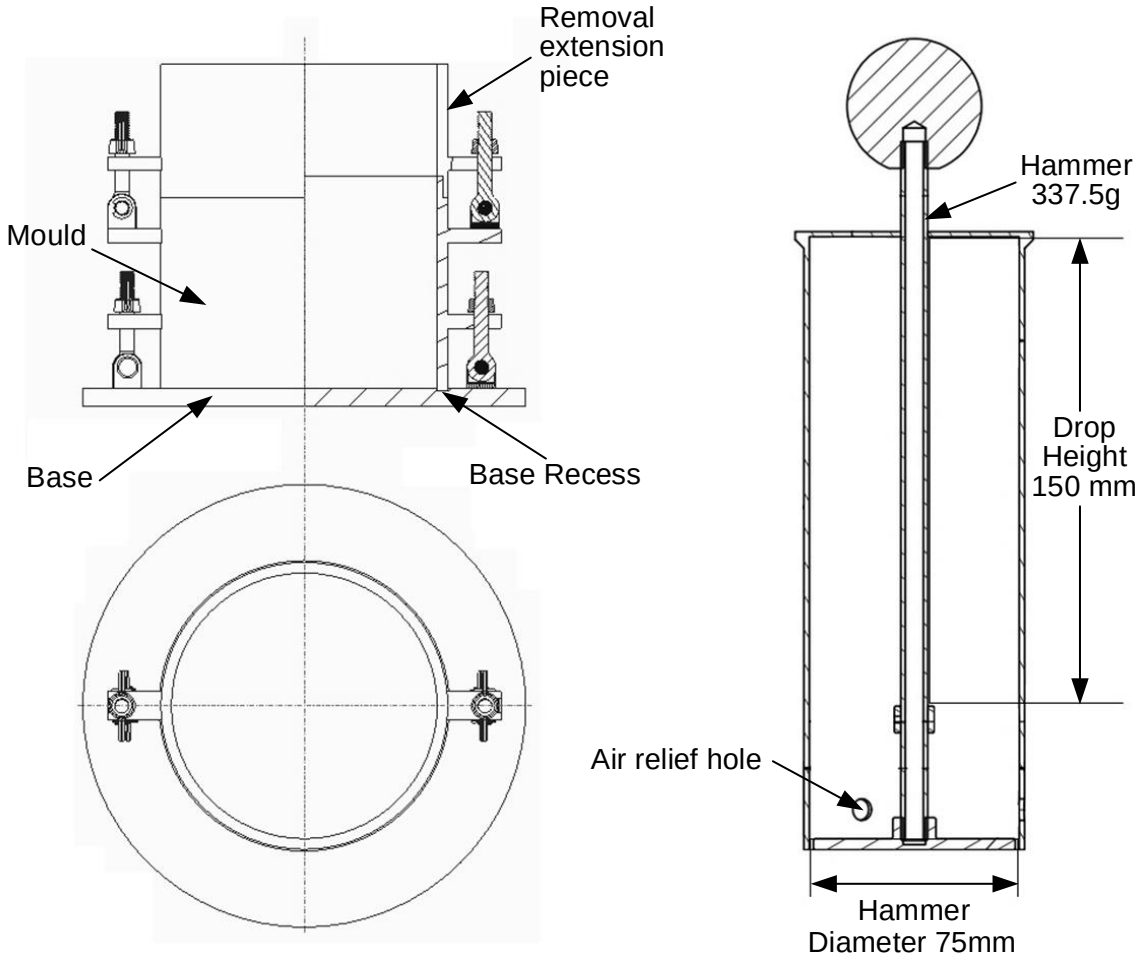

Figure 1.5.5.1.3.2 – Schematic of a Proctor/Fagerberg apparatus

1.5.5.1.4 Compaction hammer

A "D" energy equivalent compaction hammer is used for this test. Dimensions are shown in figure 1.5.5.1.3.2 and table 1.5.6.2 (Note: the compaction hammer has been modified to match the mould used.)

1.5.5.1.5 Drying oven

The drying oven should be ventilated, with forced circulation of air or inert gas, typically with a stainless-steel interior and capable of maintaining a temperature within the range of 105°C ± 5°C.

1.5.5.1.6 Weighing balance

The weighing balance should be capable of weighing the sample and the container, as received, with an accuracy of better than ± 5 g.

1.5.5.1.7 Pycnometer

Water pycnometry equipment is used to determine the density of the full-sized coal (non-crushed) in accordance with AS 1289.3.5.1:2006. Specific equipment required is as follows:

- a conical flask or density bottle of 250 mL capacity;
- a vacuum desiccator or other vacuum equipment;
- a drying oven set to 105°C to 110°C;
- balances: one with ± 0.05 g accuracy and the second with ± 1 g accuracy;
- a 0°C to 100°C thermometer;
- a 2.36 mm sieve (as noted in 1.5.5.1.2)
- a vacuum source;
- a water bath set at 60°C;
- distilled, demineralized or deionized water;
- a wash bottle containing water;
- a wire basket to hold the + 2.36 mm sample;
- a container filled with water to hold the wire basket without interference; and
- a scale to weigh the basket both suspended in water and drained.

1.5.5.1.8 Containers for hand mixing and sample preparation

Sufficient heavy-duty plastic buckets with lids of not less than 10 L capacity are required for storage and handling. Heavy-duty plastic bags (200 micron thick or greater) are required for storage and hand mixing of samples.

1.5.5.1.9 Flat scraping device

A thin steel scraper is required for separating the remnant sample formed in the extension piece lying above the top level of the mould. For ease of use, the scraper should have dimensions of 160 mm wide, 200 mm long and 3 mm to 5 mm thick, such as that shown in figure 1.5.5.1.9.

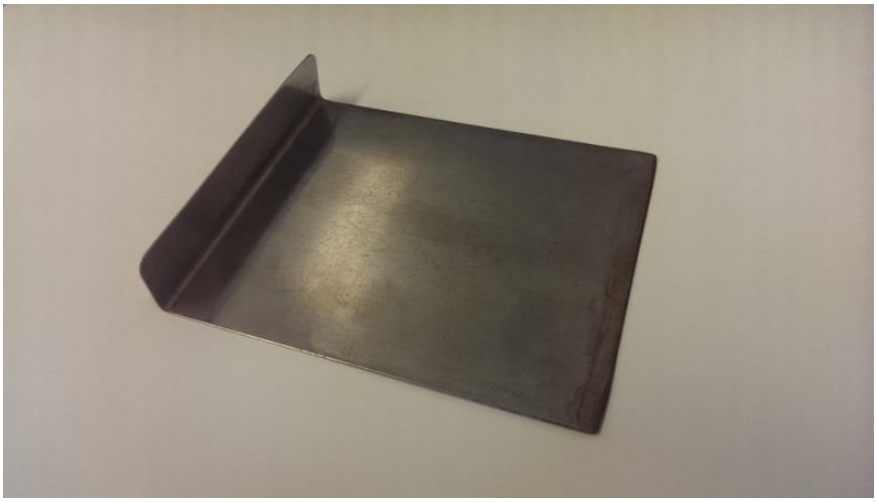

Figure 1.5.5.1.9 – Typical scraping device

1.5.5.1.10 Drying trays

Drying trays or pans should have a smooth surface, be free from contamination and heat resistant, for example stainless steel or enamel. Dimensions should be suitable to fit in the drying oven and ensure that the total sample can be contained at a loading of about 1 g/cm^2 of surface area.

1.5.5.1.11 Spray bottle

A suitable plastic bottle is required to add a mist spray of water to the sample.

1.5.5.1.12 Gloves

Heat resistant gloves are required for removal of hot trays and dishes.

1.5.5.1.13 Sample divider

A suitable sample divider as specified in ISO 13909-4:2001 is required for sub-sampling the primary sample and blending the reconstituted sample for testing.

1.5.5.2 Sampling and sample preparation

1.5.5.2.1 General

This procedure commences with receipt of sample of not less than 170 kg, sealed in a heavy duty (200 micron thick) plastic bag and contained in a suitable drum (e.g. 220 L). This packaging ensures the sample does not dry prior to TML determination.

1.5.5.2.2 Sample preparation

Representative samples are required that have been obtained using ISO 13909-4:2001 and if required may be partially air dried or partially dried at a temperature of 40°C or less to reduce the water content to a starting point suitable for dry sieving the coal with minimal fines adhering to the oversize fraction. For this purpose, samples should not be dried below 6% total moisture. The representative subsamples for the test should not be fully dried, except in the case of gross water content determination.

1.5.5.2.2.1 Sample homogenization and division

Take the as-received sample and divide into individual subsamples using a sample dividing apparatus as specified in ISO 13909-4:2001. Place these subsamples into heavy-duty plastic bags.

1.5.5.2.2.2 Reconstituted sample preparation procedure

When the sample contains particles above 25 mm, the reconstitution process below should be applied.

In this process, particles above 25 mm are removed from the sample and replaced by an equivalent mass of particles in the range 16 mm to 25 mm. Through this process a final reconstituted sample of sufficient mass for TML testing is generated which contains a maximum particle size of 25 mm.

One of two methods may be selected to generate the reconstituted sample:

.1 Split the entire as-received sample and then reconstitute; or

.2 Scalping off particles above 25 mm and substituting particles between 16 mm and 25 mm from a separate subsample.

Method 1 Splitting the full as-received sample and reconstitution

Step 1 Take the full as-received sample.

Step 2 Screen at 25 mm, 16 mm and 2.36 mm. If a 2.36 mm screen is not available, a 2 mm screen may be used.

Step 3 Weigh each of the four size fractions and calculate the percentage represented by each size fraction.

Step 4 Sub-divide from each size fraction below 25 mm the required mass to create a 25 kg reconstituted sample using the sample size components specified in table 1.5.5.2.2.2.1.

Table 1.5.5.2.2.2.1 Reconstitution size proportions (Method 1)

Size fraction	Quantity
-2.36 mm (or -2 mm)	percentage of this fraction in the original sample
2.36 mm (or 2 mm) to 16 mm	percentage of this fraction
16 mm to 25 mm	percentage of this fraction plus the percentage of + 25 mm coal

Step 5 Combine each size fraction.

Step 6 Fully mix the reconstituted sample.

Step 7 Split the sample into approximately eight representative subsamples and place each into a heavy duty plastic bag. These bags now contain the sample for Proctor/Fagerberg testing.

Step 8 A sample of particles passing a 2.36 mm screen (or 2 mm if 2.36 mm is not available) is required for particle density pycnometry.

Method 2 Scalping particles above 25 mm and replacement with 16 mm to 25 mm particles

This method is described in figure 1.5.5.2.2.2 and table 1.5.5.2.2.2.2. The reconstitution process commences where the coal is initially sieved into particle sizes larger than 25 mm and smaller than 25 mm. Coal particles in the size range of 16 mm to 25 mm are extracted from separate subsamples and reconstituted back into the original - 25 mm screened coal based on a mass equivalent to the + 25 mm sized coal removed from the initial sample to provide a final reconstituted sample of sufficient mass for TML testing.

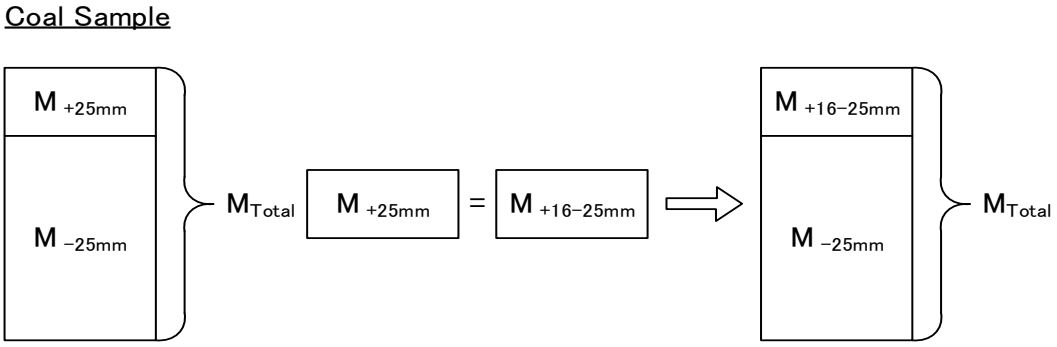

Figure 1.5.5.2.2.2 – Overview of sample reconstitution (Method 2)

Table 1.5.5.2.2.2.2 Sample reconstitution (Method 2)

Step		Example
1	Generate a sample of approximately 25 kg which is sufficient to complete approximately eight Proctor/Fagerberg tests.	Assumes each subsample bag contains 8 kg to 10 kg.
2	Screen this sample at 25 mm, ensuring minimal adhering fines on the + 25 mm fraction. Weigh the + 25 mm coal.	For a coal containing 20% + 25 mm material, approximately 5 kg of initial sample is removed.
3	Create sufficient 16 mm to 25 mm coal by screening one or more further subsample bags of coal at 16 mm and 25 mm.	In the above example, 5 kg of 16 mm to 25 mm coal is required.
4	Extract an amount of 16 mm to 25 mm coal of mass equal to the mass of + 25 mm removed in step 2 within ± 0.05 kg using a rotary sample divider or similar device, recombining sector trays as required to obtain the required mass.	5 kg in the above case.
5	Add the mass of 16 mm to 25 mm coal from step 4 to the - 25 mm coal from step 2. Blend and divide into approximately eight test portions using a rotary sample divider or similar device.	
6	Place each reconstituted test portion in heavy duty plastic bags, label and seal. **These now become the test portions used for Proctor/Fagerberg testing.**	Each bag should contain approximately 2.5 kg to 3 kg of reconstituted - 25 mm coal.
7	Discard the + 25 mm and - 16 mm coal.	

1.5.5.2.3 Initial moisture

Initial moisture is to be determined on a test portion from table 1.5.5.2.2.2.2 step 5 using the method provided in ISO 589:2008. This moisture value provides a guide to the moisture steps required to develop the Proctor/Fagerberg compaction curve.

1.5.5.2.4 Particle density measurement

In accordance with water pycnometer standard AS 1289.3.5.1:2006, measure the density of solids on the full size range (non-crushed) coal. The density of solids is used for determining the void ratio for plotting compaction curves. The recommended methodology is described below:

.1 Generate a full particle size sample of approximately 10 kg, weigh and then screen the entire contents at 2.36 mm. If a 2.36 mm screen is not available, a 2 mm screen may be substituted. Record the following:

.1 the total mass of the material;

.2 the mass of + 2.36 mm material; and

.3 the mass of - 2.36 mm material.

.2 Calculate the percentage of - 2.36 mm coal in the sample.

.3 Divide the + 2.36 mm coal into two test portions using sample dividing apparatus as specified in ISO 13909-4:2001 such as a rotary sample divider. Place each test portion in a heavy duty plastic bag and label.

.4 Divide the - 2.36 mm coal into two test portions, place each test portion in a heavy duty plastic bag and label.

.5 Determine the density of solids of the + 2.36 mm fraction following the method described in Section 5.2 of AS 1289.3.5.1:2006. As noted in the standard, duplicate determinations are required.

.6 Determine the density of solids of the - 2.36 mm fraction using the method described in Section 5.1 of the above standard with the following clarifications:

.1 Use of 250 mm conical or pycnometry flasks is recommended.

.2 From the sample bag pour 1 L of coal into a beaker of known tare weight.

.3 Weigh the 1 L sample and calculate the approximate bulk density of the material.

.4 Remove a portion of the sample (nominally a mass in kilograms of 0.18 x bulk density) and place into the flask, and complete the pycnometry analysis.

.5 A water bath temperature of 60°C is recommended.

.7 Calculate the density of solids using the method in Section 6 of AS 1289.3.5.1:2006.

1.5.5.3 Test procedure

1.5.5.3.1 Variables and definitions

The variables and definitions used in the determination of TML are summarized in table 1.5.5.3.1 with some key variables as illustrated in figure 1.5.5.3.1.

Table 1.5.5.3.1 – Summary of variables and definitions

Variable	Unit	Symbol/value used in calculations
Mass of empty cylinder and base	g	A
Mass of cylinder, base and tamped test portion	g	B
Wet mass of test portion in the mould	g	$C = B – A$
Wet mass of test portion removed from the mould	g	C_1
Dry mass of test portion removed from the mould	g	D_1
Gross water content	%	W^1
Dry mass of test portion in the mould	g	D
Mass of water in the mould	g	E
Volume of cylinder	cm^3	V
Density of solids	g/cm^3	d
Density of water	g/cm^3	ρ_w

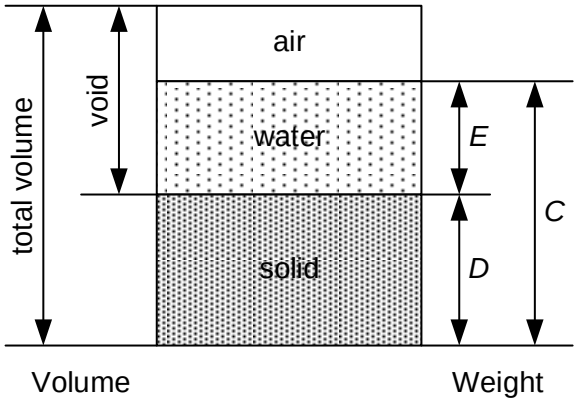

Figure 1.5.5.3.1 – Illustration of key variables

1.5.5.3.2 Establishment of the initial compaction point

The initial compaction point is obtained using the first test portion of the reconstituted material at the initial moisture content. For each compaction point determination, all steps in the procedure from packing the mould to weighing the mould and sample are to be completed at the same time without breaks. In any case, coal should not be left in the mould for longer than 30 min prior to weighing.

The test procedure is as follows:

Step 1 Clean the mould, collar and base plate. Inspect and clean the hammer and ensure that it moves freely in the guide tube.

Step 2 Determine the mass, *A*, of the empty cylinder, comprising the mould plus base plate.

Step 3 Assemble the mould, collar and base plate and place the assembly on a stable bench.

Step 4 Place approximately 0.5 L (one fifth of the full 2.5 L) of the test portion into the mould, level, and then tamp uniformly over the surface by dropping the hammer 25 times vertically through the full height of the guide pipe, moving the guide pipe to a new position after each drop. The required pattern for even compaction of each layer in the mould is shown in figure 1.5.5.3.2.

Step 5 Repeat step 4 four more times so that there are 5 layers of material in the mould. Ensure that the compacted test portion with the final layer is above the top of the compaction mould whilst the extension piece is still attached.

Step 6 When the last layer has been tamped, remove the extension piece taking care not to disturb the compacted test portion inside. Level the compacted test portion to the top of the mould using the flat scraping device, ensuring that any large particles that may hinder levelling of the test portion are removed and replaced with material contained in the extension piece and re-level. If any holes in the surface are still observed after levelling, they should be manually filled with finer material contained in the extension piece. Care should be taken to avoid any further compaction of the test portion.

Step 7 Determine the mass, *B*, of the mould and compacted coal and then calculate the mass, *C*, of the wet test portion using the equation:

$$C = B - A \quad (1)$$

Step 8 When the weight of the cylinder with the tamped test portion has been determined, remove the test portion from the mould, determine the mass of the wet test portion, C_1, and dry the entire test portion in an oven at 105°C until constant mass is achieved. After drying, determine the weight, D_1, of the dried test portion and then calculate the percentage gross water content, W^1, as follows:

$$W^1 = (C_1 - D_1)/C_1 \times 100\% \quad (2)$$

Step 9 Using the calculated gross water content, calculate the mass of the dry test portion in the mould, D, using the equation:

$$D = C - C \times W^1/100 \quad (3)$$

Step 10 Calculate the mass, E, of water in the mould using the equation:

$$E = C - D \quad (4)$$

Step 11 Discard the used coal sample. Coal from a previously compacted test portion should not be reused.

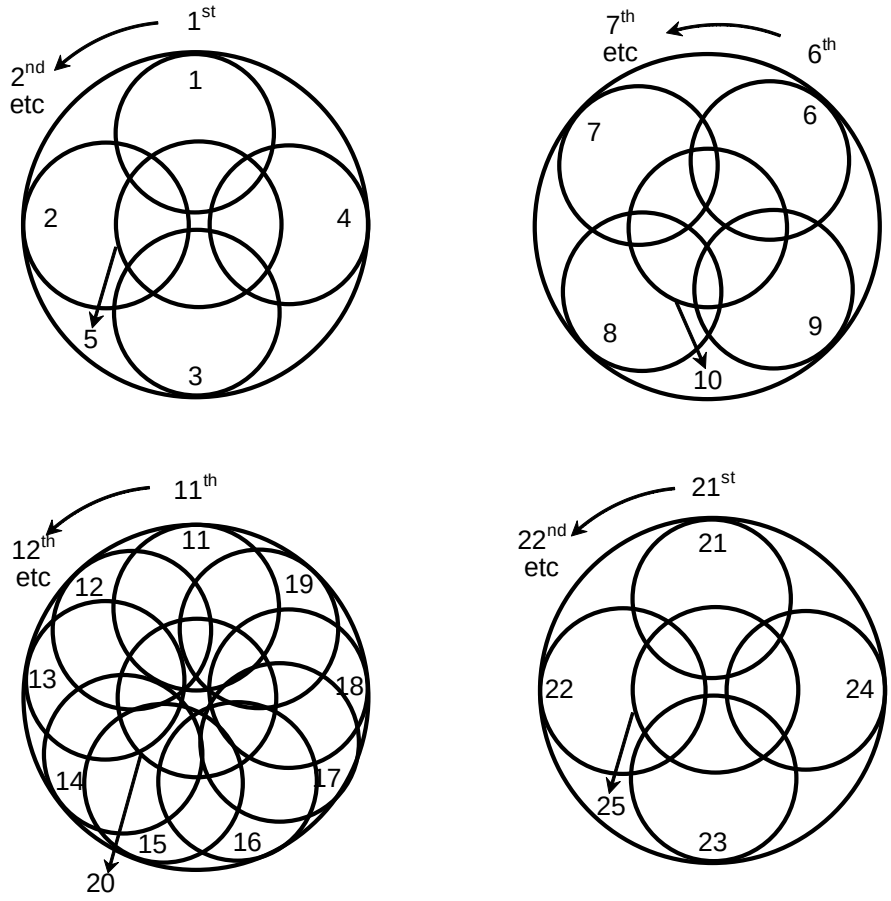

Figure 1.5.5.3.2 – Recommended compaction patterns

1.5.5.3.3 Establishment of complete compaction curve

The range of water contents should be adjusted so that partially dry to almost saturated test portions are obtained. Care should be taken to follow the precaution in 1.5.5.3.2 above regarding prompt completion of each point in the compaction curve.

The test procedure is as follows:

Step 1 For each compaction test, a predetermined amount of water is added to the test portion (approximately 2.5 kg) in a heavy duty plastic bag. The water quantity added is that required to increase the moisture content to the target value for the next test. The water should be added as a mist spray to the surface of the individual test portions. The water at this point should be added slowly and in small quantities, as the introduction of large amounts of water may induce localized compaction behaviour.

Step 2 After the calculated water addition, the test portion should then be mixed thoroughly in the plastic bag by sealing the bag and turning it over repeatedly for 5 min.

Step 3 The test portion should then be allowed to equilibrate for a minimum of 12 hours prior to compaction testing.

Step 4 Repeat steps 1 to 11 from 1.5.5.3.2.

Step 5 Repeat the test between four and seven times using the other prepared test portions with different water contents to obtain at least five points on the compaction curve. The water contents should be chosen so that:

.1 at least one point corresponds to moisture content higher than the optimum moisture content (OMC) or than the value corresponding to 70% of degree of saturation (*S*), in order to satisfactorily define the compaction curve; and

.2 at least one point corresponds to the degree of saturation (*S*) between 70% and 80%, in order to effectively assess the PFD70 value.

A point close to a degree of saturation (S) of 80% will also assist accurate assessment if the OMC is greater than 70%.

1.5.5.3.4 Visual appearance of coal in the cylindrical mould

In order for the test to obtain a PFD70 value, all tests conducted at or below the PFD70 moisture value should have an even moisture distribution throughout the cylindrical mould.

Two examples of tests using samples of the same coal at different moisture contents are shown in figure 1.5.5.3.4.1. The left-hand photograph shows a coal specimen at a relatively low degree of saturation. Note that the coal remains in place following removal of the collar. The right-hand photograph shows a specimen near or possibly above 70% degree of saturation. Once again the coal remains in place following removal of the collar. Both tests provided valid points on the compaction curve.

Figure 1.5.5.3.4.1 – Photographs showing valid tests for a partially saturated test portion (left) and a near fully saturated test portion (right)

Coals where water passes through the spaces between particles exhibit moisture migration within the Proctor/Fagerberg cylindrical mould. Moisture migration may take place when the degree of saturation of the specimen is less than 70%.

Evidence of moisture migration is from visual observation at the completion of each test as follows:

.1 moisture leakage from the base of the mould is evident as shown in figure 1.5.5.3.4.2; and

.2 the portion above the top of the cylindrical mould appears unsaturated and the test portion maintains its structure without deformation or movement.

In this case, moisture migration has occurred and hence for this coal water passes through the spaces between particles.

Figure 1.5.5.3.4.2 – Test showing water leakage from the base of the cylindrical mould indicating moisture migration

1.5.5.3.5 Calculation of key parameters for determination of compaction curve

Carry out the following calculations for each compaction test:

d = density of solids, g/cm^3 (t/m^3) by pycnometry (see 1.5.5.2.4)

γ = dry bulk density, g/cm^3 (t/m^3)
= D/V

e_v = net water content (percentage by volume)
= $(E/D) \times 100 \times d/\rho_w$

where ρ_w= density of water, g/cm^3 (t/m^3)

e = void ratio (volume of voids divided by volume of solids)
= $(d/\gamma) - 1$

S = degree of saturation (percentage by volume)
= e_v/e

W^1 = gross (total) water content (percentage by mass) (see 1.5.5.3.2, Step 8).

1.5.5.3.6 Presentation of compaction results

Record all the compaction test results in a suitable spreadsheet (such as that shown in table 1.5.6.1) and from this spreadsheet create a compaction curve as shown in figure 1.5.5.3.6 by plotting the calculated void ratio (e) for each compaction test on the ordinate against either the net or gross water content plotted on the abscissa.

The lines in figure 1.5.5.3.6 correspond to plots of void ratio (e) versus net water content (e_v) at 20%, 40%, 60%, 70%, 80% and 100% degree of saturation (S). These lines are calculated at five values of void ratio using the formulae in 1.5.5.3.7. (Note: These lines corresponding to degree of saturation will be curved in the case of plotting gross water content on the abscissa.)

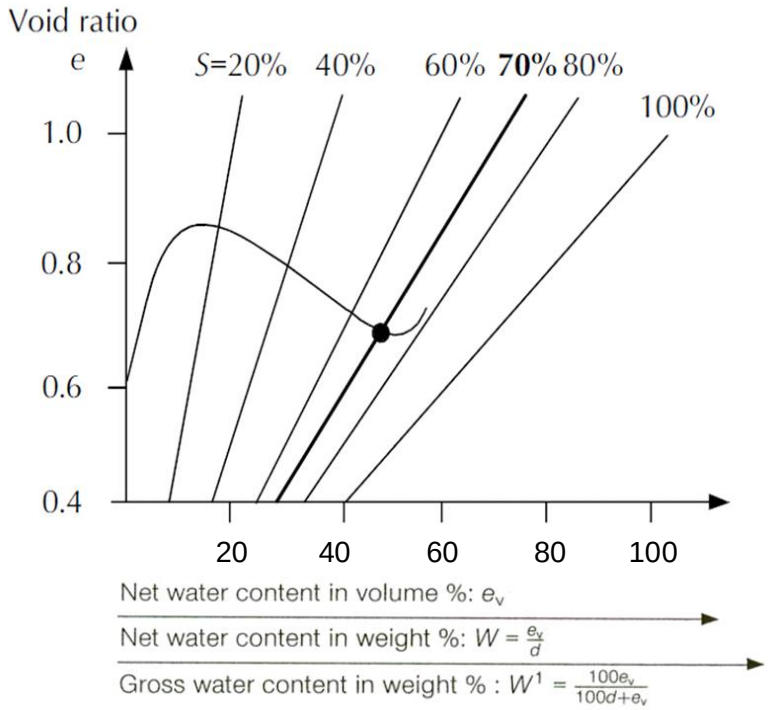

Figure 1.5.5.3.6 – Typical compaction curve

1.5.5.3.7 Sample compaction curve

An example of the results obtained when applying the modified Proctor/Fagerberg test to a coal sample is provided in table 1.5.6.1, with the corresponding compaction curve and the 70% degree of saturation line plotted as described below.

The preferred approach to presenting the results is to plot the void ratio (e) against the gross water content (W^1) allowing moisture for any saturation level to be read directly from the plot as gross water content. This approach is shown in figure 1.5.5.3.7. The saturation lines are plotted according to the equation:

$$e = W^1/(100 - W^1) \times 100 \times d/S$$

The intercept of the compaction curve with the 70% degree of saturation line in figure 1.5.5.3.7 occurs at a gross water content of 15.4%, which is the transportable moisture limit (TML). For this example, the optimum moisture content (OMC) occurs at a degree of saturation of about 85%.

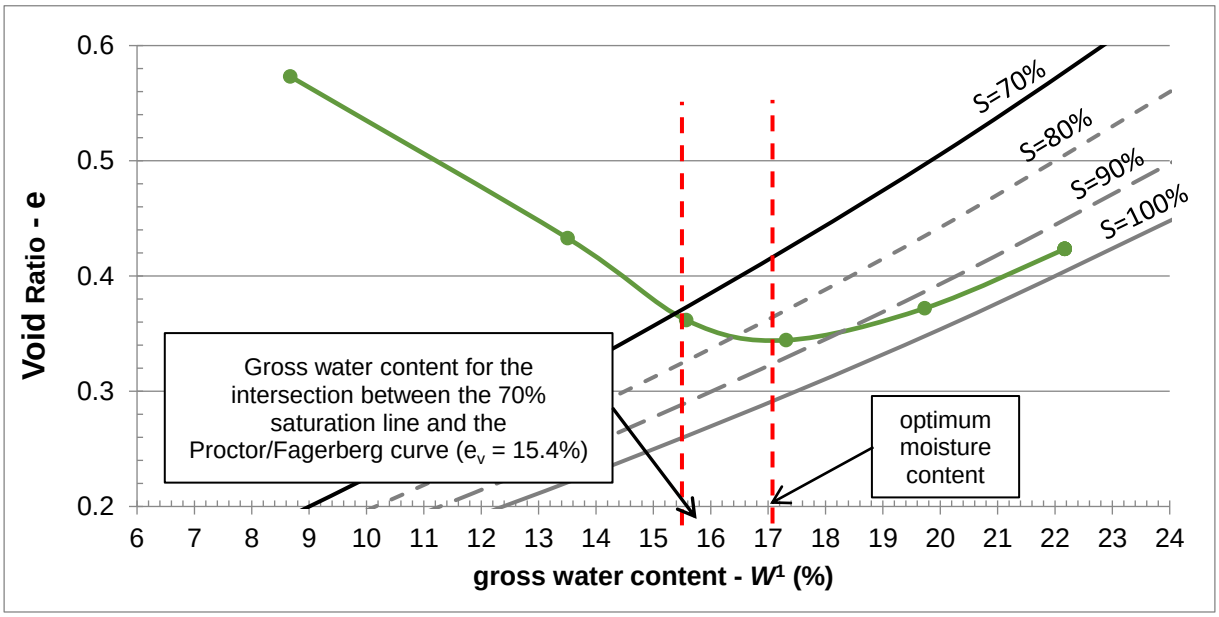

Figure 1.5.5.3.7 – Example of a measured compaction curve for void ratio versus gross water content with the 70%, 80%, 90% and 100% degree of saturation lines plotted

1.5.5.3.8 Determination of transportable moisture limit

1.5.5.3.8.1 Determination of PFD70 moisture content

The PFD70 value is determined as the gross (total) water content corresponding to the intersection of the compaction curve and the line *S* = 70% saturation. The optimum moisture content (OMC) is the gross (total) moisture content corresponding to the maximum compaction (maximum dry density and minimum void ratio) under the specified compaction condition.

The test procedure is applicable for determination of coal TML where the degree of saturation corresponding to the OMC of the coal is at or greater than 70%. Where the OMC lies below 70% degree of saturation, this test is not applicable for the specific coal and the PFD70 may overstate the TML. In such cases, the certificate of analysis should state that the OMC is below 70% saturation and the shipper should consult with an appropriate authority.

1.5.5.3.8.2 Cases where the highest determinable point on the compaction curve lies below 70% saturation

In coals where there is visual evidence that water passes through the spaces between particles and the compaction curve does not extend to or beyond the 70% degree of saturation line, the coal is deemed to be free-draining and a TML value is not applicable. By reference to 7.2.2 of this Code, such coals are cargoes which are not liable to liquefy, and hence are classified as group B only.

1.5.6 Test report

The test report from application of the modified Proctor/Fagerberg test procedure should include the following information:

.1 identification of the sample;

.2 a unique reference to this test procedure;

.3 reference to the appropriate standard adopted for determining the density of the solids:

either:

.1 the transportable moisture limit (TML) of the sample, expressed as the gross water content as a percentage of the sample by mass;

.2 the OMC lies below 70% degree of saturation and this test procedure is not applicable; or

.3 a statement that the test indicated that water passes through the spaces between particles at moisture content below the value corresponding to 70% degree of saturation, and the coal is therefore group B only.

.4 The solids density *d* in g/cm^3.

Table 1.5.6.1 – Example of TML determination for a coal sample using the modified Proctor/Fagerberg test procedure for coal

Date		Diameter of cylinder	150 mm
Product		Height of cylinder	120 mm
Sample		Volume of cylinder	2,121 mL
Initial gross water content (%)	5.6	TML	15.4%
Density of solids	1,416 kg/m^3		
Laboratory temperature	25°C	Size fraction	
Mass of mould (***A***)	7,271 g	Operator	
Initial dry density	899 kg/m^3	Tamper	337.5 g

Test number	Water added	Mass of mould + sample	Tray No.	Mass of tray	Mass of wet sample + tray	Mass of dry sample + tray	Measured gross water content	Gross water content	Net water content	Void ratio	Dry density	Degree of saturation	Wet bulk density	Mass of wet sample	Mass of dry sample	Mass of water
	(ml)	(g)		(g)	(g)	(g)	(%)	(%)	(%v)		(g/cm^3)	(%)	(g/cm^3)	(g)	(g)	(g)
		B						***W*^{1}**	***e*$_v$**	***e***	γ	***S***		***C***	***D***	***E***
1	0.00	9,360.00	T1	602.5	1,656.8	1,565.7	8.64	8.67	13.437	0.573	0.899	23.4	0.985	2,089.0	1,907.8	181.2
			T2	602.3	1,643.1	1,552.5	8.70									
2	150.00	9,692.70	T3	630.7	1,811.7	1,649.6	13.73	13.51	22.097	0.433	0.988	51.1	1.142	2,421.7	2,094.6	327.1
			T4	882.9	2,126.9	1,961.6	13.29									
3	250.00	9,881.60	T5	638.7	2,081.4	1,849.7	16.06	15.58	26.104	0.362	1.039	72.2	1.231	2,610.6	2,204.0	406.6
			T6	632.4	1,822.6	1,643.0	15.09									
4	350.00	9,971.00	T7	882.2	2,349.9	2,095.4	17.34	17.31	29.630	0.344	1.053	86.1	1.273	2,700.0	2,232.5	467.5
			T8	637.9	1,868.8	1,656.0	17.29									
5	450.00	9,996.20	T9	654.3	2,013.2	1,746.5	19.63	19.73	34.780	0.372	1.031	93.5	1.285	2,725.2	2,187.5	537.7
			T10	639.6	1,999.4	1,729.7	19.83									
6	550.00	9,980.00	T11	885.0	2,251.5	1,931.6	23.41	22.17	40.311	0.423	0.994	95.2	1.277	2,709.0	2,108.4	600.6
			T12	883.5	2,181.9	1,910.1	20.93									
7																
8																
9																
10																

Note: The example above uses two drying trays for each test.

Table 1.5.6.2 – Specifications and tolerances for Proctor/Fagerberg cylindrical mould and hammer

Parameter	Units	Dimension	Tolerance
Hammer mass	g	337.5	± 2
Hammer diameter	mm	75	± 0.2
Drop height	mm	150	± 2
Tube ID	mm	78	± 0.2
Tube OD	mm	82	± 0.2
Tube wall thickness	mm	2	± 0.2
Tube clearance	mm	1.5	± 0.2
Mould inner diameter	mm	150	± 0.5
Mould inner height	mm	120	± 1
Mould inner volume	cm^3	2,121	± 18
Removable extension piece height	mm	75	± 1
Depth of recess into base to seat	mm	1	± 0.2
Gap between mould and base	mm	≤ 0.1	
Gap between mould and extension piece	mm		(0 to + 0.1)
Clearance between mould and hammer	mm	≤ 6	

1.6 Modified Proctor/Fagerberg test procedure for bauxite

1.6.1 Scope

.1 The test procedure specified in this section (this test) should only be used for determining transportable moisture limit (TML) of bauxite cargoes containing both:

.1 more than 30% of fine particles less than 1 mm (D_{30} < 1 mm); and

.2 more than 40% of particles less than 2.5 mm (D_{40} < 2.5 mm).

.2 The TML of a cargo is taken as equal to the critical moisture content at 80% degree of saturation according to the modified Proctor/Fagerberg test procedure for bauxite where the optimum moisture content (OMC) of the bauxite tested occurs at saturation levels greater than or equal to 90%.

.3 The TML of a cargo is taken as equal to the critical moisture content at 70% degree of saturation according to the modified Proctor/Fagerberg test procedure for bauxite where the OMC of the bauxite occurs at saturation levels less than 90%.

.4 Where moisture freely drains from the sample such that the test sample compaction curve cannot extend to or beyond 70% saturation, the test is taken to indicate a cargo where water passes easily through the spaces between particles. Therefore, the cargo is not liable to liquefy.

1.6.2 Test equipment

.1 The Proctor apparatus (see figure 1.6.2) consists of a cylindrical iron mould (the CBR mould) with a removable extension piece that is screwed onto the top and a compaction tool guided by a pipe open at its lower end (the compaction hammer).

.2 A weighing balance (see 3.2) capable of weighing the sample and the container, as received, with an accuracy of better than ± 1 g, and suitable sample containers.

.3 A drying oven with a controlled temperature interval from 100°C to maximum 105°C.

.4 A container for hand mixing. Care should be taken to ensure that the mixing process does not reduce the particle size by breakage or increase the particle size by agglomeration.

.5 A gas or water pycnometry equipment to determine the density of the solid material as per a recognized standard (e.g. ASTM D5550, AS 1289, BS 1377 Part 2).

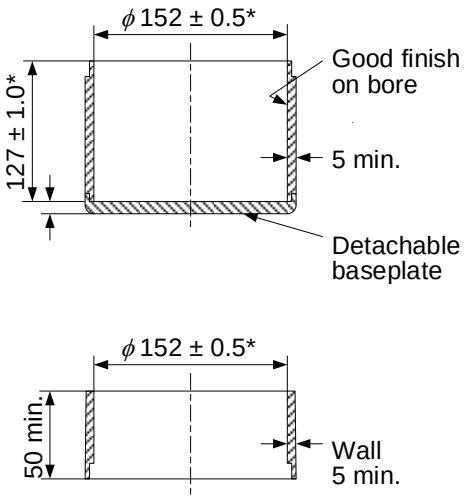

CBR Mould compaction cylinder and screw-on extension piece (from BS 1377 Part 4. all dimensions in mm)

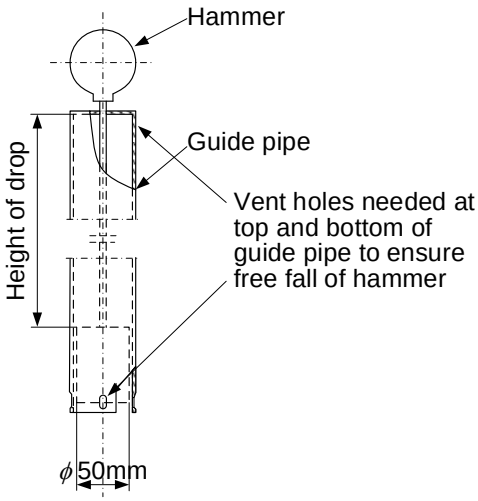

Compaction hammer

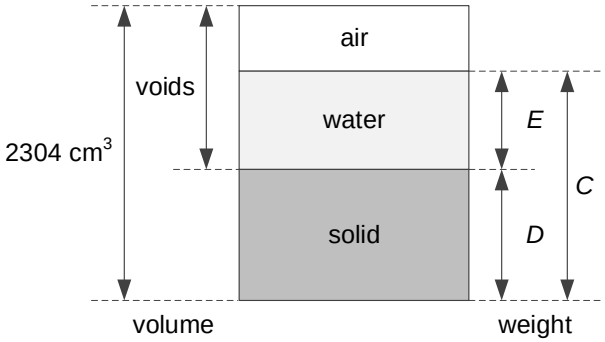

Figure 1.6.2 – Equipment and definitions

1.6.3 Temperature and humidity (see 1.1.3 of this appendix)

1.6.4 Procedure

.1 Establishment of a complete compaction curve

A representative sample according to a relevant standard (see 4.7 of this Code) of the test material is utilized.

.2 Sample homogenization and division

Divide the as-received sample into individual subsamples using a sample dividing apparatus as specified in ISO 6140:1991 "Aluminium ores – Preparation of samples". Place these subsamples into heavy-duty plastic buckets that can be sealed to preserve water content.

.3 Reconstituted sample preparation procedure

Reconstitution is required for bauxites if the amount of material in the representative sample that is coarser than 25 mm is greater than 10% of the total mass (by dry weight). In this case the reconstitution process below should be applied (see also figure 1.6.4.3). In this process, particles above 25 mm are removed from the sample and replaced by an equivalent mass of particles in the range 6.3 mm to 25 mm. Note that 6.3 mm is a standard sieve size. If it is not available, a 6 mm sieve may be used instead. Through reconstitution, a final reconstituted sample of sufficient mass for TML testing is generated which contains a maximum particle size of 25 mm, but which better reproduces the compaction characteristics of the full as-received particle size distribution with particles greater than 25 mm.

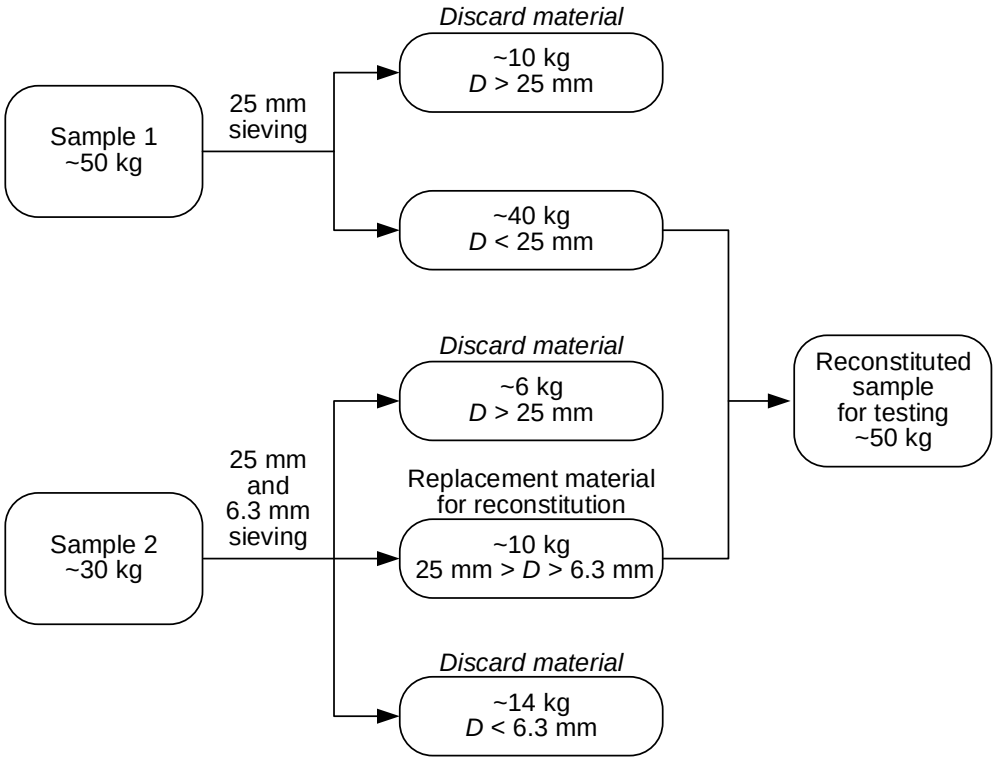

Figure 1.6.4.3 – Schematic diagram of reconstitution sample procedure

Step 1: The first step in sample preparation is to sieve the sample at 25 mm to determine the amount of dry weight that is larger than 25 mm. All material retained on the 25 mm sieve is to be discarded, while material passing 25 mm is to be tested (see figure 1.6.4.3). Screen about 40 kg of bauxite for one Proctor/Fagerberg compaction curve if reconstitution is required. If the amount (by dry weight) that is larger than 25 mm is 10% or less, then no reconstitution is required. A total of about 50 kg of 25 mm screened bauxite is needed for one Proctor/Fagerberg compaction curve. Obtain this and proceed to Step 4 if no reconstitution is required.

Step 2: If reconstitution is required, then from a separate representative subsample of the same ore screen at 25 mm and 6.3 mm and retain the portion between these two sieve sizes. Produce about 15 kg of screened bauxite between these two sizes for one Proctor/Fagerberg compaction curve (see figure 1.6.4.3).

Step 3: Add the 6.3 to 25 mm fraction from Step 2 to the <25 mm fraction from Step 1. The amount of 6.3 mm to 25 mm fraction added must be equal to the mass of > 25 mm bauxite removed and discarded in Step 1.

Step 4: Fully mix the reconstituted or scalped sample.

.4 Compaction

Compaction tests are executed for 5 to 10 (but typically 7) different moisture contents in separate tests. The number of tests should fully define the compaction curve, including accurately determining the optimum moisture

content and conditions near to or at full saturation. A total of about 40 kg to 100 kg of unscreened bauxite is typically needed for one series of tests, depending on whether reconstitution is required or not.

Divide the screened bauxite into 5 to 10 subsamples and place each in a sealed plastic bucket. The water content of the subsamples is adjusted by adding a suitable amount of water into each bucket in order to obtain water contents ranging from the as-received water content to almost saturated subsamples.

Typically one test is carried out at the as-received water content. Four to eight tests are carried out at higher water contents. Depending on the as-received water content, one or two tests are carried out at lower water contents than the as-received water content. These lower water content tests are obtained by partially drying the bauxite sub-sample at room temperature. Note that full drying of the bauxite samples is not to be carried out. Note that some bauxites are not sensitive to pre-drying, but unless this is comprehensively demonstrated for the bauxite being tested, pre-drying is not permitted.

The subsamples are mixed at the target water contents before being allowed to rest and equilibrate overnight in the sealed plastic buckets. The plastic bucket contents are remixed immediately before compaction to ensure that a homogeneous sample is tested.

The required quantity of prepared bauxite per compaction test is about 5 kg, so this is the target amount for each subsample. The subsamples will be compacted at the prepared water contents to define a full compaction curve.

Approximately one fifth of the subsample in a plastic bucket is filled into the mould with the extension piece attached (figure 1.6.2) and levelled to form the first layer increment. Bauxites that display plasticity may tend to stick together into clumps at the wetter water contents. It is important to gently disaggregate the clumps by hand into small particles when loading the mould.

The bauxite is then tamped uniformly over the surface of the layer. Tamping is executed as per the Proctor/Fagerberg method *D*, by dropping a 150 g hammer 58 times through the guide pipe, 0.15 m each time. The guide tube is held by hand and positioned so that it is just touching with the surface of the ore, but is not resting on it. This allows the hammer to fall the full specified height and compact the bauxite, while avoiding additional (and excessive) compaction arising from the weight of the guide tube, itself, which should not be compressing the bauxite.

The performance is repeated for all five layers so that the last layer only just overfills the mould-extension piece junction. The aim is to fill the mould by compacting in five nearly equal layers in order to produce a uniformly compacted sample in which the specified energy has been put into bauxite that occupies the mould volume.

Bauxite should not extend more than 1 cm in height above the mould into the extension piece. If a height of more than 1 cm of bauxite is found, the sample has been under compacted and the test should be redone.

When the last layer has been tamped, the extension piece is removed and the sample is levelled off along the brim of the mould with care, ensuring to remove any large particles that may hinder levelling of the sample, replacing them with material contained in the extension piece and re-levelling.

The levelling process should be a horizontal cutting action, not a pushing action as that would compress more material into the mould volume than had been compacted by the specified energy input.

After the weight of the cylinder with the tamped sample has been determined, the cylinder is emptied, the full sample is dried at 105°C as per ISO moisture determination standard for bauxite (ISO 9033:1989 "Aluminium ores – Determination of the moisture content of bulk material") and the weight is determined. The test is then repeated for the other samples with different moisture contents.

.5 Definitions and data for calculations *(see figure 1.6.2)*

- empty cylinder, mass in grams: A
- cylinder with tamped sample, mass in grams: B
- wet sample, mass in grams: C

$$C = B - A$$

- dry sample, mass in grams: D
- water, mass in grams (equivalent to volume in cm³): E

$$E = C - D$$

Volume of cylinder: 2,304.5 cm³

.6 Calculation of main characteristics

- density of solid material, g/cm³ (t/m³): d
- dry bulk density, g/cm³ (t/m³): γ

$$\gamma = \frac{D}{2{,}304}$$

- net water content, volume %: e_v

$$e_v = \frac{E}{D} \times 100 \times d$$

- void ratio: e (volume of voids divided by volume of solids)

$$e = \frac{d}{\gamma} - 1$$

- degree of saturation, percentage by volume: S

$$S = \frac{e_v}{e}$$

- gross water content, percentage by mass: W^1

$$W^1 = \frac{E}{C} \times 100$$

- net water content, percentage by mass: W

$$W = \frac{E}{D} \times 100$$

.7 Presentation of the compaction tests

For each compaction test the calculated void ratio (*e*) value is plotted as the ordinate in a diagram with net water content (e_v) and degree of saturation (*S*) as the respective abscissa parameters.

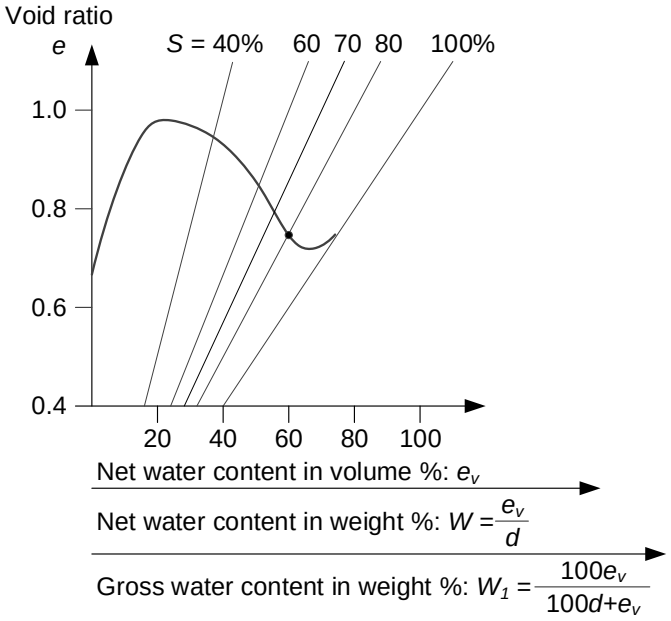

Figure 1.6.4.7.1

Form of bauxite compaction curve when the optimum moisture occurs at a saturation greater than 90%. TML is determined as the critical water content at 80% saturation.

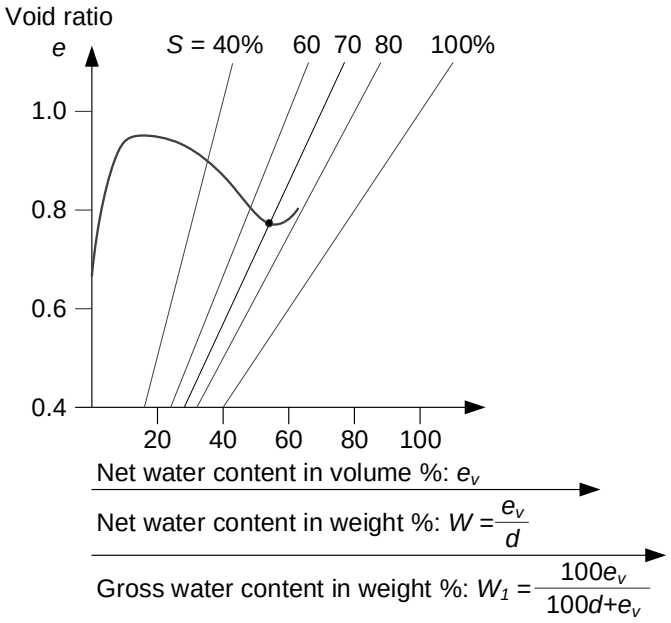

Figure 1.6.4.7.2

Form of bauxite compaction curve when the optimum moisture occurs at a saturation less than 90%. TML is determined as the critical water content at 70% saturation.

.8 Compaction curve

The test sequence results in a specific compaction curve (see figures 1.6.4.7.1 and 1.6.4.7.2).

Should the optimum moisture content (OMC) of bauxite occur at or above 90% saturation, the critical moisture content is indicated by the intersection of the compaction curve and the line $S = 80\%$ degree of saturation (see figure 1.6.4.7.1). The TML is the critical moisture content.

Should the optimum moisture content (OMC) of bauxite occur below 90% saturation, the critical moisture content is indicated by the intersection of the compaction curve and the line $S = 70\%$ degree of saturation (see figure 1.6.4.7.2). The TML is the critical moisture content.

Where the OMC is not clearly defined by carrying out a sufficient number of tests at water contents close to and on either side of the OMC, then a TML based on $S = 80\%$ cannot be adopted. The TML shall be based on $S = 70\%$. This is to guard against the erroneous adoption of a high OMC due to insufficient definition of the compaction curve.

Where moisture very freely drains from the sample at moisture content such that the test sample compaction curve does not extend to or beyond 70% saturation, the test is taken to indicate a cargo where water passes freely through the spaces between particles.

2 Test procedures to determine the angle of repose and associated apparatus

2.1 *Determination of angle of repose of fine-grained materials (size less than 10 mm)*: "*tilting box test*". *For use in laboratory or port of loading*

2.1.1 *Scope*

The test provides for the determination of the angle of repose of fine-grained non-cohesive materials (size less than 10 mm). The results so obtained may be used when interpreting sections 5 and 6 of this Code for the materials in question.

2.1.2 *Definition*

The angle of repose obtained by this test is the angle formed between the horizontal and the top of the testbox when the material in the box just begins to slide in bulk.

2.1.3 *Principle of test*

When measuring the angle of repose by this method, the material surface should initially be level and parallel to the testbox base. The box is tilted without vibration and tilting is stopped when the product just begins to slide in bulk.

2.1.4 *Apparatus (see figure 2.1.4)*

Apparatus is as follows:

.1 A framework, on top of which is attached an open box. Attachment of the box to the frame is by means of a shaft passing through bearings affixed to both the frame and the end of the box, enabling the box to be subjected to a controlled tilt.

.2 The dimensions of the box are 600 mm long, 400 mm wide and 200 mm high.

.3 To prevent sliding of the material along the bottom of the box during tilting, a tightly fitting grating (openings 30 mm x 30 mm x 25 mm) is placed on the bottom of the box before filling.

.4 Tilting of the box is effected by a hydraulic cylinder fitted between the frame and the bottom of the box. Other means may be used to obtain the required tilting but in all cases vibration must be eliminated.

.5 To pressurize the hydraulic cylinder, a hydropneumatic accumulator may be used, pressurized by air or gas at a pressure of about 5 kp/cm^2.

.6 The rate of tilting should be approximately 0.3°/s.

.7 Range of tilt should be at least 50°.

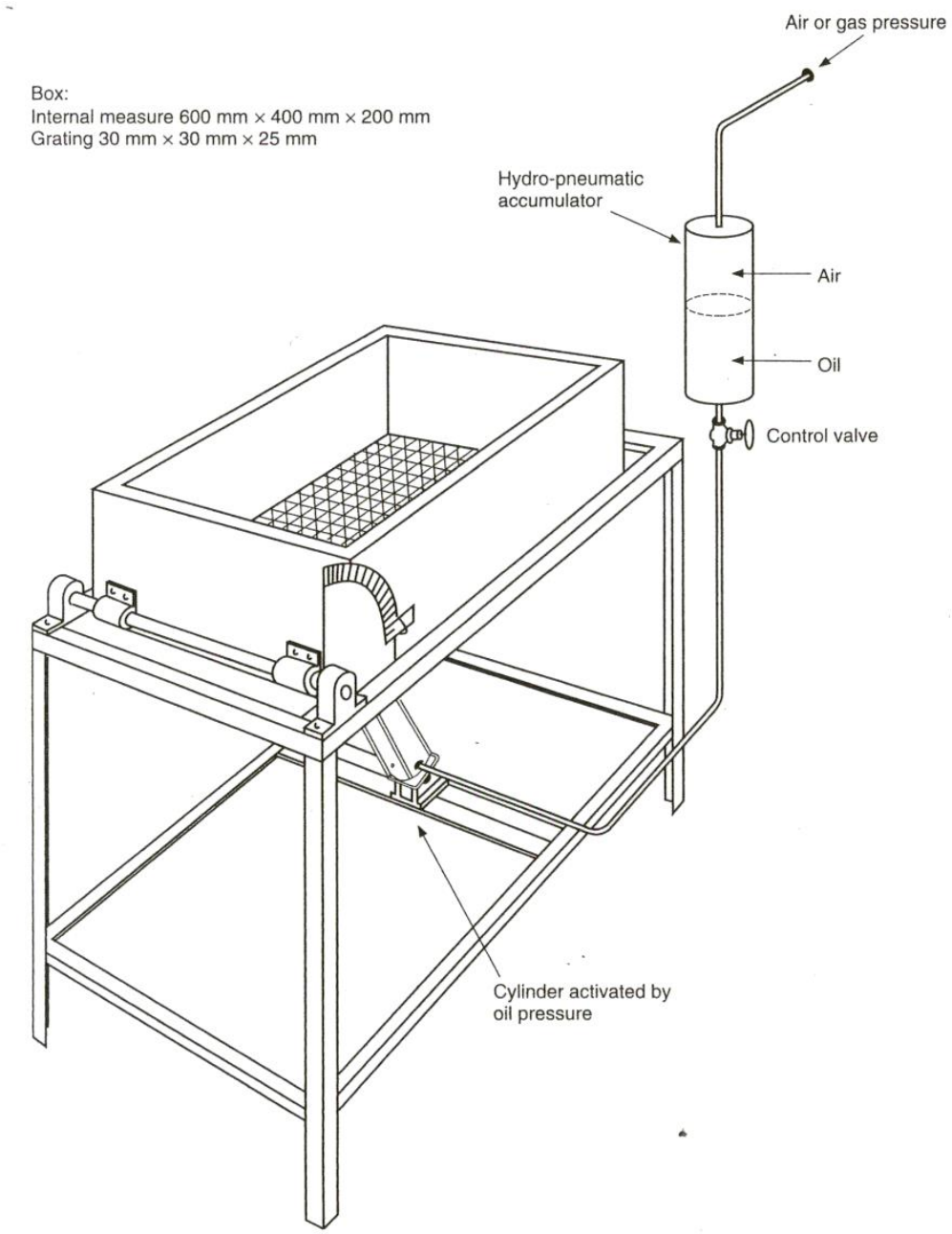

Figure 2.1.4 – *Basic sketch of tilting box*

.8 A protractor is fitted to the end of the shaft. One lever of the protractor is fitted so that it may be screw-adjusted to the horizontal.

.9 The protractor should measure the angle of the top of the box to the horizontal to within an accuracy of 0.5°.

.10 A spirit level or some other levelling device should be available to zero the protractor.

2.1.5 *Procedure*

The box is filled with the material to be tested by pouring it slowly and carefully from the lowest practical height into the box in order to obtain uniformity of loading.

The excess material is scraped off with the aid of a straight edge, inclined at about 45° towards the direction of scraping.

The tilting system is then activated and stopped when the material just begins to slide in bulk.

The angle of the top of the box to the horizontal is measured by the protractor and recorded.

2.1.6 *Evaluation*

The angle of repose is calculated as the mean of three measurements and is reported to within half a degree.

Notes: Preferably the test should be carried out with three independent samples.

Care should be taken to ensure that the shaft is adjusted to be horizontal before testing.

2.2 *Alternative or shipboard test method to be used for the determination of the angle of repose when the tilting box is not available*

2.2.1 *Definition*

According to this method the angle of repose is the angle between the cone slope and the horizontal measured at half height.

2.2.2 *Principle of test*

To determine the angle of repose, a quantity of the material to be tested is poured very carefully out of a flask onto a sheet of rough-textured paper, in such a way that a symmetrical cone is formed.

2.2.3 *Equipment*

The necessary equipment to carry out this test is as follows:

- a horizontal table free from vibrations;
- a sheet of rough-textured paper onto which the material should be poured;
- a protractor; and
- a 3-L conical flask.

2.2.4 *Procedure*

Put the sheet of paper on the table. Split 10 L of the material to be tested into three subsamples and test each in the following way:

Pour two thirds of the subsample (i.e. 2 L) onto the sheet, producing a starting cone. The remainder of this subsample is then poured very carefully from a height of a few millimetres on top of the cone. Care should be taken that the cone will be built up symmetrically. This may be achieved by revolving the flask slowly close around the top of the cone when pouring.

When measuring, care should be taken that the protractor does not touch the cone; otherwise this may result in sliding of the material and spoil the test.

The angle has to be measured at four places around the cone, about 90° apart.

This test should be repeated on the other two subsamples.

2.2.5 *Calculations*

The angle of repose is taken as the mean of the 12 measurements and is reported to half a degree. This figure can be converted to the tilting box value as follows:

$$a_t = a_s + 3° \qquad (2.2.5)$$

Where a_t = angle of repose according to the tilting box text

a_s = angle of repose according to the survey test

3 Standards used in test procedures

3.1 *Standard flow table and frame*[*]

3.1.1 *Flow table and frame*

3.1.1.1 The flow table apparatus shall be constructed in accordance with figure 3. The apparatus shall consist of an integrally cast rigid iron frame and a circular rigid table top, 10 inches ± 0.1 inch (254 mm ± 2.5 mm) in diameter, with a shaft attached perpendicular to the table top by means of a screw thread. The table top, to which the shaft with its integral contact shoulder is attached, shall be mounted on a frame in such a manner that it can be raised and dropped vertically through the specified height, with a tolerance in height of ± 0.005 inches (0.13 mm) for new tables and ± 0.015 inches (0.39 mm) for tables in use, by means of a rotated cam. The table top shall have a fine-machined plane surface, free of blowholes and surface defects, and shall be scribed as shown in figure 3. The table top shall be of cast brass or bronze having a Rockwell hardness number not less than HRB 25 with an edge thickness of 0.3 inches (8 mm), and shall have six integral radial stiffening ribs. The table top and attached shaft shall weigh 9 lb ± 0.1 lb (4 kg ± 0.05 kg) and the weight shall be symmetrical around the centre of the shaft.

[*] Refer to *Standard Specification for Flow Table for Use in Tests of Hydraulic Cement*, Designation C230-68. Reprinted by permission of ASTM International, 100 Barr Harbor Drive, PO Box C700, West Conshohocken, PA 19428-2959, USA, © ASTM 1977.

3.1.1.2 The cam and vertical shaft shall be of medium-carbon machinery steel, hardened where indicated in figure 3. The shaft shall be straight and the difference between the diameter of the shaft and the diameter of the bore of the frame shall be not less than 0.002 inches (0.05 mm) and not more than 0.003 inches (0.08 mm) for new tables and shall be maintained at from 0.002 inches to 0.010 inches (0.26 mm) for tables in use. The end of the shaft shall not fall upon the cam at the end of the drop, but shall make contact with the cam not less than 120° from the point of drop. The face of the cam shall be a smooth spiralled curve of uniformly increasing radius from ½ inch to 1¼ inches (13 mm to 32 mm) in 360° and there shall be no appreciable jar as the shaft comes into contact with the cam. The cam shall be so located and the contact faces of the cam and shaft shall be such that the table does not rotate more than one revolution in 25 drops. The surfaces of the frame and of the table which come into contact at the end of the drop shall be maintained smooth, plane, and horizontal and parallel with the upper surface of the table and shall make continuous contact over a full 360°.

3.1.1.3 The supporting frame of the flow table shall be integrally cast of fine-grained, high-grade cast iron. The frame casting shall have three integral stiffening ribs extending the full height of the frame and located 120° apart. The top of the frame shall be chilled to a depth of approximately ¼ inch (6.4 mm) and the face shall be ground and lapped square with the bore to give 360° contact with the shaft shoulder. The underside of the base of the frame shall be ground to secure a complete contact with the steel plate beneath.

3.1.1.4 The flow table may be driven by a motor,* connected to the camshaft through an enclosed worm gear speed reducer and flexible coupling. The speed of the camshaft shall be approximately 100 rpm. The motor drive mechanism shall not be fastened or mounted on the table base plate or frame.

The performance of a flow table shall be considered satisfactory if, in calibration tests, the table gives a flow value that does not differ by more than 5 percentage points from flow values obtained with a suitable calibration material.†

3.1.2 *Flow table mounting*

3.1.2.1 The flow table frame shall be tightly bolted to a cast iron or steel plate at least 1 inch (25 mm) thick and 10 inches (250 mm) square. The top surface of this plate shall be machined to a smooth plane surface. The plate shall be anchored to the top of a concrete pedestal by four ½ inches (13 mm) bolts that pass through the plate and are embedded at least 6 inches (150 mm) in the pedestal. The pedestal shall be cast inverted on the base plate. A positive contact between the base plate and the pedestal shall be obtained at all points. No nuts or other such levelling devices shall be used between the plate and the pedestal. Levelling shall be effected by suitable means under the base of the pedestal.

* A 1/20 hp (40 W) motor has been found adequate. The flow table may be driven by a hand-operated camshaft as shown in the illustration.

† Such a material may be obtained from the Cement and Concrete Reference Laboratory at the National Institute of Standards and Technology, 100 Bureau Drive, Stop 1070, Gaithersburg, MD 20899-1070, USA.

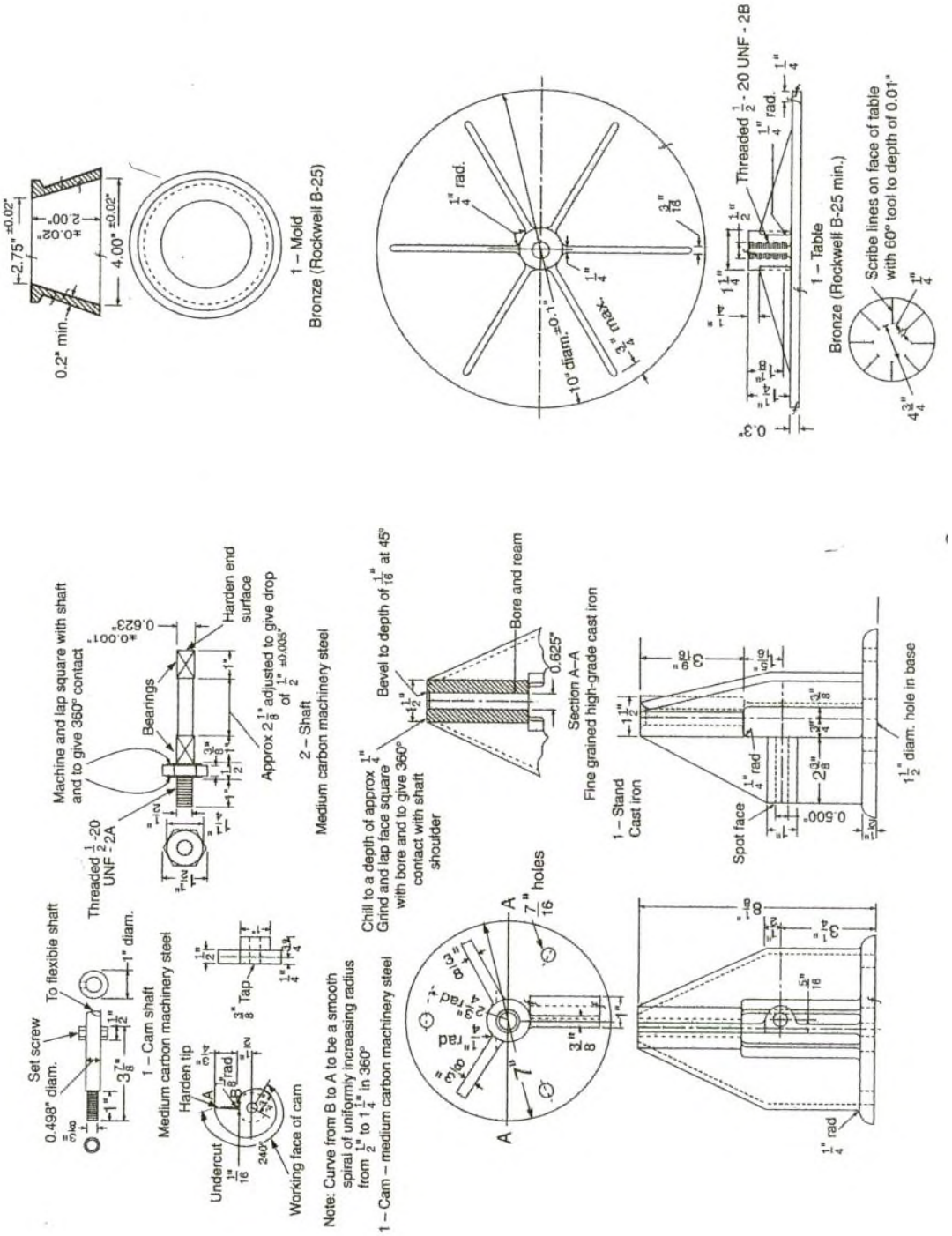
1 – Mold
Bronze (Rockwell B-25)
1 – Table
Bronze (Rockwell B-25 min.)
Scribe lines on face of table with 60° tool to depth of 0.01"
Threaded 1/2 - 20 UNF - 2B
1 – Cam shaft
Medium carbon machinery steel
Set screw
To flexible shaft
Machine and lap square with shaft and to give 360° contact
Bearings
Harden end surface
Approx 2 1/8" adjusted to give drop of 1/2" ±0.005"
2 – Shaft
Medium carbon machinery steel
Threaded 1/2-20 UNF-2A
Harden tip
Undercut
Working face of cam
Note: Curve from B to A to be a smooth spiral of uniformly increasing radius from 1/2" to 1 1/4" in 360°
1 – Cam – medium carbon machinery steel
Chill to a depth of approx 1/4" Grind and lap face square with bore and to give 360° contact with shaft shoulder
Bevel to depth of 1/16" at 45°
Bore and ream
Section A–A
Fine grained high-grade cast iron
1 – Stand
Cast iron
Spot face
1 1/2" diam. hole in base

Figure 3

3.1.2.2 The pedestal shall be 10 inches to 11 inches (250 mm to 275 mm) square at the top, and 15 inches to 16 inches (375 mm to 400 mm) square at the bottom, 25 inches to 30 inches (625 mm to 750 mm) in height, and shall be of monolithic construction, cast from concrete weighing at least 140 lb/ft^3 (2,240 kg/m^3). A stable gasket cork pad, ½ inch (13 mm) thick and approximately 4 inches (102 mm) square, shall be inserted under each corner of the pedestal. The flow table shall be checked frequently for levelness of the table top, stability of the pedestal, and tightness of the bolts and nuts in the table base and the pedestal plate. (A torque of 20 lb/ft (27 Nm) is recommended when tightening those fastenings.)

3.1.2.3 The table top, after the frame has been mounted on the pedestal, shall be level along two diameters at right angles to each other, in both the raised and lowered positions.

3.1.3 *Flow table lubrication*

3.1.3.1 The vertical shaft of the table shall be kept clean and shall be lightly lubricated with a light oil (SAE-10). Oil shall not be present between the contact faces of the table top and the supporting frame. Oil on the cam face will lessen wear and promote smoothness of operation. The table should be raised and permitted to drop a dozen or more times just prior to use if it has not been operated for some time.

3.1.4 *Mould*

3.1.4.1 The mould for casting the flow specimen shall be of cast bronze or brass, constructed as shown in figure 3. The Rockwell hardness number of the metal shall be not less than HRB 25. The diameter of the top opening shall be 2.75 inches $\pm$ 0.02 inches (69.8 mm $\pm$ 0.5 mm) for new moulds and 2.75 inches + 0.05 inches (+ 1.3 mm) and – 0.02 inches for moulds in use. The surfaces of the base and top shall be parallel and at right angles to the vertical axis of the cone. The mould shall have a minimum wall thickness of 0.2 inches (5 mm). The outside of the top edge of the mould shall be shaped so as to provide an integral collar for convenient lifting of the mould. All surfaces shall be machined to a smooth finish. A circular shield approximately 10 inches (254 mm) in diameter, with a centre opening approximately 4 inches (102 mm) in diameter, made of non-absorbing material not attacked by the cement, shall be used with the flow mould to prevent mortar from spilling on the table top.

3.2 *Scales and weights*[*]

3.2.1 *Scales*

3.2.1.1 The scales used shall conform to the following requirements. On scales in use, the permissible variation at a load of 2,000 g shall be $\pm$ 2.0 g. The permissible variation on new scales shall be one half of this value. The sensibility reciprocal[**] shall be not greater than twice the permissible variation.

[*] Refer to *Standard Method of Test for Compressive Strength of Hydraulic Cement Mortars*, Designation C109-3. Reprinted by permission of ASTM International, 100 Barr Harbor Drive, PO Box C700, West Conshohocken, PA 19428-2959, USA, © ASTM 1977.

[**] Generally defined, the sensibility reciprocal is the change in load required to change the position of rest of the indicating element or elements of a non-automatic indicating scale a definite amount at any load. For a more complete definition, see *Specifications, Tolerances, and Regulations for Commercial Weighing and Measuring Devices*, Handbook H44, National Institute of Standards and Technology, Washington, D.C., USA, September 1949, pp. 92 and 93.

3.2.2 *Weights*

3.2.2.1 The permissible variations on weights shall be as prescribed in the table below. The permissible variations on new weights shall be one half of the values in the table below.

PERMISSIBLE VARIATIONS ON WEIGHTS

Weight (g)	Permissible variations on weights in use, plus or minus (g)
1,000	0.50
900	0.45
750	0.40
500	0.35
300	0.30
250	0.25
200	0.20
100	0.15
50	0.10
20	0.05
10	0.04
5	0.03
2	0.02
1	0.01

4 Trough test for determination of the self-sustaining exothermic decomposition of fertilizers containing nitrates*

4.1 *Definition*

A fertilizer capable of self-sustaining decomposition is defined as one in which decomposition initiated in a localized area will spread throughout the mass. The tendency of a fertilizer offered for transport to undergo this type of decomposition can be determined by means of the trough test. In this test localized decomposition is initiated in a bed of the fertilizer to be contained in a horizontally mounted trough. The amount of propagation, after removal of the initiating heat source, of decomposition through the mass is measured.

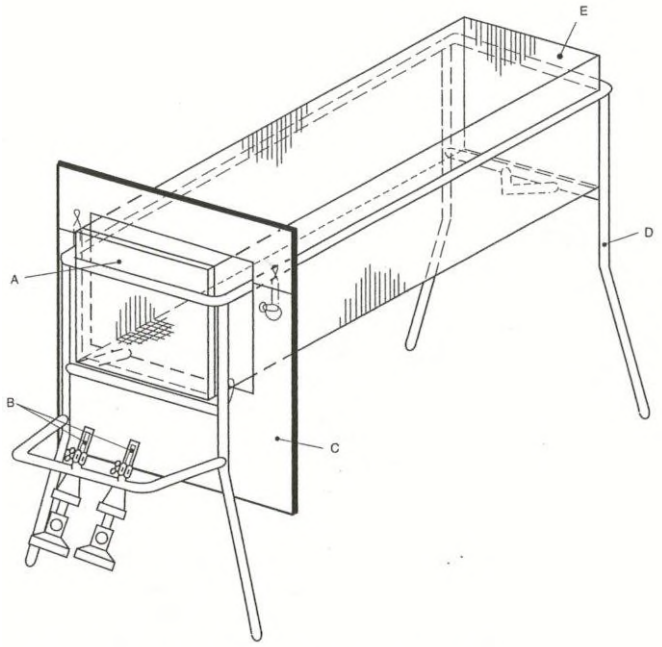

A Steel plate (150 x 150 mm and 1 to 3 mm thick)

B Gas burners (e.g. Teclu or Bunsen)

C Heat shield (2 mm thick)

D Stand (e.g. made from 15 mm wide, 2 mm thick steel bar)

E Gauze trough (150 x 150 x 500 mm)

Figure 4-1 – *Gauze trough with support and burners*

4.2 *Apparatus and materials*

The apparatus (figure 4-1) consists of a trough of internal dimensions 150 mm x 150 mm x 500 mm, open at the top. The trough is constructed of square-meshed gauze (preferably stainless steel) with a mesh width of about 1.5 mm and a wire thickness of 1.0 mm supported on a frame made from, for example, 15 mm wide, 2 mm thick steel bars. The gauze at each end of the trough may be replaced by 1.5 mm thick, 150 mm x 150 mm stainless steel plates. The trough should be rested on a suitable support. Fertilizers with a

* Source: Section 38 of the *United Nations Recommendation on the Transport of Dangerous Goods, Manual of Tests and Criteria*.

particle size distribution such that a significant amount falls through the mesh of the trough should be tested in a trough of smaller mesh gauze, or alternatively in a trough lined with gauze of a smaller mesh. During initiation sufficient heat should be provided and maintained to establish a uniform decomposition front. Two alternative heating methods are recommended, namely:

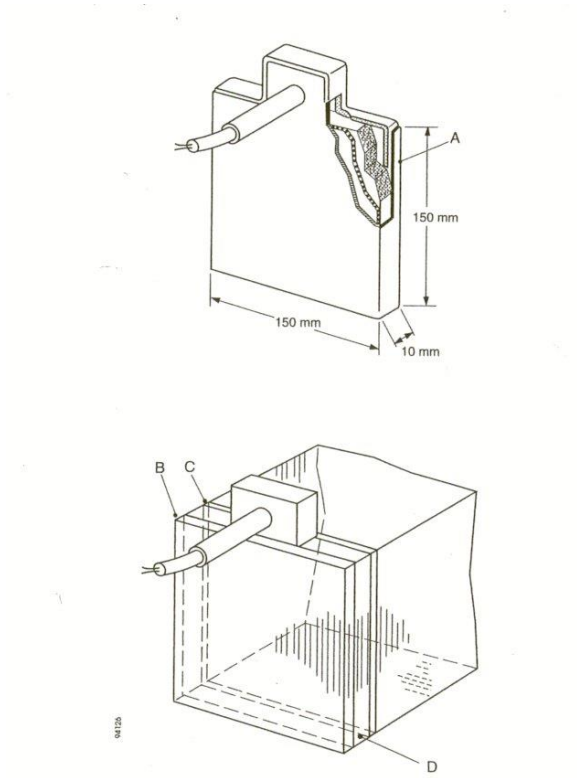

A Aluminium or stainless steel sheathing (thickness 3 mm)

B Insulating plate (thickness 5 mm)

C Aluminium foil or stainless steel plate (thickness 3 mm)

D Position of heating device in trough

Figure 4-2 – *Electrical heating device (capacity 250 W)*

4.2.1 *Electrical heating*

An electrical heating element (capacity 250 W) enclosed in a stainless steel box is placed inside and at one end of the trough (figure 4-2). The dimensions of the stainless steel box are 145 mm x 145 mm x 10 mm, and the wall thickness is 3 mm. The side of the box which is not in contact with the fertilizer should be protected with a heat shield (insulation plate 5 mm thick). The heating side of the box may be protected with aluminium foil or a stainless steel plate.

4.2.2 *Gas burners*

A steel plate (thickness 1 mm to 3 mm) is placed inside one end of the trough and in contact with the wire gauze (figure 4-1). The plate is heated by means of two burners which are fixed to the trough support and are capable of maintaining the plate at temperatures between 400°C and 600°C, i.e. dull red heat.

4.2.3 To prevent heat transport along the outside of the trough, a heat shield consisting of a steel plate (2 mm thick) should be installed at about 50 mm from the end of the trough where the heating takes place.

4.2.4 The life of the apparatus may be prolonged if it is constructed of stainless steel throughout. This is particularly important in the case of the gauze trough.

4.2.5 Propagation may be measured using thermocouples in the substance and recording the time at which a sudden temperature rise occurs as the reaction front reaches the thermocouple.

4.3 *Procedure*

4.3.1 The apparatus should be set up under a fume hood to remove toxic decomposition gases or in an open area where the fumes can be readily dispersed. Although there is no explosion risk, when performing the test it is advisable to have a protective shield, e.g. of suitable transparent plastics, between the observer and the apparatus.

4.3.2 The trough is filled with the fertilizer in the form to be offered for shipment, and decomposition is initiated at one end, either electrically or by means of gas burners as described above. Heating should be continued until decomposition of the fertilizer is well established and propagation of the front (over approximately 30 mm to 50 mm) has been observed. In the case of products with high thermal stability, it may be necessary to continue heating for two hours. If fertilizers show a tendency to melt, the heating should be done with care, i.e. using a small flame.

4.3.3 About 20 min after the heating has been discontinued, the position of the decomposition front is noted. The position of the reaction front can be determined by difference in colour, e.g. brown (undecomposed fertilizer) to white (decomposed fertilizer), or by the temperature indicated by adjacent pairs of thermocouples which bracket the reaction front. The rate of propagation may be determined by observation and timing or from thermocouple records. It should be noted whether there is no propagation after heating is discontinued or whether propagation occurs throughout the substance.

4.4 *Test criteria and method of assessing results*

4.4.1 If propagation of the decomposition continues throughout the substance, the fertilizer is considered capable of showing self-sustaining decomposition.

4.4.2 If propagation does not continue throughout the substance, the fertilizer is considered to be free from the hazard of self-sustaining decomposition.

5 Description of the test of resistance to detonation

5.1 *Principle*

5.1.1 The test sample is confined in a steel tube and subjected to detonation shock from an explosive booster charge. Propagation of the detonation is determined from the degree of compression of lead cylinders on which the tube rests horizontally during the test.

5.2 *Sample preparation*

5.2.1 The test must be carried out on a representative sample of cargo. Before being tested for resistance to detonation, the whole mass of the sample is to be thermally cycled five times between 25°C and 50°C (± 1°C) in sealed tubes. The sample shall be maintained at the extreme temperatures, measured at the centre of the sample, for at least 1 hour during each thermal cycle and at 20°C (± 3°C) after complete cycling until tested.

5.3 *Materials*

Seamless steel tube to ISO 65-1981-Heavy or equivalent

Tube length	1,000 mm
Nominal external diameter	114 mm
Nominal wall thickness	5 to 6.5 mm

Bottom plate (160 x 160 mm) of good weldable quality, thickness 5 to 6 mm to be butt-welded to one end of the tube around the entire circumference.

Initiation system and booster

Electrical blasting cap or detonating cord with non-metallic sleeve (10 to 13 g/m).

Compressed pellet of secondary explosive, such as hexogen/wax 95/5 or tetryl, with a central recess to take the detonator.

500 ± 1 gramme plastic explosive containing 83 to 86% penthrite, formed into a cylinder in a cardboard or plastic tube. Detonation velocity 7,300 to 7,700 m/s.

Six witness cylinders of refined, cast lead for detecting detonation.

50 mm diameter x 100 mm high, refined lead of at least 99.5% purity.

5.4 *Procedure*

Test temperature: 15 to 20°C. Figures 1 and 2 show the test arrangement.

Fill the tube about one-third of its height with the test sample and drop it 10 cm vertically five times on the floor. Improve the compression by striking the side wall with a hammer between drops. A further addition shall be made such that, after compaction or by raising and dropping the tube 20 times and a total of 20 intermittent hammer blows, the charge fills the tube to a distance of 70 mm from its orifice.

Insert the plastic explosive into the tube and press it down with a wooden die. Place the compressed pellet centrally in the recess within the plastic explosive. Close it with a wooden disc so that it remains in contact with the test sample. Lay the test tube horizontally on the 6 lead cylinders placed at 150 mm intervals (centric), with the centre of the last cylinder 75 mm from the bottom plate, on a firm, level, solid surface that is resistant to deformation or displacement. Insert the electrical blasting cap or the detonating cord.

Ensure that all necessary safety precautions are taken, connect and detonate the explosive.

Record, for each of the lead cylinders, the degree of compression expressed as a percentage of the original height of 100 mm. For oblique compression, the deformation is taken as the average of the maximum and minimum deformation.

5.5 *Results*

The test is to be carried out twice. If in each test one or more of the supporting lead cylinders are crushed by less than 5%, the sample is deemed to satisfy the resistance to detonation requirements.

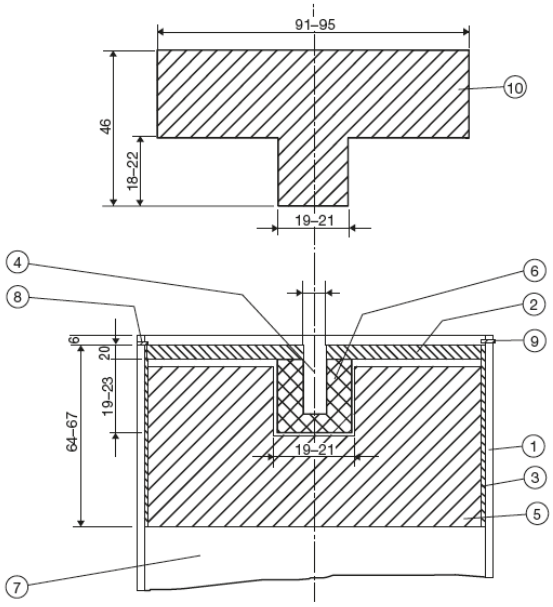

Dimensions in mm

①	Steel tube	⑥	Compressed pellet
②	Wooden disc	⑦	Test sample
③	Plastic or cardboard cylinder	⑧	4 mm diameter hole drilled to receive split pin (9)
④	Wooden rod	⑨	Split pin
⑤	Plastic explosive	⑩	Wooden die for (5) diameter as for detonator

Figure 1 – *Booster charge*

① Steel tube

② Lead cylinders

③ Steel block

④ Bottom plate

⑤ Booster charge

[1] to [6] numbers of lead cylinders

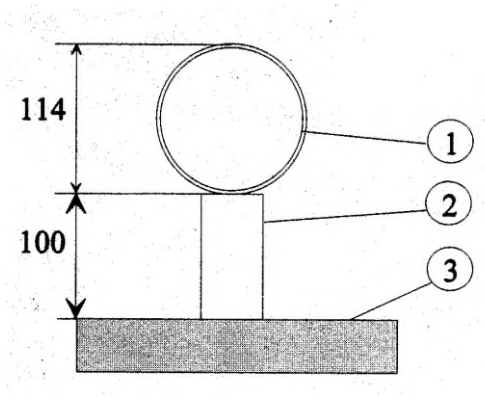

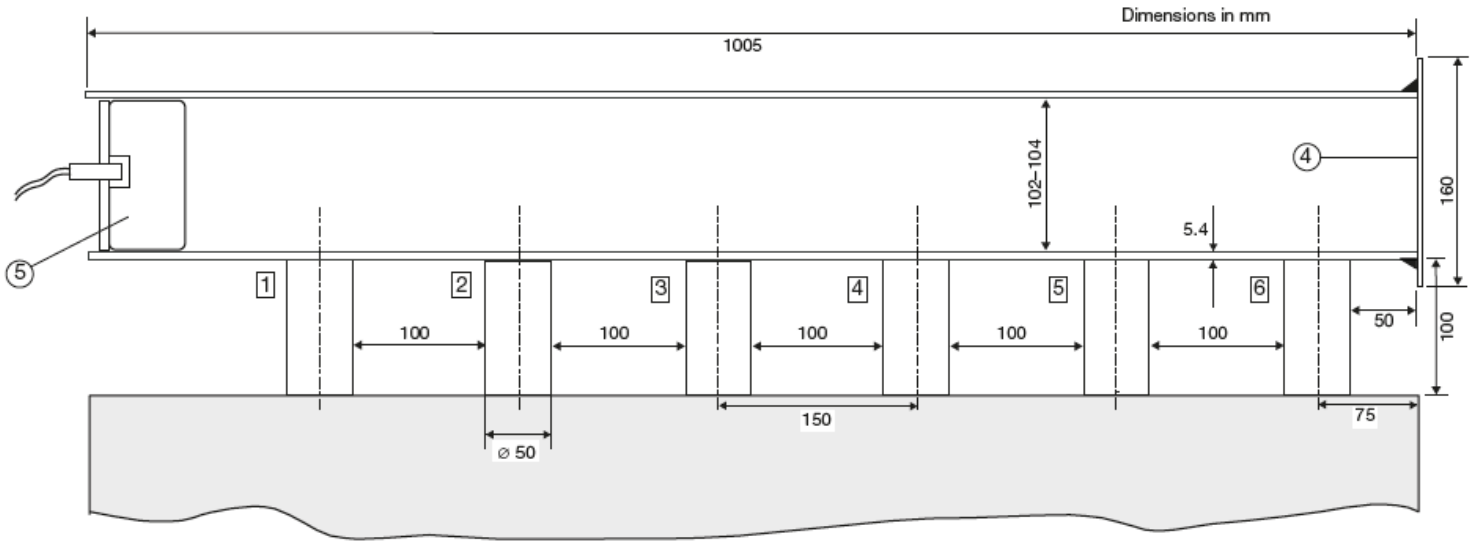

Figure 2 – ***Positioning of the steel tube on the firing site***

6 Self-heating test for charcoal

6.1 *Apparatus*

6.1.1 *Oven*. A laboratory oven fitted with internal air circulation and capable of being controlled at 140°C ± 2°C.

6.1.2 *Wire mesh cube*. Construct an open-top cube, 100 mm side, from phosphor bronze gauze 18,000 mesh per square centimetre (350 x 350 mesh). Insert it inside a slightly larger, well-fitting cube, made of phosphor bronze gauze 11 mesh per square centimetre (8 x 8 mesh). Fit the outer cube with a handle or hooks so that it can be suspended from above.

6.1.3 *Temperature measurement*. A suitable system to measure and record the temperature of the oven and in the centre of the cube. "Chromel-alumel" thermocouples, made from 0.27 mm diameter wire, are suitable for measuring the temperature range expected.

6.2 *Procedure*

6.2.1 Fill the cube with carbon and tap down gently, adding carbon until the cube is full. Suspend the sample in the centre of the oven which has been preheated to 140°C ± 2°C. Insert one of the thermocouples in the centre of the sample and the other between the cube and the oven wall. Maintain the temperature of the oven at 140°C ± 2°C for 12 hours and record the oven temperature and the sample temperature.

6.3 *Results*

6.3.1 Non-activated carbon, non-activated charcoal, carbon black and lamp black fail the test if the temperature at any time during the 12 hours exceeded 200°C.

6.3.2 Activated carbon and activated charcoal fail the test if the temperature at any time during the 12 hours exceeded 400°C.

APPENDIX 3

PROPERTIES OF SOLID BULK CARGOES

1 Non-cohesive cargoes

1.1 The following cargoes are non-cohesive when dry:

ALUMINIUM FLUORIDE
AMMONIUM NITRATE
AMMONIUM NITRATE BASED FERTILIZERS (TYPE A, TYPE B and NON-HAZARDOUS)
AMMONIUM SULPHATE
BORAX**,** ANHYDROUS
BRUCITE
CALCIUM NITRATE FERTILIZER
CHLORITE
DIAMMONIUM PHOSPHATE
FERRONICKEL SLAG (granulated)
FLUE DUST, CONTAINING LEAD AND ZINC
GRAIN SCREENING PELLETS
GRANULAR FERROUS SULPHATE
MAGNESIUM SULPHATE FERTILIZERS
MONOAMMONIUM PHOSPHATE
MONOAMMONIUM PHOSPHATE (M.A.P.), MINERAL ENRICHED COATING
MONOCALCIUMPHOSPHATE (MCP)
OLIVINE GRANULAR AND GRAVEL AGGREGATE PRODUCTS
OLIVINE SAND
POTASH
POTASSIUM CHLORIDE
POTASSIUM NITRATE
POTASSIUM SULPHATE
SAND, MINERAL CONCENTRATE, RADIOACTIVE MATERIAL, LOW SPECIFIC ACTIVITY (LSA-I) UN 2912
SEED CAKES AND OTHER RESIDUES OF PROCESSED OILY VEGETABLES (group B)*
SEED CAKES AND OTHER RESIDUES OF PROCESSED OILY VEGETABLES (group C)*
SODIUM NITRATE AND POTASSIUM NITRATE MIXTURE
SPODUMENE (UPGRADED)
SUGARCANE BIOMASS PELLETS
SUPERPHOSPHATE
SYNTHETIC SILICON DIOXIDE
TAPIOCA
UREA
WOOD PELLETS CONTAINING ADDITIVES AND/OR BINDERS
WOOD PELLETS NOT CONTAINING ANY ADDITIVES AND/OR BINDERS
WOOD TORREFIED

* Some cargoes in pelletized form may be non-cohesive.

1.2 Prior to completion of loading, the angle of repose of the materials to be loaded should be determined (see section 6) so as to determine which provisions of this Code relating to trimming apply (see section 5).

1.3 All cargoes, other than those listed in this appendix, are cohesive and the use of the angle of repose is, therefore, not appropriate. Cargoes not listed should be treated as cohesive until otherwise shown.

2 Cargoes which may liquefy

2.1 Many fine-particled cargoes, if possessing a sufficiently high moisture content, are liable to flow. Thus any damp or wet cargo containing a proportion of fine particles should be tested for flow characteristics prior to loading.

3 Precautions for the cargoes which may possess a chemical hazard

3.1 In circumstances where consultation with the competent authority is required prior to shipment of dry bulk cargoes, it is equally important to consult authorities at the port of loading and discharge concerning requirements which may be in force.

3.2 Where required, the Medical First Aid Guide for Use in Accidents Involving Dangerous Goods (MFAG) should be consulted prior to loading.

APPENDIX 4

INDEX

MATERIAL	Group	REFERENCES
ALFALFA	C	
ALUMINA	C	
ALUMINA, CALCINED	C	
ALUMINA HYDRATE	A and B	
ALUMINA SILICA	C	
ALUMINA SILICA, pellets	C	
Aluminium dross	B	*see* ALUMINIUM SMELTING BY-PRODUCTS or ALUMINIUM REMELTING BY-PRODUCTS UN 3170
ALUMINIUM FERROSILICON POWDER UN 1395	B	
ALUMINIUM FLUORIDE	A	
Aluminium hydroxide	A and B	*see* ALUMINA HYDRATE
ALUMINIUM NITRATE UN 1438	B	
ALUMINIUM REMELTING BY-PRODUCTS UN 3170	B	
Aluminium salt slags	B	*see* ALUMINIUM SMELTING BY-PRODUCTS or ALUMINIUM REMELTING BY-PRODUCTS UN 3170
ALUMINIUM SILICON POWDER, UNCOATED UN 1398	B	
Aluminium skimmings	B	*see* ALUMINIUM SMELTING BY-PRODUCTS or ALUMINIUM REMELTING BY-PRODUCTS UN 3170
ALUMINIUM SMELTING BY-PRODUCTS UN 3170	B	
ALUMINIUM SMELTING/REMELTING BY-PRODUCTS, PROCESSED	A and B	
AMMONIUM NITRATE UN 1942	B	
AMMONIUM NITRATE BASED FERTILIZER UN 2067	B	
AMMONIUM NITRATE BASED FERTILIZER UN 2071	B	
AMMONIUM NITRATE BASED FERTILIZER (non-hazardous)	C	
AMMONIUM SULPHATE	C	
AMORPHOUS SODIUM SILICATE LUMPS	B	
ANTIMONY ORE AND RESIDUE	C	
Antimony ore residue	C	*see* ANTIMONY ORE AND RESIDUE
Bakery materials	B or C	*see* SEED CAKE or SEED CAKES AND OTHER RESIDUES OF PROCESSED OILY VEGETABLES
BARIUM NITRATE UN 1446	B	

MATERIAL	Group	REFERENCES
Barley malt pellets	B or C	*see* SEED CAKE or SEED CAKES AND OTHER RESIDUES OF PROCESSED OILY VEGETABLES
BARYTES	C	
BAUXITE	C	
BAUXITE FINES	A	
Beach iron	C	*see* IRON SMELTING BY-PRODUCTS
Beet, expelled	B or C	*see* SEED CAKE or SEED CAKES AND OTHER RESIDUES OF PROCESSED OILY VEGETABLES
Beet, extracted	B or C	*see* SEED CAKE or SEED CAKES AND OTHER RESIDUES OF PROCESSED OILY VEGETABLES
BIOSLUDGE	C	
Blende (zinc sulphide)	A	*see* ZINC CONCENTRATE
BORAX (PENTAHYDRATE CRUDE)	C	
BORAX, ANHYDROUS, crude	C	
BORAX, ANHYDROUS, refined	C	
BORIC ACID	B	
Bottom ash	A and B	*see* CLINKER ASH
Bran pellets	B or C	*see* SEED CAKE or SEED CAKES AND OTHER RESIDUES OF PROCESSED OILY VEGETABLES
Brewer's grain pellets	B or C	*see* SEED CAKE or SEED CAKES AND OTHER RESIDUES OF PROCESSED OILY VEGETABLES
BROWN COAL BRIQUETTES	B	
BRUCITE	C	
Calcined clay	C	*see* ALUMINA, CALCINED
Calcined pyrites	A and B	*see* PYRITES, CALCINED
Calcium fluoride	A and B	*see* FLUORSPAR
CALCIUM FLUORIDE, CALCIUM SULPHATE, CALCIUM CARBONATE MIXTURE	A	
CALCIUM NITRATE UN 1454	B	
CALCIUM NITRATE FERTILIZER	C	
Calcium oxide	B	*see* LIME (UNSLAKED)
Canola pellets	B or C	*see* SEED CAKE or SEED CAKES AND OTHER RESIDUES OF PROCESSED OILY VEGETABLES
CARBORUNDUM	C	
CASTOR BEANS UN 2969	B	
CASTOR FLAKE UN 2969	B	
CASTOR MEAL UN 2969	B	

MATERIAL	Group	REFERENCES
CASTOR POMACE UN 2969	B	
CEMENT	C	
CEMENT CLINKERS	C	
CEMENT COPPER	A	*see* Mineral Concentrates schedule
Chalcopyrite	A	*see* COPPER CONCENTRATE
CHAMOTTE	C	
CHARCOAL	B	
CHEMICAL GYPSUM	A	
CHLORITE	C	
CHOPPED RUBBER AND PLASTIC INSULATION	C	
Chile saltpetre	B	*see* SODIUM NITRATE
Chilean natural nitrate	B	*see* SODIUM NITRATE
Chilean natural potassic nitrate	B	*see* SODIUM NITRATE AND POTASSIUM NITRATE MIXTURE
Chrome ore	C	*see* CHROMITE ORE
CHROME PELLETS	C	
CHROMITE ORE	C	
Chromium ore	C	*see* CHROMITE ORE
Citrus pulp pellets	B or C	*see* SEED CAKE or SEED CAKES AND OTHER RESIDUES OF PROCESSED OILY VEGETABLES
CLAY	C	
CLINKER ASH	A and B	
COAL	B (and A)	
COAL SLURRY	A	
COAL TAR PITCH	B	
COARSE CHOPPED TYRES	C	
COARSE IRON AND STEEL SLAG AND ITS MIXTURE	C	
Coconut	B or C	*see* SEED CAKE or SEED CAKES AND OTHER RESIDUES OF PROCESSED OILY VEGETABLES
COKE	C	
COKE BREEZE	A	
COLEMANITE	C	
COPPER CONCENTRATE	A	*see* Mineral Concentrates schedule
COPPER GRANULES	C	
COPPER MATTE	C	
Copper nickel	A	*see* NICKEL CONCENTRATE
Copper ore concentrate	A	*see* COPPER CONCENTRATE
Copper precipitate	A	*see* CEMENT COPPER
COPPER SLAG	A	
COPRA (dry) UN 1363	B	
Copra, expelled	B or C	*see* SEED CAKE or SEED CAKES AND OTHER RESIDUES OF PROCESSED OILY VEGETABLES

MATERIAL	Group	REFERENCES
Copra, extracted	B or C	*see* SEED CAKE or SEED CAKES AND OTHER RESIDUES OF PROCESSED OILY VEGETABLES
Corn gluten	B or C	*see* SEED CAKE or SEED CAKES AND OTHER RESIDUES OF PROCESSED OILY VEGETABLES
Cotton seed	B or C	*see* SEED CAKE or SEED CAKES AND OTHER RESIDUES OF PROCESSED OILY VEGETABLES
CRUSHED CARBON ANODES	C	
CRYOLITE	C	
Deadburned magnesite	C	*see* MAGNESIA (DEADBURNED)
DIAMMONIUM PHOSPHATE	C	
DIRECT REDUCED IRON (A) Briquettes, hot-moulded	B	
DIRECT REDUCED IRON (B) Lumps, pellets, cold-moulded briquettes	B	
DIRECT REDUCED IRON (C) By-product fines	B	
DISTILLERS DRIED GRAINS WITH SOLUBLES	C	
DOLOMITE	C	
Dolomitic quicklime	B	*see* LIME (UNSLAKED)
D.R.I.	B	*see* DIRECT REDUCED IRON (A) or (B) or (C)
Expellers	B or C	*see* SEED CAKE or SEED CAKES AND OTHER RESIDUES OF PROCESSED OILY VEGETABLES
FELSPAR LUMP	C	
FERROCHROME	C	
FERROCHROME, exothermic	C	
FERROMANGANESE	C	
Ferromanganese, exothermic	C	*see* FERROMANGANESE
FERRONICKEL	C	
FERRONICKEL SLAG (granulated)	C	
FERROPHOSPHORUS	B	
Ferrophosphorus briquettes	B	*see* FERROPHOSPHORUS
FERROSILICON UN 1408	B	
FERROSILICON	B	
FERROUS METAL BORINGS UN 2793	B	
FERROUS METAL CUTTINGS UN 2793	B	
FERROUS METAL SHAVINGS UN 2793	B	
FERROUS METAL TURNINGS UN 2793	B	
FERROUS SULPHATE HEPTAHYDRATE	C	
FERTILIZERS WITHOUT NITRATES	C	
FISH (IN BULK)	A	

MATERIAL	Group	REFERENCES
FISHMEAL, STABILIZED UN 2216	B	
FISHSCRAP, STABILIZED UN 2216	B	
Flat iron	C	*see* IRON SMELTING BY-PRODUCTS
Flint flat glass cullet	C	*see* GLASS CULLET
FLUE DUST, CONTAINING LEAD AND ZINC	A and B	
FLUORSPAR	A and B	
FLY ASH, DRY	C	
FLY ASH, WET	A	
FOAM GLASS GRAVEL	C	
Foundry sand	C	*See* SAND
Galena (lead sulphide)	A	*see* LEAD CONCENTRATE
Garbage tankage	B	*see* TANKAGE
GLASS CULLET	C	
Gluten pellets	B or C	*see* SEED CAKE or SEED CAKES AND OTHER RESIDUES OF PROCESSED OILY VEGETABLES
GRAIN SCREENING PELLETS	C	
GRANULAR FERROUS SULPHATE	C	
Granulated iron	C	*see* IRON SMELTING BY-PRODUCTS
GRANULATED NICKEL MATTE (LESS THAN 2% MOISTURE CONTENT)	B	
GRANULATED SLAG	C	
GRANULATED TYRE RUBBER	C	
Ground nuts, meal	B or C	*see* SEED CAKE or SEED CAKES AND OTHER RESIDUES OF PROCESSED OILY VEGETABLES
GYPSUM	C	
GYPSUM GRANULATED	C	
Hominy chop	B or C	*see* SEED CAKE or SEED CAKES AND OTHER RESIDUES OF PROCESSED OILY VEGETABLES
ILMENITE CLAY	A	
ILMENITE (ROCK)	C	
ILMENITE SAND	A	
ILMENITE (UPGRADED)	A	
IRON AND STEEL SLAG AND ITS MIXTURE	A	
IRON CONCENTRATE	A	*see* Mineral Concentrates schedule
IRON CONCENTRATE (pellet feed)	A	*see* Mineral Concentrates schedule
IRON CONCENTRATE (sinter feed)	A	*see* Mineral Concentrates schedule
Iron disulphide	C	*see* PYRITE
IRON ORE	C	
Iron ore (concentrate, pellet feed, sinter feed)	A	*see* IRON CONCENTRATE (pellet feed or sinter feed)
IRON ORE FINES	A	
IRON ORE PELLETS	C	

MATERIAL	Group	REFERENCES
IRON OXIDE, SPENT UN 1376	B	
IRON OXIDE TECHNICAL	A	
Iron pan edges	C	*see* IRON SMELTING BY-PRODUCTS
Iron silicate granulated	A	*See* COPPER SLAG
IRON SINTER	C	
Iron skulls	C	*see* IRON SMELTING BY-PRODUCTS
IRON SMELTING BY-PRODUCTS	C	
IRON SPONGE, SPENT UN 1376	B	
Iron swarf	B	*see* FERROUS METAL BORINGS, SHAVINGS, TURNINGS OR CUTTINGS UN 2793
IRONSTONE	C	
K1-K3 bears	C	*see* IRON SMELTING BY-PRODUCTS
LABRADORITE	C	
LEAD AND ZINC CALCINES (mixed)	A	*see* Mineral Concentrates schedule
LEAD AND ZINC MIDDLINGS	A	*see* Mineral Concentrates schedule
LEAD CONCENTRATE	A	*see* Mineral Concentrates schedule
LEAD NITRATE UN 1469	B	
LEAD ORE	C	
Lead ore concentrate	A	*see* LEAD CONCENTRATE
LEAD ORE RESIDUE	A	*see* Mineral Concentrates schedule
LEAD SILVER CONCENTRATE	A	*see* Mineral Concentrates schedule
Lead silver ore	A	*see* LEAD SILVER CONCENTRATE
Lead sulphide	A	*see* LEAD CONCENTRATE
Lead sulphide (galena)	A	*see* LEAD CONCENTRATE
Lignite	B	*see* BROWN COAL BRIQUETTES
LIME (UNSLAKED)	B	
LIMESTONE	C	
LINTED COTTON SEED	B	
Linseed, expelled	B or C	*see* SEED CAKE or SEED CAKES AND OTHER RESIDUES OF PROCESSED OILY VEGETABLES
Linseed, extracted	B or C	*see* SEED CAKE or SEED CAKES AND OTHER RESIDUES OF PROCESSED OILY VEGETABLES
LOGS	B	*see* Wood Products – General schedule
MAGNESIA (DEADBURNED)	C	
MAGNESIA (UNSLAKED)	B	
Magnesia, clinker	C	*see* MAGNESIA (DEADBURNED)
Magnesia, electro-fused	C	*see* MAGNESIA (DEADBURNED)
Magnesia lightburned	B	*see* MAGNESIA (UNSLAKED)
Magnesia calcined	B	*see* MAGNESIA (UNSLAKED)
Magnesia caustic calcined	B	*see* MAGNESIA (UNSLAKED)
Magnesite clinker	C	*see* MAGNESIA (DEADBURNED)
MAGNESITE, natural	C	

MATERIAL	Group	REFERENCES
Magnesium carbonate	C	*see* MAGNESITE, natural
MAGNESIUM NITRATE UN 1474	B	
MAGNESIUM SULPHATE FERTILIZERS	C	
Maize, expelled	B or C	*see* SEED CAKE or SEED CAKES AND OTHER RESIDUES OF PROCESSED OILY VEGETABLES
Maize, extracted	B or C	*see* SEED CAKE or SEED CAKES AND OTHER RESIDUES OF PROCESSED OILY VEGETABLES
MANGANESE COMPONENT FERROALLOY SLAG	C	
MANGANESE CONCENTRATE	A	*see* Mineral Concentrates schedule
MANGANESE ORE	C	
MANGANESE ORE FINES	A	
M.A.P.	C	*see* MONOAMMONIUM PHOSPHATE
MARBLE CHIPS	C	
MATTE CONTAINING COPPER AND LEAD	B	
Meal, oily	B or C	*see* SEED CAKE or SEED CAKES AND OTHER RESIDUES OF PROCESSED OILY VEGETABLES
METAL SULPHIDE CONCENTRATES	A and B	
METAL SULPHIDE CONCENTRATES, CORROSIVE UN 1759	A and B	
METAL SULPHIDE CONCENTRATES, SELF-HEATING UN 3190	A and B	
Mill feed pellets	B or C	*see* SEED CAKE or SEED CAKES AND OTHER RESIDUES OF PROCESSED OILY VEGETABLES
Milorganite	C	*see* BIOSLUDGE
Mineral Concentrates	A	
MONOAMMONIUM PHOSPHATE	C	
MONOAMMONIUM PHOSPHATE (M.A.P.), MINERAL ENRICHED COATING	B	
MONOCALCIUMPHOSPHATE (MCP)	A and B	
Muriate of potash	C	*see* POTASSIUM CHLORIDE
NEFELINE SYENITE (mineral)	A	*see* Mineral Concentrates schedule
NICKEL CONCENTRATE	A	*see* Mineral Concentrates schedule
NICKEL ORE	A	
Nickel ore concentrate	A	*see* NICKEL CONCENTRATE
Niger seed, expelled	B or C	*see* SEED CAKE or SEED CAKES AND OTHER RESIDUES OF PROCESSED OILY VEGETABLES
Niger seed, extracted	B or C	*see* SEED CAKE or SEED CAKES AND OTHER RESIDUES OF PROCESSED OILY VEGETABLES

MATERIAL	Group	REFERENCES
Oil cake	B or C	*see* SEED CAKE or SEED CAKES AND OTHER RESIDUES OF PROCESSED OILY VEGETABLES
OLIVINE GRANULAR AND GRAVEL AGGREGATE PRODUCTS	C	
OLIVINE SAND	A	
Palm kernel, expelled	B or C	*see* SEED CAKE or SEED CAKES AND OTHER RESIDUES OF PROCESSED OILY VEGETABLES
Palm kernel, extracted	B or C	*see* SEED CAKE or SEED CAKES AND OTHER RESIDUES OF PROCESSED OILY VEGETABLES
Peanuts, expelled	B or C	*see* SEED CAKE or SEED CAKES AND OTHER RESIDUES OF PROCESSED OILY VEGETABLES
Peanuts, extracted	B or C	*see* SEED CAKE or SEED CAKES AND OTHER RESIDUES OF PROCESSED OILY VEGETABLES
PEANUTS (in shell)	C	
PEAT MOSS	A and B	
PEBBLES (sea)	C	
PELLETS (concentrates)	C	
Pellets, cereal	B or C	*see* SEED CAKE or SEED CAKES AND OTHER RESIDUES OF PROCESSED OILY VEGETABLES
Pencil pitch	B	*see* PITCH PRILL
PENTAHYDRATE CRUDE	A	*see* Mineral Concentrates schedule
PERLITE ROCK	C	
PETROLEUM COKE (calcined)	B	
PETROLEUM COKE (uncalcined)	B	
PHOSPHATE ROCK (calcined)	C	
PHOSPHATE ROCK (uncalcined)	C	
PHOSPHATE (defluorinated)	C	
PIG IRON	C	
Pig iron by-product	C	*see* IRON SMELTING BY-PRODUCTS
PITCH PRILL	B	
Plate iron	C	*see* IRON SMELTING BY-PRODUCTS
Pollard pellets	B or C	*see* SEED CAKE or SEED CAKES AND OTHER RESIDUES OF PROCESSED OILY VEGETABLES
Pool iron	C	*see* IRON SMELTING BY-PRODUCTS
POTASH	C	

MATERIAL	Group	REFERENCES
Potash muriate	C	*see* POTASSIUM CHLORIDE
POTASSIUM CHLORIDE	C	
Potassium felspar sand	C	*see* SAND
POTASSIUM NITRATE UN 1486	B	
Potassium nitrate/sodium nitrate (mixture)	B	*see* SODIUM NITRATE AND POTASSIUM NITRATE MIXTURE UN 1499
POTASSIUM SULPHATE	C	
Prilled coal tar	B	*see* PITCH PRILL
PULP WOOD	B	*see* Wood Products – General schedule
PUMICE	C	
PYRITE (containing copper and iron)	C	
PYRITES, CALCINED	A and B	
PYRITES	A	*see* Mineral Concentrates schedule
Pyrites (cupreous, fine, flotation or sulphur)	A	*see* PYRITES
Pyritic ash	A and B	*see* PYRITES, CALCINED
PYRITIC ASHES (iron)	A	*see* Mineral Concentrates schedule
PYRITIC CINDERS	A	*see* Mineral Concentrates schedule
PYROPHYLLITE	C	
QUARTZ	C	
Quartz sand	C	*see* SAND
QUARTZITE	C	
Quicklime	B	*see* LIME (UNSLAKED)
RADIOACTIVE MATERIAL, LOW SPECIFIC ACTIVITY (LSA-I) UN 2912	B	
RADIOACTIVE MATERIAL, SURFACE CONTAMINATED OBJECTS (SCO-I) UN 2913	B	
Rape seed, expelled	B or C	*see* SEED CAKE or SEED CAKES AND OTHER RESIDUES OF PROCESSED OILY VEGETABLES
Rape seed, extracted	B or C	*see* SEED CAKE or SEED CAKES AND OTHER RESIDUES OF PROCESSED OILY VEGETABLES
RASORITE (ANHYDROUS)	C	
Rice bran	B or C	*see* SEED CAKE or SEED CAKES AND OTHER RESIDUES OF PROCESSED OILY VEGETABLES
Rice broken	B or C	*see* SEED CAKE or SEED CAKES AND OTHER RESIDUES OF PROCESSED OILY VEGETABLES
Rough ammonia tankage	B	*see* TANKAGE
ROUNDWOOD	B	*see* Wood Products – General schedule
RUTILE SAND	C	

MATERIAL	Group	REFERENCES
Safflower seed, expelled	B or C	*see* SEED CAKE or SEED CAKES AND OTHER RESIDUES OF PROCESSED OILY VEGETABLES
Safflower seed, extracted	B or C	*see* SEED CAKE or SEED CAKES AND OTHER RESIDUES OF PROCESSED OILY VEGETABLES
SALT	C	
SALT CAKE	C	
SALT ROCK	C	
Saltpetre	B	*see* POTASSIUM NITRATE
SAND	C	
SAND, HEAVY MINERAL	A	
Sand, ilmenite	C	*see* ILMENITE SAND
SAND, MINERAL CONCENTRATE, RADIOACTIVE MATERIAL, LOW SPECIFIC ACTIVITY (LSA-I) UN 2912	A and B	
Sand, zircon	C	*see* ZIRCON SAND
SAWDUST	B	
SAW LOGS	B	*see* Wood Products – General schedule
SCALE GENERATED FROM THE IRON AND STEEL MAKING PROCESS	A	
SCRAP METAL	C	
SEED CAKE, containing vegetable oil UN 1386 (a) mechanically expelled seeds, containing more than 10% of oil or more than 20% of oil and moisture combined	B	
SEED CAKE, containing vegetable oil UN 1386 (b) solvent extraction and expelled seeds, containing not more than 10% of oil and when the amount of moisture is higher than 10%, not more than 20% of oil and moisture combined	B	
SEED CAKE UN 2217	B	
SEED CAKES AND OTHER RESIDUES OF PROCESSED OILY VEGETABLES	B	
SEED CAKES AND OTHER RESIDUES OF PROCESSED OILY VEGETABLES	C	
Seed expellers, oily	B or C	*see* SEED CAKE or SEED CAKES AND OTHER RESIDUES OF PROCESSED OILY VEGETABLES
Separation of iron	C	*see* IRON SMELTING BY-PRODUCTS
Silica sand	C	*see* SAND
SILICOMANGANESE (carbo-thermic)	C	
SILICOMANGANESE (low carbon)	B	
Silicon dross	C	*see* SILICON SLAG
SILICON SLAG	C	

MATERIAL	Group	REFERENCES
SILVER LEAD CONCENTRATE	A	*see* Mineral Concentrates schedule
Silver lead ore concentrate	A	*see* SILVER LEAD CONCENTRATE
Sinter	A	*see* ZINC AND LEAD CALCINES (mixed)
Slag, granulated	C	*see* GRANULATED SLAG
SLIG (iron ore)	A	*see* Mineral Concentrates schedule
SODA ASH	C	
Soda feldspar sand	C	*see* SAND
SODIUM NITRATE UN 1498	B	
SODIUM NITRATE AND POTASSIUM NITRATE MIXTURE UN 1499	B	
SOLIDIFIED FUELS RECYCLED FROM PAPER AND PLASTICS	B	
Soyabean, expelled	B or C	*see* SEED CAKE or SEED CAKES AND OTHER RESIDUES OF PROCESSED OILY VEGETABLES
Soyabean, extracted	B or C	*see* SEED CAKE or SEED CAKES AND OTHER RESIDUES OF PROCESSED OILY VEGETABLES
Spent cathodes	B	*see* ALUMINIUM SMELTING BY-PRODUCTS or ALUMINIUM REMELTING BY-PRODUCTS UN 3170
Spent potliner	B	*see* ALUMINIUM SMELTING BY-PRODUCTS or ALUMINIUM REMELTING BY-PRODUCTS UN 3170
Spodumene	C	*see* SAND
SPODUMENE (UPGRADED)	A	
STAINLESS STEEL GRINDING DUST	C	
Steel bears	C	*see* IRON SMELTING BY-PRODUCTS
Steel swarf	B	*see* FERROUS METAL BORINGS, SHAVINGS, TURNINGS OR CUTTINGS UN 2793
Stibnite	C	*see* ANTIMONY ORE AND RESIDUE
STONE CHIPPINGS	C	
Strussa pellets	B or C	*see* SEED CAKE or SEED CAKES AND OTHER RESIDUES OF PROCESSED OILY VEGETABLES
SUGAR	C	
SUGARCANE BIOMASS PELLETS	B	
SULPHATE OF POTASH AND MAGNESIUM	C	
Sulphide concentrates	B	*see* METAL SULPHIDE CONCENTRATES
SULPHUR UN 1350 (crushed lump and coarse grained)	B	

MATERIAL	Group	REFERENCES
SULPHUR (formed, solid)	C	
Sunflower seed, expelled	B or C	*see* SEED CAKE or SEED CAKES AND OTHER RESIDUES OF PROCESSED OILY VEGETABLES
Sunflower seed, extracted	B or C	*see* SEED CAKE or SEED CAKES AND OTHER RESIDUES OF PROCESSED OILY VEGETABLES
SUPERPHOSPHATE	C	
SUPERPHOSPHATE (triple, granular)	C	
Swarf	B	*see* FERROUS METAL BORINGS, SHAVINGS, TURNINGS OR CUTTINGS UN 2793
SYNTHETIC CALCIUM FLUORIDE	A	
SYNTHETIC SILICON DIOXIDE	A	
TACONITE PELLETS	C	
TALC	C	
TANKAGE	B	
Tankage fertilizer	B	*see* TANKAGE
TAPIOCA	C	
TIMBER	B	*see* Wood Products – General schedule
TITANOMAGNETITE SAND	A	
Toasted meals	B or C	*see* SEED CAKE or SEED CAKES AND OTHER RESIDUES OF PROCESSED OILY VEGETABLES
Triple superphosphate	C	*see* SUPERPHOSPHATE (triple, granular)
UREA	C	
VANADIUM ORE	B	
VERMICULITE	C	
WHITE QUARTZ	C	
WOODCHIPS	B	
WOOD PELLETS CONTAINING ADDITIVES AND/OR BINDERS	B	
WOOD PELLETS NOT CONTAINING ANY ADDITIVES AND/OR BINDERS	B	
Wood Products – General	B	
WOOD TORREFIED	B	
ZINC AND LEAD CALCINES (mixed)	A	*see* Mineral Concentrates schedule
ZINC AND LEAD MIDDLINGS	A	*see* Mineral Concentrates schedule
ZINC ASHES UN 1435	B	
ZINC CONCENTRATE	A	*see* Mineral Concentrates schedule
Zinc, dross, residue or skimmings	B	*see* ZINC ASHES UN 1435
Zinc ore, burnt	A	*see* ZINC CONCENTRATE
Zinc ore, calamine	A	*see* ZINC CONCENTRATE
Zinc ore, concentrates	A	*see* ZINC CONCENTRATE
Zinc ore, crude	A	*see* ZINC CONCENTRATE
ZINC OXIDE ENRICHED FLUE DUST	A and B	

MATERIAL	Group	REFERENCES
ZINC SINTER	A	*see* Mineral Concentrates schedule
ZINC SLAG	A	
ZINC SLUDGE	A	*see* Mineral Concentrates schedule
Zinc sulphide	A	*see* ZINC CONCENTRATE
Zinc sulphide (blende)	A	*see* ZINC CONCENTRATE
ZIRCON KYANITE CONCENTRATE	A	
ZIRCONSAND	C	

APPENDIX 5

Bulk Cargo Shipping Names in three languages
(English, Spanish and French)

ENGLISH	FRENCH	SPANISH
ALFALFA	LUZERNE	ALFALFA
ALUMINA	ALUMINE	ALÚMINA
ALUMINA, CALCINED	ALUMINE CALCINÉE	ALÚMINA CALCINADA
ALUMINA HYDRATE	HYDRATE D'ALUMINE	HIDRATO DE ALÚMINA
ALUMINIUM FLUORIDE	FLUORURE D'ALUMINIUM	FLUORURO DE ALUMINIO
Aluminium hydroxide	Hydroxyde d'aluminium	Hidróxido de aluminio
ALUMINA SILICA	ALUMINE SILICEUSE	ALÚMINA SÍLICE
ALUMINA SILICA, pellets	ALUMINE SILICEUSE en granules	ALÚMINA SÍLICE, pellets de
Aluminium dross	Laitier d'aluminium	Residuos de aluminio
ALUMINIUM FERROSILICON POWDER UN 1395	ALUMINO-FERROSILICIUM EN POUDRE UN 1395	ALUMINIO-FERROSILICIO EN POLVO, UN 1395
ALUMINIUM NITRATE UN 1438	NITRATE D'ALUMINIUM UN 1438	NITRATO DE ALUMINIO, UN 1438
ALUMINIUM REMELTING BY-PRODUCTS UN 3170	SOUS-PRODUITS DE LA REFUSION DE L'ALUMINIUM UN 3170	PRODUCTOS DERIVADOS DE LA REFUNDICIÓN DEL ALUMINIO, UN 3170
Aluminium salt slags	Scories salines d'aluminium	Escoria de sales de aluminio
ALUMINIUM SMELTING/REMELTING BY-PRODUCTS, PROCESSED	SOUS-PRODUITS DE LA FABRICATION/REFUSION DE L'ALUMINIUM, TRAITÉS	PRODUCTOS DERIVADOS DE LA FUNDICIÓN DEL ALUMINIO o PRODUCTOS DERIVADOS DE LA REFUNDICIÓN DEL ALUMINIO, TRATADOS
ALUMINIUM SILICON POWDER, UNCOATED UN 1398	SILICO-ALUMINIUM EN POUDRE NON ENROBÉ UN 1398	ALUMINIO-SILICIO EN POLVO, NO RECUBIERTO, UN 1398
Aluminium skimmings	Crasse d'aluminium	Espuma de aluminio
ALUMINIUM SMELTING BY-PRODUCTS UN 3170	SOUS-PRODUITS DE LA FABRICATION DE L'ALUMINIUM UN 3170	PRODUCTOS DERIVADOS DE LA FUNDICIÓN DEL ALUMINIO, UN 3170
AMMONIUM NITRATE UN 1942	NITRATE D'AMMONIUM UN 1942	NITRATO AMÓNICO, UN 1942

ENGLISH	FRENCH	SPANISH
AMMONIUM NITRATE BASED FERTILIZER UN 2067	ENGRAIS AU NITRATE D'AMMONIUM UN 2067	ABONOS A BASE DE NITRATO AMÓNICO, UN 2067
AMMONIUM NITRATE BASED FERTILIZER UN 2071	ENGRAIS AU NITRATE D'AMMONIUM UN 2071	ABONOS A BASE DE NITRATO AMÓNICO, UN 2071
AMMONIUM NITRATE, BASED FERTILIZER (non-hazardous)	ENGRAIS AU NITRATE D'AMMONIUM (non dangereux)	ABONOS A BASE DE NITRATO AMÓNICO (no entrañan peligro)
AMMONIUM SULPHATE	SULFATE D'AMMONIUM	SULFATO AMÓNICO
AMORPHOUS SODIUM SILICATE LUMPS	MORCEAUX DE SILICATE DE SODIUM AMORPHE	TERRONES DE SILICATO SÓDICO AMORFO
ANTIMONY ORE AND RESIDUE	MINERAI D'ANTIMOINE ET RÉSIDU DE MINERAI D'ANTIMOINE	ANTIMONIO, MINERAL Y RESIDUOS DE
Bakery materials	Produits de boulangerie	Materias de panadería
BARIUM NITRATE UN 1446	NITRATE DE BARYUM UN 1446	NITRATO DE BARIO, UN 1446
Barley malt pellets	Malte d'orge en boulettes	Malta de cebada, pellets de
BARYTES	BARYTINE	BARITAS
BAUXITE	BAUXITE	BAUXITA
BAUXITE FINES	FINES DE BAUXITE	FINOS DE BAUXITA
Beach iron	Fer de type grès dit "beach iron"	Hierro de tipo arenisco conocido como "beach iron"
Beet, expelled	Betterave, triturée	Remolacha, prensada
Beet, extracted	Betterave, sous-produits de l'extraction	Remolacha, en extracto
BIOSLUDGE	BOUE ACTIVÉE	FANGOS BIOLÓGICOS
Blende (zinc sulphide)	Blende (sulfure de zinc)	Blenda (sulfuro de cinc)
BORAX (PENTAHYDRATE CRUDE)	BORAX (BRUT PENTAHYDRATÉ)	BÓRAX (CRUDO PENTAHIDRATADO)
BORAX, ANHYDROUS, crude	BORAX ANHYDRE brut	BÓRAX ANHIDRO, crudo
BORAX, ANHYDROUS, refined	BORAX ANHYDRE raffiné	BÓRAX ANHIDRO, refinado
BORIC ACID	ACIDE BORIQUE	ÁCIDO BÓRICO
Bottom ash	Cendres résiduelles	Cenizas de fondo
Bran pellets	Son en boulettes	Salvado, pellets de
Brewer's grain pellets	Drêches de brasserie en boulettes	Orujo de cerveza, pellets de
BROWN COAL BRIQUETTES	CHARBON BRUN EN BRIQUETTES	BRIQUETAS DE LIGNITO
BRUCITE	BRUCITE	BRUCITA

ENGLISH	FRENCH	SPANISH
Calcined clay	Argile calcinée	Arcilla calcinada
Calcined pyrites	Pyrites calcinées	Piritas calcinadas
Calcium fluoride	Fluorure de calcium	Fluoruro de calcio
CALCIUM FLUORIDE, CALCIUM SULPHATE, CALCIUM CARBONATE MIXTURE	MÉLANGE DE FLUORURE DE CALCIUM, DE SULFATE DE CALCIUM ET DE CARBONATE DE CALCIUM	FLUORURO DE CALCIO, SULFATO DE CALCIO Y CARBONATO DE CALCIO EN MEZCLA
CALCIUM NITRATE UN 1454	NITRATE DE CALCIUM UN 1454	NITRATO CÁLCICO, UN 1454
CALCIUM NITRATE FERTILIZER	ENGRAIS AU NITRATE DE CALCIUM	ABONOS A BASE DE NITRATO CÁLCICO
Calcium oxide	Oxyde de calcium	Óxido de calcio
Canola pellets	Canola en boulettes	Píldoras de canola
CARBORUNDUM	CARBORUNDUM	CARBORUNDO
CASTOR BEANS UN 2969	GRAINES DE RICIN UN 2969	SEMILLAS DE RICINO, UN 2969
CASTOR FLAKE UN 2969	GRAINES DE RICIN EN FLOCONS UN 2969	ESCAMAS DE RICINO, UN 2969
CASTOR MEAL UN 2969	FARINES DE RICIN UN 2969	HARINA DE RICINO, UN 2969
CASTOR POMACE UN 2969	TOURTEAUX DE RICIN UN 2969	PULPA DE RICINO, UN 2969
CEMENT	CIMENT	CEMENTO
CEMENT CLINKERS	CIMENT, CLINKERS DE	CEMENTO, CLINKERS DE
CEMENT COPPER	CUIVRE CÉMENT	COBRE DE CEMENTACIÓN
Chalcopyrite	Chalcopyrite	Calcopirita
CHAMOTTE	CHAMOTTE	CHAMOTA
CHARCOAL	CHARBON DE BOIS	CARBÓN VEGETAL
CHEMICAL GYPSUM	GYPSE DE SYNTHÈSE	YESO QUÍMICO
CHLORITE	CHLORITE	CLORITA
Chile saltpetre	Salpêtre du Chili	Salitre de Chile
Chilean natural nitrate	Nitrate naturel du Chili	Nitrato natural de Chile
Chilean natural potassic nitrate	Nitrate de potassium naturel du Chili	Nitrato potásico natural de Chile
CHOPPED RUBBER AND PLASTIC INSULATION	FRAGMENTS D'ISOLANT EN PLASTIQUE ET EN CAOUTCHOUC	FRAGMENTOS DE REVESTIMIENTOS AISLANTES DE GOMA Y PLÁSTICO
Chrome ore	Minerai de chrome	Cromo, mineral de
CHROME PELLETS	CHROME EN PELLETS	CROMO, PELLETS DE
CHROMITE ORE	MINERAI DE CHROMITE	CROMITA, MINERAL DE
Chromium ore	Minerai de chromium	Cromio, mineral de

ENGLISH	FRENCH	SPANISH
Citrus pulp pellets	Pulpe d'agrumes en boulettes	Cítricos, pellets de pulpa de
CLAY	ARGILE	ARCILLA
CLINKER ASH	CENDRES DE MÂCHEFER	CENIZAS DE CLÍNKER
COAL	CHARBON	CARBÓN
COAL SLURRY	BOUES DE CHARBON	FANGOS DE CARBÓN
COAL TAR PITCH	BRAI DE GOUDRON DE HOUILLE	BREA DE ALQUITRÁN DE HULLA
COARSE CHOPPED TYRES	FRAGMENTS DE PNEUS DE GRANDES DIMENSIONS	FRAGMENTOS DE NEUMÁTICOS TRITURADOS
COARSE IRON AND STEEL SLAG AND ITS MIXTURE	SCORIES DE FER ET D'ACIER À GROS GRAINS ET LEUR MÉLANGE	ESCORIA GRUESA DE HIERRO Y ACERO Y SU MEZCLA
Coconut	Noix de coco	Coco
COKE	COKE	COQUE
COKE BREEZE	POUSSIER DE COKE	CISCO DE COQUE
COLEMANITE	COLÉMANITE	COLEMANITA
COPPER CONCENTRATE	CONCENTRÉ DE CUIVRE	COBRE, CONCENTRADO DE
COPPER GRANULES	CUIVRE EN GRANULES	COBRE, GRÁNULOS DE
COPPER MATTE	MATTE DE CUIVRE	COBRE, MATA DE
Copper nickel	Nickel-cuivre	Cuproníquel
COPPER SLAG	SCORIES DE CUIVRE	ESCORIA DE COBRE
Copper ore concentrate	Concentré de minerai de cuivre	Cobre, concentrado mineral de
Copper precipitate	Précipités de cuivre	Cobre, precipitado de
COPRA (dry) UN 1363	COPRAH (sec) UN 1363	COPRA (seca), UN 1363
Copra, expelled	Coprah, trituré	Copra, prensada
Copra, extracted	Coprah, sous-produit d'extraction	Copra, en extracto
Corn gluten	Gluten de maïs	Maíz, gluten de
Cotton seed	Graines de cotonnier	Semillas de algodón
CRUSHED CARBON ANODES	ANODES EN CARBONE CONCASSÉES	ÁNODOS DE CARBÓN TRITURADOS
CRYOLITE	CRYOLITHE	CRIOLITA
Deadburned magnesite	Magnésite calcinée	Magnesita calcinada a muerte
DIAMMONIUM PHOSPHATE	HYDROGÉNOPHOSPHATE DE DIAMMONIUM	FOSFATO DIAMÓNICO
DIRECT REDUCED IRON (A) Briquettes, hot-moulded	FER OBTENU PAR RÉDUCTION DIRECTE (A) Briquettes moulées à chaud	HIERRO OBTENIDO POR REDUCCIÓN DIRECTA (A) Briquetas moldeadas en caliente

ENGLISH	FRENCH	SPANISH
DIRECT REDUCED IRON (B) Lumps, pellets, cold-moulded briquettes	FER OBTENU PAR RÉDUCTION DIRECTE (B) Morceaux, pellets, briquettes moulées à froid et tournures de fer indiennes	HIERRO OBTENIDO POR REDUCCIÓN DIRECTA (B) Terrones, pellets y briquetas moldeadas en frío
DIRECT REDUCED IRON (C) By-product fines	FER OBTENU PAR RÉDUCTION DIRECTE (C) (Fines en tant que sous-produit)	HIERRO OBTENIDO POR REDUCCIÓN DIRECTA (C) (Finos obtenidos como productos derivados)
DISTILLERS DRIED GRAINS WITH SOLUBLES	DISTILLATS SÉCHÉS DE GRAINS AVEC RÉSIDUS SOLUBLES	GRANOS SECOS DE DESTILERÍA CON SOLUBLES
DOLOMITE	DOLOMITE	DOLOMITA
Dolomitic quicklime	Chaux vive dolomitique	Cal dolomítica
D.R.I.	not applicable in French	HRD
Expellers	Expellers	Tortas de presión
FELSPAR LUMP	FELDSPATH EN MORCEAUX	FELDESPATO EN TERRONES
FERROCHROME	FERROCHROME	FERROCROMO
FERROCHROME, exothermic	FERROCHROME, exothermique	FERROCROMO exotérmico
FERROMANGANESE	FERROMANGANÈSE	FERROMANGANESO
Ferromanganese, exothermic	Ferromanganèse exothermique	Ferromanganeso exotérmico
FERRONICKEL	FERRONICKEL	FERRONÍQUEL
FERRONICKEL SLAG (granulated)	SCORIES DE FERRONICKEL (en granules)	ESCORIA DE FERRONÍQUEL (granulada)
FERROPHOSPHORUS	FERROPHOSPHORE	FERROFÓSFORO
Ferrophosphorus briquettes	Ferrophosphore en briquettes	Ferrofósforo, briquetas de
FERROSILICON UN 1408	FERROSILICIUM UN 1408	FERROSILICIO, UN 1408
FERROSILICON	FERROSILICIUM	FERROSILICIO
FERROUS METAL BORINGS UN 2793	ROGNURES DE MÉTAUX FERREUX UN 2793	VIRUTAS DE TALADRADO DE METALES FERROSOS, UN 2793
FERROUS METAL CUTTINGS UN 2793	EBARBURES DE METAUX FERREUX UN 2793	RECORTES DE METALES FERROSOS, UN 2793
FERROUS METAL SHAVINGS UN 2793	COPEAUX DE MÉTAUX FERREUX UN 2793	RASPADURAS DE METALES FERROSOS, UN 2793
FERROUS METAL TURNINGS UN 2793	TOURNURES DE MÉTAUX FERREUX UN 2793	VIRUTAS DE TORNEADO DE METALES FERROSOS, UN 2793

ENGLISH	FRENCH	SPANISH
FERROUS SULPHATE HEPTAHYDRATE	SULFATE FERREUX HEPTAHYDRATÉ	SULFATO FERROSO HEPTAHIDRATADO
FERTILIZERS WITHOUT NITRATES (non-hazardous)	ENGRAIS SANS NITRATES (non dangereux)	ABONOS SIN NITRATOS (no entrañan peligro)
FISH (IN BULK)	POISSON (EN VRAC)	PESCADO (A GRANEL)
FISHMEAL, STABILIZED UN 2216	FARINE DE POISSON STABILISÉE UN 2216	HARINA DE PESCADO ESTABILIZADA, UN 2216
FISHSCRAP, STABILIZED UN 2216	DÉCHETS DE POISSON STABILISÉS UN 2216	DESECHOS DE PESCADO ESTABILIZADOS, UN 2216
Flat iron	Fer plat	Hierro plano
Flint flat glass cullet	Calcin de verre de silex plat	Desperdicios gruesos de vidrio flint
FLUE DUST, CONTAINING LEAD AND ZINC	CENDRES VOLANTES CONTENANT DU PLOMB ET DU ZINC	POLVO DE LOS CONDUCTOS DE HUMOS QUE CONTIENE PLOMO Y CINC
FLUORSPAR	SPATH FLUOR	ESPATOFLÚOR
FLY ASH, DRY	CENDRES VOLANTES SÈCHES	CENIZAS VOLANTES SECAS
FLY ASH, WET	CENDRES VOLANTES HUMIDES	CENIZAS VOLANTES HÚMEDAS
FOAM GLASS GRAVEL	GRANULAT DE VERRE CELLULAIRE	GRAVA DE VIDRIO CELULAR
Foundry sand	Sable de fonderie	Arena de fundición
Galena (lead sulphide)	Galène (sulfure de plomb)	Galena (sulfuro de plomo)
Garbage tankage	Détritus organiques	Detritos orgánicos
GLASS CULLET	CALCIN DE VERRE	DESPERDICIOS DE VIDRIO
Gluten pellets	Gluten en boulettes	Gluten, pellets de
GRAIN SCREENING PELLETS	CRIBLURES DE GRAIN EN PELLETS	PELLETS DE GRANZA DE GRANO
GRANULAR FERROUS SULPHATE	SULFATE FERREUX EN GRANULES	SULFATO FERROSO GRANULAR
Granulated iron	Granulats ferreux	Hierro granulado
GRANULATED NICKEL MATTE (LESS THAN 2% MOISTURE CONTENT)	MATTE DE NICKEL EN GRANULES (TENEUR EN HUMIDITÉ INFÉRIEURE À 2%)	MATA DE NIQUEL GRANULADA (CONTENIDO DE HUMEDAD INFERIOR A 2%)
GRANULATED SLAG	SCORIES EN GRAINS	ESCORIA GRANULADA
GRANULATED TYRE RUBBER	CAOUTCHOUC DE PNEUS EN GRANULES	NEUMÁTICO GRANULADO
Ground nuts, meal	Farine d'arachide	Maní (cacahuetes), harina de
GYPSUM	GYPSE	YESO

ENGLISH	FRENCH	SPANISH
Hominy chop	Hominy chop	Sémola de maíz triturada
GYPSUM GRANULATED	GYPSE EN GRAINS	YESO GRANULADO
ILMENITE CLAY	ARGILE D'ILMÉNITE	ILMENITA, ARCILLA DE
ILMENITE (ROCK)	ILMÉNITE (ROCHE)	ILMENITA (ROCA)
ILMENITE SAND	SABLE D'ILMÉNITE	ILMENITA, ARENA DE
ILMENITE (UPGRADED)	ILMÉNITE VALORISÉE	ILMENITA (ENRIQUECIDA)
IRON AND STEEL SLAG AND ITS MIXTURE	SCORIES DE FER ET D'ACIER ET LEUR MÉLANGE	ESCORIA DE HIERRO Y ACERO Y SU MEZCLA
IRON CONCENTRATE	CONCENTRÉ DE FER	HIERRO, CONCENTRADO DE
IRON CONCENTRATE (pellet feed)	CONCENTRÉ DE FER (pour pellets)	HIERRO, CONCENTRADO DE (para pellets)
IRON CONCENTRATE (sinter feed)	CONCENTRÉ DE FER (pour agglomérés)	HIERRO, CONCENTRADO DE (para aglomerados)
Iron disulphide	Disulfure de fer	Disulfuro de hierro
IRON ORE	MINERAI DE FER	HIERRO, MINERAL DE
Iron ore (concentrate, pellet feed, sinter feed)	Minerai de fer (concentré, pour pellets, pour agglomérés)	Hierro, mineral de (concentrado, aglomerados o pellets)
IRON ORE FINES	FINES DE MINERAI DE FER	FINOS DE MINERAL DE HIERRO
IRON ORE PELLETS	MINERAI DE FER EN PELLETS	HIERRO, PELLETS DE MINERAL DE
IRON OXIDE, SPENT UN 1376	OXYDE DE FER RÉSIDUAIRE UN 1376	ÓXIDO DE HIERRO AGOTADO, UN 1376
IRON OXIDE TECHNICAL	OXYDE DE FER DE QUALITÉ TECHNIQUE	OXIDO DE HIERRO (GRADO TÉCNICO)
Iron pan edges	Fer en forme de poêles dit «iron pan edges»	Bordes de bandejas de hierro
Iron silicate granulated	Silicate de fer en grains	Silicato de hierro granulado
IRON SINTER	AGGLOMÉRÉS DE FER	HIERRO SINTERIZADO
Iron skulls	Fer en forme de crânes dit «iron skulls»	Hierro en forma de cráneos conocido como «iron skulls»
IRON SMELTING BY-PRODUCTS	SOUS-PRODUITS DE LA FUSION DU FER	PRODUCTOS DERIVADOS DE LA FUNDICIÓN DEL HIERRO
Iron swarf	Copeaux de fer	Hierro, virutas de
IRON SPONGE, SPENT UN 1376	TOURNURE DE FER RÉSIDUAIRE UN 1376	ESPONJA DE HIERRO AGOTADA, UN 1376
IRONSTONE	ROCHE FERRUGINEUSE	ROCA FERRUGINOSA
K1-K3 bears	Pièces en forme d'ours des groupes K1-K3 dites "bears"	Cuescos K1 – K3
LABRADORITE	LABRADOR	LABRADORITA

ENGLISH	FRENCH	SPANISH
LEAD AND ZINC CALCINES (mixed)	PLOMB ET ZINC CALCINÉS (en mélange)	PLOMO Y CINC, CALCINADOS DE (en mezclas)
LEAD AND ZINC MIDDLINGS	MIXTES DE PLOMB ET DE ZINC	PLOMO Y CINC, MIXTOS DE
LEAD CONCENTRATE	CONCENTRÉ DE PLOMB	PLOMO, CONCENTRADO DE
LEAD NITRATE UN 1469	NITRATE DE PLOMB UN 1469	NITRATO DE PLOMO, UN 1469
LEAD ORE	MINERAI DE PLOMB	PLOMO, MINERAL DE
Lead ore concentrate	Concentré de minerai de plomb	Plomo, concentrado de mineral de
LEAD ORE RESIDUE	RÉSIDU DE MINERAI DE PLOMB	PLOMO, RESIDUOS DE MINERAL DE
LEAD SILVER CONCENTRATE	CONCENTRÉ DE PLOMB ARGENTIFÈRE	PLOMO Y PLATA, CONCENTRADO DE
Lead silver ore	Minerai de plomb argentifère	Plomo y plata, mineral de
Lead sulphide	Sulfure de plomb	Sulfuro de plomo
Lead sulphide (galena)	Sulfure de plomb (galène)	Sulfuro de plomo (galena)
Lignite	Lignite	Lignita
LIME (UNSLAKED)	CHAUX (VIVE)	CAL (VIVA)
LIMESTONE	CALCAIRE	PIEDRA CALIZA
LINTED COTTON SEED	GRAINES DE COTONNIER AVEC LINTER	SEMILLAS DE ALGODÓN DESPEPITADO
Linseed, expelled	Graines de lin, triturées	Linaza, prensada
Linseed, extracted	Graines de lin, sous-produits de l'extraction	Linaza, en extracto
LOGS	GRUMES	TRONCOS
MAGNESIA (DEADBURNED)	MAGNÉSIE (CALCINÉE)	MAGNESIA (CALCINADA A MUERTE)
MAGNESIA (UNSLAKED)	MAGNÉSIE (VIVE)	MAGNESIA (VIVA)
Magnesia, clinker	Magnésie en clinkers	Magnesia, clinker de
Magnesia, electro-fused	Magnésie électrofondue	Magnesia electrofundida
Magnesia, lightburned	Magnésie calcinée légère	Magnesia quemada ligeramente
Magnesia, calcined	Magnésie calcinée	Magnesia calcinada
Magnesia, caustic calcined	Magnésie calcinée caustique	Magnesia cáustica calcinada
Magnesite, clinker	Magnésite, clinkers de	Magnesita, clinker de
MAGNESITE, natural	MAGNÉSITE, naturelle	MAGNESITA natural
Magnesium carbonate	Carbonate de magnésium	Carbonato de magnesio
MAGNESIUM NITRATE UN 1474	NITRATE DE MAGNÉSIUM UN 1474	NITRATO DE MAGNESIO, UN 1474
MAGNESIUM SULPHATE FERTILIZERS	ENGRAIS AU SULFATE DE MAGNÉSIUM	ABONOS DE SULFATO DE MAGNESIO
Maize, expelled	Maïs, trituré	Maíz, prensado

ENGLISH	FRENCH	SPANISH
Maize, extracted	Maïs, sous-produit de l'extraction	Maíz, en extracto
MANGANESE COMPONENT FERROALLOY SLAG	SCORIES DE FERRO-ALLIAGES DE MANGANÈSE	ESCORIA DE ALEACIÓN DE HIERRO CON MANGANESO
MANGANESE CONCENTRATE	CONCENTRÉ DE MANGANÈSE	MANGANESO, CONCENTRADO DE
MANGANESE ORE	MINERAI DE MANGANÈSE	MANGANESO, MINERAL DE
MANGANESE ORE FINES	FINES DE MINERAI DE MANGANÈSE	FINOS DE MINERAL DE MANGANESO
M.A.P.	[not applicable in French]	FMA
MARBLE CHIPS	ÉCLATS DE MARBRE	MÁRMOL, ASTILLAS DE
MATTE CONTAINING COPPER AND LEAD	MATTE CONTENANT DU CUIVRE ET DU PLOMB	MATA QUE CONTIENE COBRE Y PLOMO
Meal, oily	Farines oléagineuses	Harina oleosa
METAL SULPHIDE CONCENTRATES	CONCENTRÉS DE SULFURES MÉTALLIQUES	SULFUROS METÁLICOS, CONCENTRADOS DE
METAL SULPHIDE CONCENTRATES, CORROSIVE UN 1759	CONCENTRÉS DE SULFURES MÉTALLIQUES, CORROSIFS, UN 1759	CONCENTRADOS DE SULFUROS METÁLICOS, CORROSIVOS, UN 1759
METAL SULPHIDE CONCENTRATES, SELF-HEATING UN 3190	CONCENTRÉS DE SULFURES MÉTALLIQUES, AUTOÉCHAUFFANTS UN 3190	CONCENTRADOS DE SULFUROS METÁLICOS QUE EXPERIMENTAN CALENTAMIENTO ESPONTÁNEO, UN 3190
Mill feed pellets	Sous-produits de meunerie en boulettes	Piensos, pellets de
Milorganite	Milorganite	Milorganita
Mineral Concentrates	Concentrés de minerais	Concentrados de minerales
MONOAMMONIUM PHOSPHATE	MONOPHOSPHATE D'AMMONIUM	FOSFATO MONOAMÓNICO
MONOAMMONIUM PHOSPHATE (M.A.P.), MINERAL ENRICHED COATING	MONOPHOSPHATE D'AMMONIUM, REVÊTEMENT ENRICHI EN MINÉRAUX	FOSFATO MONOAMÓNICO, REVESTIMIENTO ENRIQUECIDO CON MINERALES
MONOCALCIUMPHOSPHATE (MCP)	PHOSPHATE MONOCALCIQUE	FOSFATO MONOCÁLCICO
Muriate of potash	Muriate de potasse	Muriato de potasa
NEFELINE SYENITE (mineral)	SYÉNITE NÉPHÉLINIQUE (minerai)	SIENITA NEFELÍNICA (mineral)
NICKEL ORE	MINERAI DE NICKEL	MINERAL DE NÍQUEL

ENGLISH	FRENCH	SPANISH
NICKEL CONCENTRATE	CONCENTRÉ DE NICKEL	NÍQUEL, CONCENTRADO DE
Nickel ore concentrate	Concentré de minerai de nickel	Níquel, concentrado de mineral de
Niger seed, expelled	Graines de niger, triturées	Níger, semillas de, prensadas
Niger seed, extracted	Graines de niger, sous-produits de l'extraction	Níger, semillas de, en extracto
Oil cake	Tourteaux oléagineux	Torta oleaginosa
OLIVINE GRANULAR AND GRAVEL AGGREGATE PRODUCTS	AGRÉGATS DE GRAINS ET DE GRAVIERS D'OLIVINE	PRODUCTOS AGREGADOS GRANULARES Y DE GRAVA DE OLIVINO
OLIVINE SAND	SABLE D'OLIVINE	ARENA DE OLIVINO
Palm kernel, expelled	Amande de palmiste, triturée	Nuez de palma, prensada
Palm kernel, extracted	Amande de palmiste, sous-produit de l'extraction	Nuez de palma, en extracto
Peanuts, expelled	Cacahuètes, triturées	Cacahuetes (maní), prensados
Peanuts, extracted	Cacahuètes, sous-produits de l'extraction	Cacahuetes (maní), en extracto
PEANUTS (in shell)	CACAHUÈTES (en coques)	CACAHUETES (con vaina)
PEAT MOSS	TOURBE HORTICOLE	TURBA FIBROSA
PEBBLES (sea)	GALETS (de mer)	CANTOS RODADOS (de mar)
PELLETS (concentrates)	PELLETS (concentrés)	PELLETS (concentrados)
Pellets (cereal)	Céréales en boulettes	Cereales, pellets de
Pencil pitch	Brai en crayons	Brea en lápices
PENTAHYDRATE CRUDE	PENTAHYDRATE BRUT	PENTAHIDRATO EN BRUTO
PERLITE ROCK	ROCHE PERLITE	PERLITA, ROCA DE
PETROLEUM COKE (calcined)	COKE DE PÉTROLE (calciné)	COQUE DE PETRÓLEO (calcinado)
PETROLEUM COKE (uncalcined)	COKE DE PÉTROLE (non calciné)	COQUE DE PETROLEO (no calcinado)
PHOSPHATE ROCK (calcined)	ROCHE PHOSPHATÉE (calcinée)	FOSFATO EN ROCA (calcinado)
PHOSPHATE ROCK (uncalcined)	ROCHE PHOSPHATÉE (non calcinée)	FOSFATO EN ROCA (no calcinado)
PHOSPHATE (defluorinated)	PHOSPHATE (défluoré)	FOSFATO (desfluorado)
PIG IRON	FONTE EN GUEUSES	HIERRO EN LINGOTES
Pig iron by-product	Sous-produits de la fonte brute	Productos derivados del hierro en lingotes
PITCH PRILL	BRAI EN GRAINS	BREA EN BOLITAS

ENGLISH	FRENCH	SPANISH
Plate iron	Plaques de fer	Placas de hierro
Pollard pellets	Recoupette en boulettes	Moyuelo, pellets de
Pool iron	Résidus de hauts fourneaux	Residuos de altos hornos
POTASH	POTASSE	POTASA
Potash muriate	Muriate de potasse	Muriato de potasa
POTASSIUM CHLORIDE	CHLORURE DE POTASSIUM	CLORURO POTÁSICO
Potassium felspar sand	Sable de feldspath potassique	Arena de feldespato potásico
POTASSIUM NITRATE UN 1486	NITRATE DE POTASSIUM UN 1486	NITRATO POTÁSICO, UN 1486
Potassium nitrate/sodium nitrate (mixture)	Nitrate de potassium/nitrate de sodium (en mélange)	Nitrato potásico y nitrato sódico, mezclas de
POTASSIUM NITRATE MIXTURE	NITRATE DE POTASSIUM EN MÉLANGE	NITRATO POTÁSICO EN MEZCLA
POTASSIUM SULPHATE	SULFATE DE POTASSIUM	SULFATO DE POTASIO
Prilled coal tar	Goudron de houille en grains	Alquitrán de hulla en bolitas
PULP WOOD	BOIS À PÂTE	MADERA PARA PASTA PAPELERA
PUMICE	PONCE	PIEDRA PÓMEZ
PYRITE (containing copper and iron)	PYRITE (contenant du cuivre et du fer)	PIRITA (contiene cobre y hierro)
PYRITES, CALCINED	PYRITES CALCINÉES	PIRITAS CALCINADAS
PYRITES	PYRITES	PIRITAS
Pyrites (cupreous, fine, flotation, or sulphur)	Pyrites (cuivreuses, fines, flottation, soufre)	Piritas (cuprosas, disgregadas, flotación o azufre)
Pyritic ash	Cendres pyriteuses	Cenizas piríticas
PYRITIC ASHES (iron)	CENDRES PYRITEUSES (fer)	CENIZAS PIRITOSAS (hierro)
PYRITIC CINDERS	CENDRES PYRITEUSES	ESCORIAS PIRITOSAS
PYROPHYLLITE	PYROPHYLLITE	PIROFILITA
QUARTZ	QUARTZ	CUARZO
Quartz sand	Sable quartzeux	Arena de cuarzo
QUARTZITE	QUARTZITE	CUARCITA
Quicklime	Chaux vive	Cal viva
RADIOACTIVE MATERIAL, LOW SPECIFIC ACTIVITY (LSA-I) UN 2912	MATIÈRES RADIOACTIVES DE FAIBLE ACTIVITÉ SPÉCIFIQUE (LSA-I) UN 2912	MATERIALES RADIACTIVOS, DE BAJA ACTIVIDAD ESPECÍFICA (BAE-I),UN 2912

ENGLISH	FRENCH	SPANISH
RADIOACTIVE MATERIAL, SURFACE CONTAMINATED OBJECTS (SCO-I) UN 2913	MATIÈRES RADIOACTIVES, OBJETS CONTAMINÉS SUPERFICIELLEMENT (SCO-I) UN 2913	MATERIALES RADIACTIVOS, OBJETOS CONTAMINADOS EN LA SUPERFICIE (OCS-I), UN 2913
Rape seed, expelled	Graines de colza, triturées	Semillas de colza, prensadas
Rape seed, extracted	Graines de colza, sous-produits de l'extraction	Semillas de colza, en extracto
RASORITE (ANHYDROUS)	RASORITE (ANHYDRE)	RASORITA (ANHIDRA)
Rice bran	Son de riz	Arroz, salvado de
Rice broken	Brisures de riz	Arroz partido
Rough ammonia tankage	Déchets organiques ammoniacaux	Amonio en bruto, desechos orgánicos de
ROUNDWOOD	RONDINS	ROLLIZOS
RUTILE SAND	SABLE DE RUTILE	RUTILO, ARENA DE
Safflower seed, expelled	Graines de carthame, triturées	Cártamo, semillas de, prensadas
Safflower seed, extracted	Graines de carthame, sous-produits de l'extraction	Cártamo, semillas de, en extracto
SALT	SEL	SAL
SALT CAKE	PAIN DE SEL	SAL, TORTA DE
SALT ROCK	ROCHE SALINE	SAL GEMA
Saltpetre	Salpêtre	Salitre
SAND	SABLE	ARENA
SAND, HEAVY MINERAL	SABLES MINÉRAUX LOURDS	ARENAS DE MINERALES PESADOS
Sand, ilmenite	Sable, ilménite	Arena de ilmenita
SAND, MINERAL CONCENTRATE, RADIOACTIVE MATERIAL, LOW SPECIFIC ACTIVITY (LSA-I) UN 2912	MATIÈRES RADIOACTIVES DE FAIBLE ACTIVITÉ SPÉCIFIQUE (LSA-I), SABLES, CONCENTRÉS DE MINÉRAUX UN 2912	ARENAS DE CONCENTRADOS DE MINERALES, MATERIAL RADIACTIVO DE BAJA ACTIVIDAD ESPECÍFICA (BAE-I), UN 2912
Sand, zircon	Sable, zircon	Arena de circonio
SAWDUST	SCIURE DE BOIS	SERRÍN
SAW LOGS	BOIS DÉBITÉ	TRONCOS PARA ASERRAR
SCALE GENERATED FROM THE IRON AND STEEL MAKING PROCESS	DÉPÔTS PROVENANT DE LA FABRICATION DU FER ET DE L'ACIER	CASCARILLA GENERADA DE LOS PROCESOS SIDERÚRGICOS
SCRAP METAL	FERRAILLE	CHATARRA

ENGLISH	FRENCH	SPANISH
SEED CAKE, containing vegetable oil UN 1386 (a) mechanically expelled seeds, containing more than 10% of oil or more than 20% of oil and moisture combined	TOURTEAUX contenant de l'huile végétale UN 1386 a) Graines triturées par procédé mécanique contenant plus de 10 % d'huile ou plus de 20 % d'huile et d'humidité combinées	TORTA DE SEMILLAS, con una proporción de aceite vegetal, UN 1386 a) residuos de semillas prensadas por medios mecánicos, con un contenido de más del 10% de aceite o más del 20% de aceite y humedad combinados
SEED CAKE, containing vegetable oil UN 1386 (b) solvent extraction and expelled seeds, containing not more than 10% of oil and when the amount of moisture is higher than 10%, not more than 20% of oil and moisture combined	TOURTEAUX contenant de l'huile végétale UN 1386 b) Sous-produits de l'extraction au solvant ou graines triturées contenant au maximum 10 % d'huile et, si la teneur en humidité est supérieure à 10%, pas plus de 20 % d'huile et d'humidité combinées	TORTA DE SEMILLAS, con una proporción de aceite vegetal, UN 1386 b) residuos de la extracción del aceite de las semillas con disolventes o por prensado, con un contenido de no más del 10% de aceite o, si el contenido de humedad es superior al 10%, no más del 20% de aceite y humedad combinados
SEED CAKE UN 2217	TOURTEAUX UN 2217	TORTA DE SEMILLAS, UN 2217
SEED CAKES AND OTHER RESIDUES OF PROCESSED OILY VEGETABLES	TOURTEAUX ET AUTRES RÉSIDUS DE VÉGÉTAUX HUILEUX TRAITÉS	TORTAS DE SEMILLAS Y OTROS RESIDUOS DE PLANTAS OLEAGINOSAS PROCESADAS
Seed expellers, oily	Expellers oléagineux	Semillas oleosas, torta de presión de
Separation of iron	Résidus du processus de séparation	Hierro de separación
Silica sand	Sable siliceux	Arena de sílice
SILICOMANGANESE (carbo-thermic)	SILICOMANGANÈSE (carbothermique)	SILICOMANGANESO (carbotérmico)
SILICOMANGANESE (low carbon)	SILICOMANGANÈSE (à faible teneur en carbone)	SILICOMANGANESO (bajo contenido de carbono)
Silicon dross	Crasses de silicium	Espuma de silicio
SILICON SLAG	SCORIES DE SILICIUM	ESCORIA DE SILICIO
SILVER LEAD CONCENTRATE	CONCENTRÉ DE PLOMB ARGENTIFÈRE	PLATA Y PLOMO, CONCENTRADO DE
Silver lead ore concentrate	Concentré de minerai de plomb argentifère	Plata y plomo, concentrado de mineral de
Sinter	Agglomérés	Sinterizado

ENGLISH	FRENCH	SPANISH
Slag, granulated	Scories, en grains	Escoria granulada
SLIG, iron ore	SLIG (minerai de fer)	SLIG (mineral de hierro)
SODA ASH	SOUDE DU COMMERCE	SOSA, CENIZA DE
Soda felspar sand	Sable de feldspath sodique	Arena de feldespato sódico
SODIUM NITRATE UN 1498	NITRATE DE SODIUM UN 1498	NITRATO SÓDICO, UN 1498
SODIUM NITRATE AND POTASSIUM NITRATE MIXTURE UN 1499	NITRATE DE SODIUM ET NITRATE DE POTASSIUM EN MÉLANGE UN 1499	NITRATO SODICO Y NITRATO POTÁSICO, EN MEZCLA, UN 1499
SOLIDIFIED FUELS RECYCLED FROM PAPER AND PLASTICS	COMBUSTIBLES SOLIDIFIÉS RECYCLÉS À PARTIR DE PAPIER ET DE PLASTIQUE	COMBUSTIBLES SOLIDIFICADOS RECICLADOS DE PAPELES Y PLÁSTICOS
Soyabean, expelled	Graines de soja, triturées	Soja, prensada
Soyabean, extracted	Graines de soja, sous-produits de l'extraction	Soja, en extracto
Spent cathodes	Cathodes usées	Cátodos agotados
Spent potliner	Revêtement usé des cuves	Cubas electrolíticas agotadas
Spodumene	Spodumène	Espodumeno
SPODUMENE (UPGRADED)	SPODUMÈNE (ENRICHI)	ESPODUMENO (ENRIQUECIDO)
STAINLESS STEEL GRINDING DUST	ACIER INOXYDABLE, POUSSIÈRE DE MEULAGE	ACERO INOXIDABLE, POLVO DEL RECTIFICADO DE
Steel bears	Pièces d'acier en forme d'ours dites "steel bears"	Cuescos de acero
Steel swarf	Rognures d'acier	Acero, virutas de
Stibnite	Stibnite	Estibina
STONE CHIPPINGS	PIERRES CONCASSÉES	GRAVILLA
Strussa pellets	Strussa en boulettes	Strussa, pellets de
SUGAR	SUCRE	AZÚCAR
SUGARCANE BIOMASS PELLETS	BIOMASSE DE LA CANNE A SUCRE EN PELLETS	PELLETS DE BIOMASA DE CAÑA DE AZÚCAR
SULPHATE OF POTASH AND MAGNESIUM	SULFATE DE POTASSIUM ET DE MAGNÉSIUM	SULFATO DE POTASA Y MAGNESIO
Sulphide concentrates	Concentrés sulfurés	Sulfuros, concentrados de
SULPHUR UN 1350 (crushed lump and coarse grained)	SOUFRE UN 1350 (concassé en morceaux et en poudre à gros grains)	AZUFRE, UN 1350 (en terrones triturados o en polvo de grano grueso)
SULPHUR (formed, solid)	SOUFRE (solide, moulé)	AZUFRE (sólido con forma)
Sunflower seed, expelled	Graines de tournesol, triturées	Girasol, semillas de, prensadas

ENGLISH	FRENCH	SPANISH
Sunflower seed, extracted	Graines de tournesol, sous-produits de l'extraction	Girasol, semillas de, en extracto
SUPERPHOSPHATE	SUPERPHOSPHATE	SUPERFOSFATO
SUPERPHOSPHATE (triple, granular)	SUPERPHOSPHATE (triple, granuleux)	SUPERFOSFATO (triple granular)
Swarf	Rognures	Virutas
SYNTHETIC CALCIUM FLUORIDE	FLUORURE DE CALCIUM DE SYNTHÈSE	FLUORURO DE CALCIO SINTÉTICO
SYNTHETIC SILICON DIOXIDE	DIOXYDE DE SILICONE DE SYNTHÈSE	DIÓXIDO DE SILICIO SINTÉTICO
TACONITE PELLETS	TACONITE EN PELLETS	TACONITA, PELLETS DE
TALC	TALC	TALCO
TANKAGE	DÉCHETS ORGANIQUES	DESECHOS ORGÁNICOS
Tankage fertilizer	Engrais à base de déchets organiques	Fertilizante orgánico
TAPIOCA	TAPIOCA	TAPIOCA
TIMBER	BILLES DE BOIS	MADERAJE
TITANOMAGNETITE SAND	SABLE TITANOMAGNÉTITE	ARENA DE TITANOMAGNETITA
Toasted meals	Farines grillées	Harinas tostadas
Triple superphosphate	Superphosphate triple	Superfosfato triple
UREA	URÉE	UREA
VANADIUM ORE	MINERAI DE VANADIUM	VANADIO, MINERAL DE
VERMICULITE	VERMICULITE	VERMICULITA
WHITE QUARTZ	QUARTZ BLANC	CUARZO BLANCO
WOODCHIPS	COPEAUX DE BOIS	MADERA, ASTILLAS DE
WOOD PELLETS CONTAINING ADDITIVES AND/OR BINDERS	GRANULÉS (PELLETS) DE BOIS CONTENANT DES ADDITIFS ET/OU LIANTS	PELLETS DE MADERA QUE CONTIENEN ADITIVOS Y/O AGLUTINANTES
WOOD PELLETS NOT CONTAINING ANY ADDITIVES AND/OR BINDERS	GRANULÉS (PELLETS) DE BOIS NE CONTENANT AUCUN ADDITIF OU LIANT	PELLETS DE MADERA QUE NO CONTIENEN ADITIVOS NI AGLUTINANTES
Wood Products – General	Produits du bois – Généralités	Productos generales de madera
WOOD TORREFIED	BOIS TORRÉFIÉ	MADERA TORRADA
ZINC AND LEAD CALCINES (mixed)	ZINC ET PLOMB CALCINÉS (en mélange)	CINC Y PLOMO, CALCINADOS DE (en mezclas)
ZINC AND LEAD MIDDLINGS	MIXTES DE ZINC ET DE PLOMB	CINC Y PLOMO, MIXTOS DE

ENGLISH	FRENCH	SPANISH
ZINC ASHES UN 1435	CENDRES DE ZINC UN 1435	CINC, CENIZAS DE, UN 1435
ZINC CONCENTRATE	CONCENTRÉ DE ZINC	CINC, CONCENTRADO DE
Zinc, dross, residue or skimmings	Zinc, crasses, résidus, laitier	Cinc (desechos de, residuos de o espuma de)
Zinc ore, burnt	Minerai de zinc, brûlé	Cinc, mineral quemado de
Zinc ore, calamine	Minerai de zinc, calamine	Cinc, mineral de, calamina
Zinc ore, concentrates	Minerai de zinc, concentrés	Cinc, mineral de, concentrados
Zinc ore, crude	Minerai de zinc, brut	Cinc, mineral de, bruto
ZINC OXIDE ENRICHED FLUE DUST	CENDRES VOLANTES ENRICHIES AUX OXYDES DE ZINC	POLVO DE LOS CONDUCTOS DE HUMOS ENRIQUECIDO CON OXIDO DE CINC
ZINC SINTER	AGGLOMÉRÉS DE ZINC	CINC SINTERIZADO
ZINC SLAG	SCORIES DE ZINC	CINC, ESCORIA DE
ZINC SLUDGE	BOUES DE ZINC	CINC, FANGOS DE
Zinc sulphide	Sulfure de zinc	Sulfuro de cinc
Zinc sulphide (blende)	Sulfure de zinc (blende)	Sulfuro de cinc (blenda)
ZIRCON KYANITE CONCENTRATE	CONCENTRÉ DE KYANITE ET DE ZIRCON	CONCENTRADO DE CIANITA DE CIRCONIO
ZIRCONSAND	SABLE DE ZIRCON	CIRCONIO, ARENA DE

"